This is a digital copy of a book that was preserved for generations on library shelves before it was carefully scanned by Google as part of a project to make the world's books discoverable online.

It has survived long enough for the copyright to expire and the book to enter the public domain. A public domain book is one that was never subject to copyright or whose legal copyright term has expired. Whether a book is in the public domain may vary country to country. Public domain books are our gateways to the past, representing a wealth of history, culture and knowledge that's often difficult to discover.

Marks, notations and other marginalia present in the original volume will appear in this file - a reminder of this book's long journey from the publisher to a library and finally to you.

Usage guidelines

Google is proud to partner with libraries to digitize public domain materials and make them widely accessible. Public domain books belong to the public and we are merely their custodians. Nevertheless, this work is expensive, so in order to keep providing this resource, we have taken steps to prevent abuse by commercial parties, including placing technical restrictions on automated querying.

We also ask that you:

+ *Make non-commercial use of the files* We designed Google Book Search for use by individuals, and we request that you use these files for personal, non-commercial purposes.

+ *Refrain from automated querying* Do not send automated queries of any sort to Google's system: If you are conducting research on machine translation, optical character recognition or other areas where access to a large amount of text is helpful, please contact us. We encourage the use of public domain materials for these purposes and may be able to help.

+ *Maintain attribution* The Google "watermark" you see on each file is essential for informing people about this project and helping them find additional materials through Google Book Search. Please do not remove it.

+ *Keep it legal* Whatever your use, remember that you are responsible for ensuring that what you are doing is legal. Do not assume that just because we believe a book is in the public domain for users in the United States, that the work is also in the public domain for users in other countries. Whether a book is still in copyright varies from country to country, and we can't offer guidance on whether any specific use of any specific book is allowed. Please do not assume that a book's appearance in Google Book Search means it can be used in any manner anywhere in the world. Copyright infringement liability can be quite severe.

About Google Book Search

Google's mission is to organize the world's information and to make it universally accessible and useful. Google Book Search helps readers discover the world's books while helping authors and publishers reach new audiences. You can search through the full text of this book on the web at `http://books.google.com/`

Digitized by Google

Digitized by Google

Digitized by Google

THE THEORY AND DESIGN OF STRUCTURES.

Digitized by Google

Digitized by Google

THE
THEORY AND DESIGN
OF
STRUCTURES.

A TEXT-BOOK

For the use of Students, Draughtsmen, and Engineers engaged in Constructional Work.

BY

EWART S. ANDREWS, B.Sc. Eng. (Lond.)

Late Demonstrator & Lecturer in the Engineering Department of University College, London; Lecturer in Theory & Design of Structures at the Goldsmiths' College, New Cross.

WITH NUMEROUS ILLUSTRATIONS
AND WORKED EXAMPLES.

LONDON: CHAPMAN & HALL, LTD.
11 HENRIETTA STREET, W.C.
1908.

ALL RIGHTS RESERVED.

Digitized by Google

LONDON:
PRINTED BY STRANGEWAYS AND SONS, TOWER STREET,
CAMBRIDGE CIRCUS, W.C.

Digitized by Google

136281
DEC 7 1909
C P
.AN3
L24 7576

PREFACE.

IF any excuse be needed for adding to the list—already long—of text-books dealing with engineering science, the author would urge that in teaching experience he has found considerable difficulty in finding a book to recommend to his students which covered a sufficiently wide ground, and which was, at the same time, of reasonable price, and written so as to be sound as regards the theory, and yet sufficiently practical and free from advanced mathematics to make it of use to the greater number of draughtsmen and engineers.

The size of this book makes many of the figures of little or no use for scaling from in the graphical construction. The author wishes to impress on students the absolute necessity of drawing the various figures to a good scale; to read the book without going through the construction is practically useless except for revision purposes. The author also wishes to recommend his readers to read through the worked examples, which are rather a feature of the book. Many points are explained in such examples which are not dealt with elsewhere.

The present text-book, like many of its predecessors, is based on the lecture-notes used by the author in his classes, and these in their turn were largely obtained from notes taken in Professor Karl Pearson's Graphics lectures at University College, London, and from examples in actual practice. Although a mathematical treatment of many of the problems has been given, the book is written largely from the graphical standpoint. This does not mean that all the problems are solved on the drawing-board; in

Digitized by Google

many cases the graphical construction for a general problem has been given, and by reasoning from such construction formulæ have been deduced for the special cases. This will be found to be especially the case in Chapters VIII. and IX., where all the ordinary formulæ for deflections and fixed and continuous beams are deduced from the graphical constructions. There seems to the author to be a greater value in this method of treatment than in many mere graphical artifices for making calculations, because the reasoning powers are developed just (or nearly just) as well as in the methods involving the calculus. Moreover, in spite of the large number of books written to make the calculus simple for engineers, engineers somehow have not yet learnt to reason in its terms, so that many of them have to turn to the graphical aspect.

The book contains some matter which the author does not believe to be in English text-books in common use. Among this mention might be made of the French or St. Venant method of dealing with combined bending and shear strains; the general theory of curved beams and of non-symmetrical beams; the strength of heterogeneous structures such as reinforced concrete: a special effort has been made to make the chapter on struts and columns clear, difficulty being commonly experienced in this subject.

Although the author hopes that the book will be especially useful for students reading for the Assoc. M. Inst. C.E. examination and University degree examinations in Engineering, he has attempted to present the subject in sufficiently practical form for it to be of assistance to all engineers and draughtsmen engaged in constructional work, and has included a number of working drawings.

The author desires to express his gratitude and thanks to Professors Karl Pearson, F.R.S., and J. D. Cormack, B.Sc., for valuable help and kindness throughout the author's career, and to

Digitized by Google

Mr. W. J. Lineham, B.Sc., M.I.C.E., for his generous help in the production of the book. He desires also to thank the many firms that have helped him by supplying information and illustrations, and also the editors of *Engineering*, *The Engineering Review*, and *The Builders' Journal*, for permission to reproduce the illustrations with their respective names appended, and in some cases for the description relative thereto.

Most of the calculations in the book have been made only to the same degree of accuracy as that of which graphical constructions are capable—viz., about one per cent.

The author will be grateful for the notification of clerical and other errors that may be found in the book.

EWART S. ANDREWS.

Goldsmiths' College, New Cross, S.E.
October 1908.

Digitized by Google

Digitized by Google

CONTENTS.

ERRATA.

Page 53. Fig. 16. The force 4, 5 should be parallel to 4, 5 on the vector polygon.

„ 85. Line 11, should read

$$\therefore I_{cc} = \frac{6 \times 3{\cdot}658^3}{3} - \frac{5 \times 2{\cdot}158^3}{3} + \ldots .$$

„ 85. 4th line from bottom, should read $\frac{2 \times 12 \times 1^3}{12} = 2$. This makes total 963.9.

„ 95. 2nd line from bottom, substitute A A for B B.

„ 96. Line 12, substitute B B for A A.

„ 102. Line 5, substitute 'notch' for 'cleat.'

„ 108. 9th line from bottom, should read: ∴ B.M. diagram is a curve, &c.

„ 146. Line 3, substitute B_2 C for C_2 A.

„ 300. Fig. 128. *b'* should coincide with *a'*, and *b* with *a*. This will affect subsequent points.

„ 303. Fig. 132. *l* should be shown coinciding with 5, not with *k*.

„ 337. 5th line from bottom, substitute π^2 for π^3.

„ 510. Fig. 245*a*. The left-hand dimension should be ·625.

„ 525. Fig. 252*a* should refer to Fig. 251, not Fig. 252.

„ 561. The last load should be 54,900 lb. The load scale should be 1″ = 10,000 lb.

„ 573. Question 9. Depth of girder = 12 ft., not 212 ft.

Digitized by Google

Digitized by Google

CONTENTS.

CHAPTER I.

PAGE

STRESS, STRAIN, AND ELASTICITY 1

Kinds of stresses and strains—Stress-strain diagrams—Elastic moduli or constants and the relations between them—Principal stresses—Ellipse of stress—Maximum strain due to combined direct and shear strains—Wöhler's experiments and repetitions of stress—Stresses due to sudden loading—Stresses due to impact—Stresses in heterogeneous bars.

CHAPTER II.

PRINCIPLES OF DESIGN; WORKING STRESSES, &C.; WIND PRESSURE 41

Commercial and scientific aspects of design—Working stresses and factor of safety; allowance for live loads—Wind pressure; Forth Bridge experiments—Wind on inclined surfaces—Board of Trade recommendations.

CHAPTER III.

FORCES, AREAS, AND MOMENTS 52

Laws of vector addition—Link and vector polygon construction—Resolution of forces—Determination of areas; sum curves; Simpson's and Parmontier's rules—First moments—Second moments or moments of inertia; momental ellipse—Graphical determination of first and second moments—Formulæ for standard cases.

CHAPTER IV.

RIVETED JOINTS AND CONNECTIONS 89

Form of rivets and joints—Methods of failure—Efficiency of joint—Practical considerations; drilling and punching; standard spacing; cleat connections for I beams.

Digitized by Google

CHAPTER V.

PAGE
BENDING MOMENTS AND SHEARING FORCES IN BEAMS . 105

Cantilevers and simply supported beams; standard cases - Graphical construction—Relation between load, shear, and B.M. diagrams—B.M. and shear curves for ships—Sloping beams and beams with inclined loads—Line of pressure.

CHAPTER VI.

STRESSES IN BEAMS 143

Neutral axis—Assumptions in ordinary theory—Moment of resistance and modulus—Influence of shearing force on stresses—General case of stresses in beams—Curved beams—Combined bending and direct stresses—Approximate modulus for I sections—Discrepancies between theory and practice.

CHAPTER VII.

BENDING MOMENTS AND SHEARING FORCES FOR ROLLING LOADS 178

Curves of maximum shear and B.M.—Isolated load and two isolated loads crossing a span—Uniform load crossing a span; two cases—General case of rolling loads; graphical construction.

CHAPTER VIII.

DEFLECTIONS OF BEAMS 199

General relation in bending—Curvature—Möhr's Theorem and graphical investigation of general and standard cases—Mathematical investigation of standard cases—Allowance for variation of cross section—Deflection for isolated load placed anywhere.

CHAPTER IX.

FIXED AND CONTINUOUS BEAMS 226

Effect of fixing and continuity—Fixed beams with uniform, central, and uniformly increasing loads—Fixed beams with a symmetrical loading—Continuous beam of two equal spans—Effect of lowering central support—Theorem of three moments—Table of results for equal spans and uniform loads—Graphical treatment of continuous beams.

Digitized by Google

CHAPTER X.

PAGE
DISTRIBUTION OF SHEARING STRESSES IN BEAMS. . . . 272

Horizontal shear — Distribution of shear for standard cases — Graphical treatment — Deflection due to shear — Strain of cross section of beam due to shear.

CHAPTER XI.

FRAMED STRUCTURES 289

Theoretical frames—Firm, deficient, and redundant frames—Reciprocal figures — Distinction between ties and struts — Stress diagrams for wind pressure—Method of moments—Resolution method—Local bending in framed structures—Rolling loads on framed bridges—Stresses from line of pressure—Superposed frames—Various forms of trusses.

CHAPTER XII.

COLUMNS, STANCHIONS, AND STRUTS 336

Buckling factor of strut—Methods of fixing ends — Euler's formula — Rankine, Straight line, Johnson, Gordon, and Fidler formulæ — Eccentric loading of columns—Flange and web connections to steel columns.

CHAPTER XIII.

SUSPENSION BRIDGES AND ARCHES 357

Stresses in loaded cable—Suspension bridge with uniform load—Stresses in anchor cables—Stiffened suspension bridges with and without central pin—Rolling loads on suspension bridges—Stresses in arches; Eddy's Theorem—Cases where thrust can be found simply; three-pinned arches—Rigid arches.

CHAPTER XIV.

MASONRY STRUCTURES 389

General conditions of stability—Middle-third law—Distribution of stresses on base — Stability of dams; modern theories — Retaining walls and earth pressure; Rankine, Wedge, and Scheffler theories — Stability of walls, chimneys, and buttresses—Masonry arches.

Digitized by Google

CHAPTER XV.

PAGE
REINFORCED CONCRETE AND SIMILAR STRUCTURES . . 435

Properties of concrete—Adhesion between steel and concrete and ratio of elastic constants—Reinforced bars in pure compression or tension—Reinforced concrete beams; various formulæ; T beams—Shear stresses in beams—Columns and spiral reinforcement—Leading systems of reinforced concrete construction.

CHAPTER XVI.

DESIGN OF STEELWORK FOR BUILDINGS, &c. 470

Choice of sizes and shapes of sections—Finish of steelwork—Loads on buildings—Columns, caps and bases—Foundations for columns; safe pressures; brick piers; grillages; pile and caisson foundations; cantilever foundations—Transverse bracing of columns—Girders for buildings—Fireproof construction.

CHAPTER XVII.

DESIGN OF ROOFS 499

Weights of roof-coverings and trusses—Types of roof trusses—Working drawings for steel trusses of various types—Fixing of ends—Gusset rivet connections and eye bars. Timber trusses; collar-beam and hammer-beam trusses.

CHAPTER XVIII.

DESIGN OF BRIDGES AND GIRDERS 515

Dead and live loads on bridges—Types of bridges; deck bridges and through bridges—Economical span—Arrangements of main girders and flooring; working drawings of various types—Design of box and plate girders; area and curtailment of flanges; flange splices; pitch of rivets; design and buckling of webs and arrangements of stiffeners—Design of framed girders; examples from practice and working drawings of deck and through-truss bridges—Design of a three-pinned arch; example from practice.

EXERCISES 561

APPENDIX.—TABLES OF PROPERTIES OF BRITISH STANDARD SECTIONS 577–582

Digitized by Google

THE THEORY & DESIGN OF STRUCTURES.

NOTE—Portions marked with an asterisk may be omitted on the first reading.

CHAPTER I.

STRAIN, STRESS, AND ELASTICITY.

Strain may be defined as the change in shape or form of a body caused by the application of external forces.

Stress may be defined as the force between the molecules of a body brought into play by the strain.

An elastic body is one in which for a given strain there is always induced a definite stress, the stress and strain being independent of the duration of the external force causing them, and disappearing when such force is removed. A body in which the strain does not disappear when the force is removed is said to have a *permanent set*, and such body is called a *plastic body*.

When an elastic body is in equilibrium, the resultant of all the stresses over any given section of the body must neutralise all the external forces acting over that section. When the external forces are applied, the body becomes in a state of strain, and such strain increases until the stresses induced by it are sufficient to neutralise the external forces.

For a substance to be useful as a material of construction, it must be elastic within the limits of the strain to which it will be subjected. Most solid materials are elastic to some extent, and after a certain strain is exceeded they become plastic.

Hooke's Law—enunciated by Hooke in 1676—states that in an elastic body the *strain is proportional to the stress*. Thus, according to this law, if it take a certain weight to stretch a rod

Digitized by Google

a given amount, it will take twice that weight to stretch the rod twice that amount; if a certain weight is required to make a beam deflect to a given extent, it will take twice that weight to deflect the beam to twice that extent.

Kinds of Strain and Stress.—Strains may be divided into three kinds, viz., (1) an *extension*; (2) a *compression*; (3) a *slide*. Corresponding to these strains we have (1) *tensile* stress; (2) *compressive* stress; (3) *shear* stress.

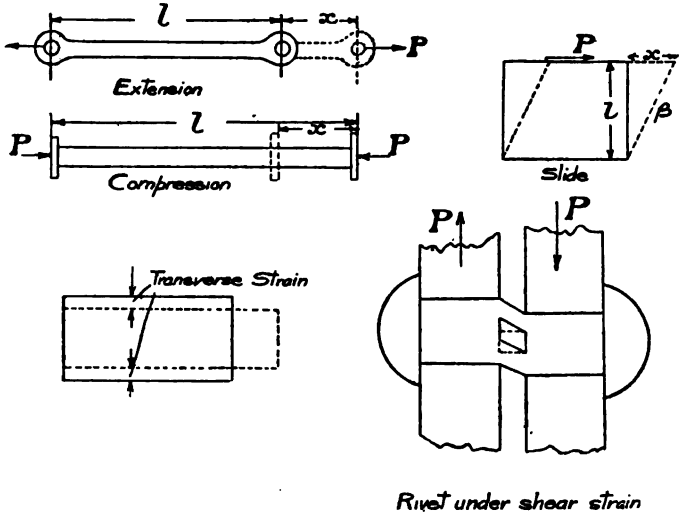

Fig. 1.—*Kinds of Strain.*

A body that is subjected to only one of these, is said to be in a state of *simple* strain, while if it is subjected to more than one, it is said to be in a state of *complex* strain.

Examples of simple strains are to be found in the cases of a tie bar; a column with a central load; a rivet. The best example of a body under complex strain is that of a beam in which, as we shall show later, there exist all the kinds of strain.

INTENSITY OF STRESS.—Imagine a small area a situated at a point X in the cross section of a body under strain, then if S is

Digitized by Google

the resultant of all the molecular forces across the small area, $\frac{S}{a}$ is called the *intensity of stress* at the point X. In the case of bodies under complex strain, the intensity of stress will be different at different points of the cross section, while in a body subjected to a simple strain, the stress will be the same over each point of the cross section, so that in this case if A is the area of the whole cross section and P is the whole force acting over the cross section, the intensity of stress will be equal to $\frac{P}{A}$. In future, unless it is stated to the contrary, we shall use the word 'stress' to mean the 'intensity of stress.'

UNITAL STRAIN.—The unital strain is the strain per unit length of the material. In the case of extension and compression, the total strain is proportional to the original length of the body. Thus, a rod 2 ft. long will stretch twice as much as a rod 1 ft. long for the same load. In Fig. 1, if l is the unstrained length of the rods under tension and compression and x the extension or compression, the unital strain is $\frac{x}{l}$.

In the case of slide strain, the angle but not the length of the body is altered, and this angle β is a measure of the unital strain. If the angle is small, as it always will be in practice with materials of construction, then it will be nearly equal to $\frac{x}{l}$, where x and l are the quantities shown on the figure.

Poisson's Ratio—Transverse Strain.—When a body is extended or compressed, there is a transverse strain tending to prevent change of volume of the body. The amount of transverse strain bears a certain ratio to the longitudinal strain.

$$\text{This ratio} = \frac{\text{transverse strain}}{\text{longitudinal strain}} = \eta$$ varies from $\frac{1}{3}$ to $\frac{1}{4}$ for most materials, and its reciprocal $\frac{1}{\eta}$ is called *Poisson's ratio.*

According to one school of elasticians, the value of this ratio η should be $\frac{1}{4}$, but experimental evidence does not quite support this view, although it is very nearly true for some materials. The ratio is very difficult to measure directly, its value being best

Digitized by Google

obtained by working backwards from the elastic moduli in shear and tension in the manner which will be explained later.

Stress-strain Diagrams. — If a material be tested in tension or compression, and the strain at each stress be measured, and such strains be plotted on a diagram against the stresses, a diagram called the *stress-strain diagram* is obtained. If a material obeys Hooke's Law, such diagram will be a straight line. For most metals, the stress-strain diagram will be a straight line until a certain point is reached, called the *elastic limit*, after which the strain increases more quickly than the stress, until a point called the *yield point* is reached, when there is a sudden comparatively large increase in strain. After the yield point is reached, the metal becomes in a plastic state, and the strains go on increasing rapidly until fracture occurs.

Fig. 2 shows the stress-strain diagram for a tension specimen of mild steel, such as is suitable for structural work.

The portion A B of the diagram is a straight line, and represents the period over which the material obeys Hooke's Law. At the point C, the yield point is reached, and the strain then increases to such an extent that the first portion of the diagram is re-drawn to a considerably smaller scale, such portion being shown as A B_1 C_1. The strain then increases in the form shown until the point D is reached, the curve between C_1 and D being approximately a parabola. When the point D is reached, the maximum stress has been reached, and the specimen begins to pull out and thin down at one section, and if the stress is sustained, fracture will then occur. The portion D E, shown dotted, represents increase of strain with apparent diminution of stress. This diminution is only apparent because the area of the specimen beyond the point rapidly gets smaller, so that the *load* may be decreased, and still keep the *stress* the same. In practice, it is very difficult to diminish the load so as to keep pace with the decrease in area, so that this last portion of the curve is very seldom accurate, and has, moreover, little practical importance.

The specimen draws down at the point of fracture in the manner shown in the diagram. Before the test, it is customary to make centre-punch marks at equal distances apart along the length of the specimen. The distance apart of these points after

Digitized by Google

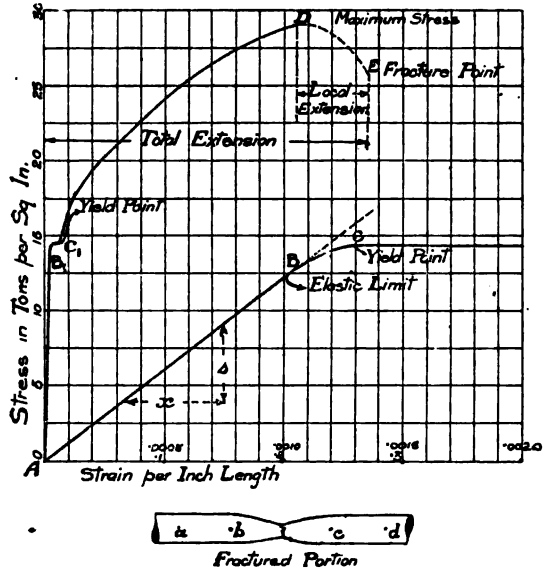

MILD STEEL

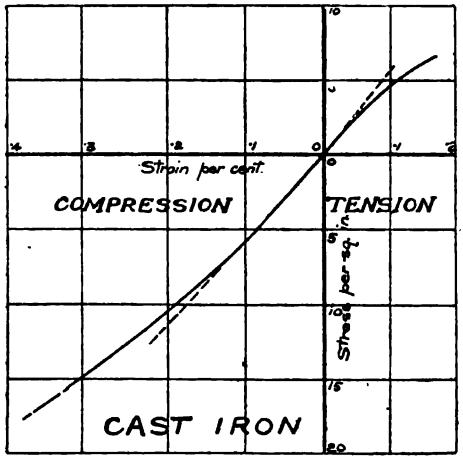

Fig. 2.—Stress-strain Diagrams.

Digitized by Google

fracture of the specimen indicates the distribution of the elongation at different points along the length. Four such marks, *a*, *b*, *c*, *d*, are shown on the figure. The greatest extension occurs at the point of fracture, so that on a specimen of short length, the percentage total extension will be greater than on a longer specimen. For full information on the effect of length of the specimen upon the extension, the reader is referred to a paper by Professor Unwin, in Vol. CLV. *Proc. Inst. C. E.*

For structural work it is usually specified that the steel shall have an ultimate or maximum tensile strength of 28 to 32 tons per square inch, and a 20% elongation on a length of 8 ins. The reason for specifying a definite elongation is to ensure that the steel shall have sufficient ductility. A ductile steel is, as a rule, not brittle, although in exceptional cases a steel which has answered the ordinary tests as to ductility has been known to fracture as if it were quite brittle. For this reason, impact testing has of recent years been used by some authorities, and such method appears to give very good results.

The stress-strain diagrams in compression and shear for mild steel are very similar to that for tension. In compression it is difficult to get the whole diagram, because failure occurs by *buckling*, except on very short lengths, where it is very difficult to measure the strains, and in shear the test has to be made by torsion, because it is almost impossible to eliminate the bending effect. Now, in torsion, the shear stress is not uniform, so that the metal at the exterior of the round bar reaches its yield point before the material in the centre, and this has the effect of raising the apparent yield point. We shall see later that the same occurs in testing for compression or tension by means of beams.

The importance of the elastic limit has been overlooked to a great extent by designers of engineering structures; but inasmuch as the theory, on which most of the formulæ for obtaining the strength of beams are based, assumes that the stress is proportional to the strain, it must be remembered that our calculations are true only so long as Hooke's Law is true, so that the elastic limit of the material is a very important quantity. We shall deal further with this question in discussing working stresses (Chap. II.).

Digitized by Google

CONFUSION BETWEEN ELASTIC LIMIT AND YIELD POINT.—In commercial testing, it is quite common to use no accurate means for measuring the strains (instruments for such measurements are called *extensometers*, but the description of such instruments and of the testing-machines is beyond the scope of the present book*). The load on the steelyard of the machine is run out until the steelyard suddenly drops down on to its stops. This 'steelyard-drop' happens when the yield point is reached, but many people call this the elastic limit. As will be seen from the diagram, Fig. 2, there is no appreciable error made by this confusion in tension testing, but in cross bending the difference is much more marked, and gives rise to confused ideas. We shall deal further with this point as regards beams in Chap. VI., p. 175.

Stress-strain Diagrams for Cast Iron. - Cast iron as a material of construction has gone practically out of use except for compression members or struts. The strength of cast iron varies largely with the composition, and the strength in tension is considerably less than that in compression. Fig. 2 shows the stress-strain diagrams for both tension and compression. It will be seen that in tension the strain is never really proportional to the stress, while in compression the stress and strain are approximately proportional up to a stress of about 8 tons per square inch. In the figure the compression curve is not completed, owing to buckling setting in. It is on account of the fact that the strain is not proportional to the stress that there is a considerable difference between the actual and calculated strengths of cast-iron beams.

Other Materials.—TIMBER.—There are several difficulties attendant upon the accurate testing of timber, owing to the effect of dampness and the homogeneity of the material. It may be taken that the stress-strain diagrams are approximately straight for a portion, but then curve off in a similar manner to the compression curve for cast iron.

CEMENT AND CONCRETE. — The stress-strain diagram for cement and concrete in compression is never exactly straight, so

* For further information the reader may consult Unwin's *Testing of Materials of Construction;* Popplewell's *Materials of Construction;* Lineham's *Mechanical Engineering.*

Digitized by Google

that there is no elastic limit, the exact curve depending on the composition and on the time after setting.

The curve shown in Fig. 3 is almost exactly a parabola. This curve is for a 1–3–6 concrete, 90 days old, which was tested by Mr. R. H. Slocum, of the University of Illinois. Some authorities assume that the curve is a parabola, but in practice it is seldom that the curve comes so near to a parabola as the above. The stress-strain curve is, however, nearly always of a similar shape,

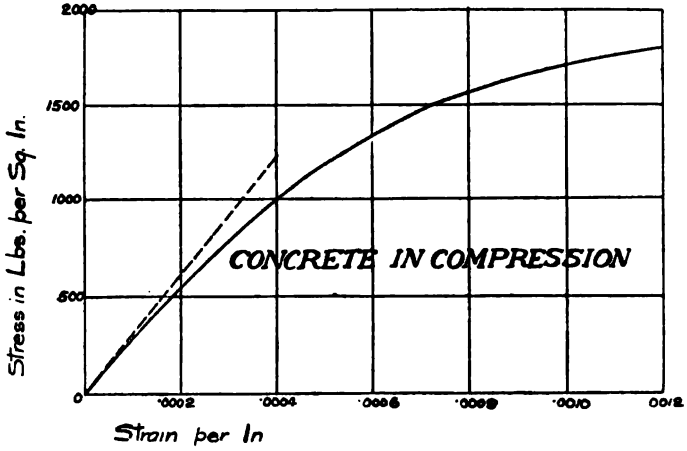

Fig. 3.—Stress-strain Diagram for Concrete in Compression.

the strains increasing more quickly than the stresses. It is extremely important to remember that with cement and concrete the relations between stress and strain vary largely with the quality and proportions of ingredients, and cannot be taken as almost constant as in the case of steel. In tension a somewhat similar curve is obtained, but as cement and concrete are practically never used in tension, much less work has been done on its tensile strength, which appears to be very variable.

Brickwork, Stone, &c. — The stress-strain diagrams for brickwork and stone are curved, but not so much as shown for concrete. There is no definite elastic limit, and the curve

Digitized by Google

depends largely on whether the materials are set in mortar, as in this case the properties of the latter will effect the shape of the curve. For further information on this subject the reader is referred to Johnson's *Materials of Construction* (Wiley & Sons, New York), and to a paper by W. C. Popplewell, in Vol. CLXI., *Proc. Inst. C.E.*

The Elastic Constants or Moduli.—If a material is truly elastic, *i.e.*, if the strain is proportional to the stress, then it follows that the intensity of stress is always a certain number of times the unital strain, or that the ratio $\frac{\text{intensity of stress}}{\text{unital strain}}$ is constant. Now this stress-strain ratio is called a *modulus*. That for tension and compression is generally known as *Young's modulus*, and is given the letter E; that for shear is called the *shear*, or *rigidity modulus* (G). There is an additional modulus called the *bulk* or *volume modulus* (K), which represents the ratio between the unital change in volume and the intensity of pressure or tension on a cube of material subjected to pressure or tension on all faces.

Young's modulus is the one which we shall be most concerned with in the design of structures. Suppose a tension member (a *tie* as it is called) or a compression member (a *strut*), of length l and cross-sectional area A is subjected to a pull or thrust P, and that the extension or compression is x, Fig. 1. Then the intensity of stress is $\frac{P}{A}$, and the unital strain is $\frac{x}{l}$

$$\therefore \text{ Young's modulus } = E = \frac{P}{A} \div \frac{x}{l} = \frac{P\,l}{A\,x}$$

NUMERICAL EXAMPLE.—*A mild-steel tie bar*, 12 *ins. long and of* 1½ *ins. diameter, is subjected to a pull of* 18 *tons. If the extension is* ·0094 *in., find Young's modulus.*

Area of section of 1½ ins. diam. = 1·767 sq. ins.

$$\therefore \text{ Stress per sq. in. } = \frac{18}{1{\cdot}767} = 10{\cdot}19 \text{ tons per sq. in.}$$

$$\text{Unital strain } = \frac{{\cdot}0094}{12} = {\cdot}000783$$

$$\therefore \text{ Young's modulus } = \frac{10{\cdot}19}{{\cdot}000783} = 13{,}000 \text{ tons per sq. in.}$$

Digitized by Google

The value of Young's modulus can be found from the stress-strain diagram. Thus, in that for mild steel, Fig. 2,

$$E = \frac{s}{x}$$

Now in the relation $E = \frac{\text{stress}}{\text{strain}}$, if the strain is equal to 1, *i.e.*, if the bar is pulled to twice its original length we have that E = stress, and this accounts for the definition of Young's modulus that some writers have given, viz.: Young's modulus is the stress that is necessary to pull a bar to twice its original length. Some students find this definition more clear than the one previously given, but it must be remembered that no material of construction will pull out to twice its original length without fracture.

YOUNG'S MODULUS FOR CONCRETE AND SIMILAR SUBSTANCES.—If Young's modulus is a constant, it can be found for strains and stresses below the elastic limit only, and, strictly speaking, there is no modulus for substances such as concrete, where the strain is not proportional to the stress. As we shall see later in Chap. XV., the value of Young's modulus is a very important quantity in the design of reinforced concrete. From Fig. 3 it is clear that since the strain increases more quickly than the stress in concrete, the value of the ratio $\frac{\text{stress}}{\text{strain}}$ will be greater for small stresses than for large stresses, and so, before the value of this ratio is of any real use to us, we must know the value of the stress at which the ratio is calculated. One can hardly lay too great stress on the importance of having exact ideas on the principles which form the foundations on which the theory of structures is built, and with concrete it is practically useless to speak of the compressive strength and Young's modulus unless the composition of the concrete and the stress at which the modulus is calculated are known.

Relation between Elastic Constants.—For an elastic material there will be certain relations between the elastic moduli E, G, K, and Poisson's ratio $\frac{1}{\eta}$. These relations can be found as follows:

Digitized by Google

To first find a relation between E and K consider a cube of unit side subjected to a pull f, Fig. 4 (a).

Let the elongation along the axis be a, and let the transverse contraction be b.

$$\begin{aligned}\text{Then original volume of cube} &= 1\\ \text{strained volume of cube} &= (1 + a)(1 - b)^2\\ &= 1 - 2b + b^2 + a - 2ab + ab^2\\ &= 1 + a - 2b \text{ (nearly)}\end{aligned}$$

because as the strains are very small their product may be neglected.

$$\begin{aligned}\therefore \text{Increase in volume} &= (1 + a - 2b) - 1\\ &= (a - 2b)\end{aligned}$$

Now apply a pull to each side of the cube. There will now be three pulls, each producing an increase of volume equal nearly to $(a - 2b)$.

$$\begin{aligned}\therefore \text{Total increase in volume is nearly equal to } & 3(a - 2b)\\ &= 3a\left(1 - \frac{2b}{a}\right)\end{aligned}$$

$$\text{Now } \frac{b}{a} = \frac{\text{transverse strain}}{\text{longitudinal strain}} = \eta$$

$$\therefore \text{Increase in volume} = 3a(1 - 2\eta)$$

$$\therefore \text{Since original volume} = 1$$

$$\frac{\text{increase in volume}}{\text{original volume}} = \text{volume unital strain} = 3a(1 - 2\eta)$$

$$\text{Now K} = \frac{\text{intensity of pull}}{\text{unital strain}} = \frac{f}{3a(1 - 2\eta)}$$

$$\text{and } \frac{f}{a} = \frac{\text{tensile intensity of stress}}{\text{unital tensile strain}} = \text{Young's modulus}$$
$$= \text{E}$$

$$\therefore \text{K} = \frac{\text{E}}{3(1 - 2\eta)} \quad \ldots\ldots\ldots\ldots\ldots\ldots\ldots\ldots (1)$$

Now find the relation between E *and* G *as follows*:—

Suppose that two shearing forces of intensity are applied to the faces of a unit cube A B C D, Fig. 4 (b). Now consider the equili-

Digitized by Google

brium of the portion A D C, Fig. 4 (*c*). To balance the forces f there must be a force pulling f_t along the diagonal A C, and the value of f_t must be $\sqrt{2} \times f$. Now the area over which this force acts will be $\sqrt{2}$ since the cube is of unit side, so that there will be a tensile stress of $\frac{\sqrt{2} f}{\sqrt{2}} = f$. Similarly considering the portion B C D, Fig. 4 (*d*) there must be a compressing force f_c along the diagonal B D, and the compressive stress will be $= \frac{\sqrt{2} f}{\sqrt{2}} = f$. Therefore we see that: *Two shear stresses on planes at right angles to each other are equivalent to tensile and compressive stresses of intensity equal to that of the shear stress at right angles to each other, and at an angle of* 45° *to the shear stresses.*

Now the cube will be deformed to the shape $A_1 B_1 C_1 D_1$, Fig. 4 (*e*).

The unital shear strain is measured by the angle of distortion 2ϕ. Since the strains are very small, this is practically equal to $\frac{2 B B_2}{\frac{1}{2} B C} = \frac{2 B B_2}{\frac{1}{2}}$ (since B C = 1) $= 4 B B_2$.

Let the unital strain due to the tension along the diagonal B D be a. Then there will also be a strain along this diagonal due to the transverse strain from the compression stress in A C. This will be equal to $\eta \times a$. ∴ Total unital tensile strain along diagonal $= a(1 + \eta)$. Then $B B_1$ = unital strain along diagonal $\times \frac{1}{2} B D$, since $B B_1$ is equal to $D D_1$

$$\therefore B B_1 = a(1 + \eta) \times O B = \frac{\sqrt{2}\, a}{2} (1 + \eta).$$

Because the strains are in reality very small, $B B_2 B_1$ is very nearly a right-angled triangle.

$$\therefore B B_1 = \sqrt{2} \times B B_2$$

$$\text{or } B B_2 = \frac{B B_1}{\sqrt{2}} = \frac{a(1 + \eta)}{2}$$

$$\text{But } \frac{\text{intensity of tensile stress}}{\text{unital tensile strain}} = \frac{f}{a} = E$$

$$\text{and } \frac{\text{intensity of shear stress}}{\text{unital shear strain}} = \frac{f}{4 B B_2} = G$$

Digitized by Google

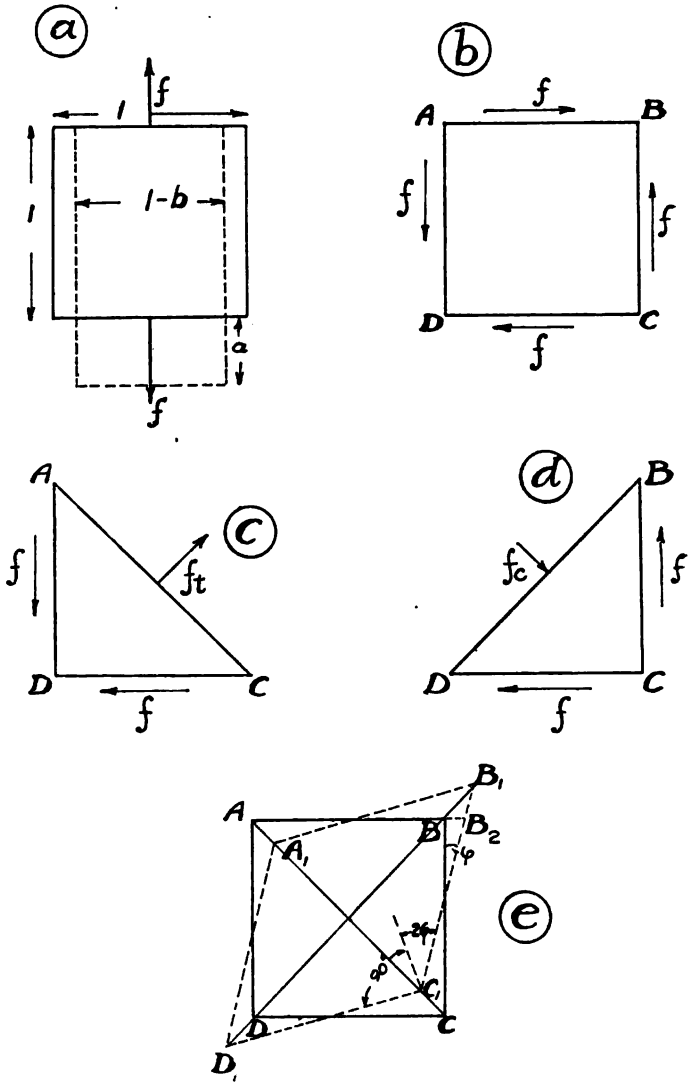

Fig. 4.

Digitized by Google

Since we have proved that the tensile stress along the diagonal is equal in intensity to the shear stress.

$$\text{Therefore } f = aE = G \times 4BB_2$$

$$\therefore \frac{E}{G} = \frac{4BB_2}{a} = \frac{Aa(1+\eta)}{2a}$$

$$\therefore \frac{E}{G} = 2(1+\eta) \quad \ldots\ldots\ldots\ldots\ldots (2)$$

Now we have already shown in (1) that:

$$\frac{E}{K} = 3(1-2\eta) \quad \ldots\ldots\ldots\ldots\ldots (3)$$

$$\text{From (2) } \eta = \frac{E}{2G} - 1$$

$$\text{From (3) } \eta = \frac{1}{2} - \frac{E}{6K}$$

$$\therefore \frac{E}{2G} - 1 = \frac{1}{2} - \frac{E}{6K}$$

$$\therefore \frac{E}{2}\left(\frac{1}{G} + \frac{1}{3K}\right) = \frac{3}{2}$$

$$\therefore \frac{1}{G} + \frac{1}{3K} = \frac{3}{E}$$

$$\text{or } \frac{9}{E} = \frac{3}{G} + \frac{1}{K} \quad \ldots\ldots\ldots\ldots\ldots (4)$$

This expresses the relation between the constants in its simplest form.

It will be noted that if $\eta = \frac{1}{4}$, as some authorities state, then $\frac{E}{G} = 2{\cdot}5$; this may be taken as true if the value of G for the material is not known.

* **Complex Stress.**—PRINCIPAL STRESSES.—It has been shown that when a body is under a complex system of stresses, such stresses will be the same as those due to the combination of three simple tensile or compressive stresses in planes at right angles to each other. Such simple stresses are called the *principal stresses.*

Digitized by Google

Consider the case of a block of material subjected to pulls P and Q, Fig 5, in two directions at right angles, and let the pull per square inch of the sectional area in each direction be p and q respectively.

Consider the stresses on a plane A B inclined at an angle θ to the force P.

The stress p can be resolved perpendicularly and along A B, *i.e.*, normally and tangentially to A B.

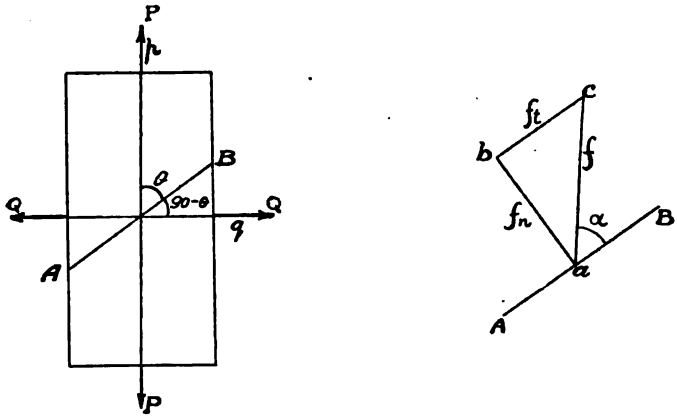

Fig. 5.—Principal Stresses.

Now consider 1 sq. in. of area perpendicular to p. The corresponding area along A B will be $\frac{1}{\sin \theta}$

Now the component of p perpendicular to A B will be $p \sin \theta$, and the component along A B will be $p \cos \theta$, but stress = component of force ÷ area.

$\therefore$ Normal component of stress p along A B $= p \sin \theta \div \frac{1}{\sin \theta}$

$= p \sin^2 \theta$

tangential component of stress p along A B $= p \cos \theta \div \frac{1}{\sin \theta}$

$= p \sin \theta \cos \theta$

Now considering stress q, its normal component to A B will be

Digitized by Google

opposite in direction to that of p, and since in this case the area is $\frac{1}{\sin(90-\theta)} = \frac{1}{\cos\theta}$ and the normal and components of q are respectively $q\cos\theta$ and $p\sin\theta$, the normal component of stress will be $q\cos^2\theta$, and the tangential component of stress will be $-q\sin\theta\cos\theta$, since in this case the tangential components are in the same direction.

$\therefore$ Total normal component $= f_n = p\sin^2\theta + q\cos^2\theta$...(1)

Total tangential component $= f_t = (p-q)\sin\theta\cos\theta$ ...(2)

Now the resultant of the stresses f_n and f_t which we will call f, will be given by $a\,c$.

i.e., $f = \sqrt{f_n^2 + f_t^2}$

$= \sqrt{(p\sin^2\theta + q\cos^2\theta)^2 + (p-q)^2\sin^2\theta\cos^2\theta}$

$= \sqrt{p^2(\sin^2\theta + \sin^2\theta\cos^2\theta) + q^2(\cos^2\sin^2\theta + \cos^2\theta) + 2pq(\cos^2\theta\sin^2\theta - \cos^2\theta\sin^2\theta)}$

$= \sqrt{p^2\sin^2\theta(\cos^2\theta + \sin^2\theta) + q^2\cos^2\theta(\sin^2\theta + \cos^2\theta) + 0}$

$= \sqrt{p^2\sin^2\theta + q^2\cos^2\theta}$ .....(3)

because $\cos^2\theta + \sin^2\theta = 1$.

The inclination α of this stress is given by—

$$\tan\alpha = \frac{f_n}{f_t} = \frac{p\sin^2\theta + q\cos^2\theta}{(p-q)\sin\theta\cos\theta}$$

$$= \frac{p\tan^2\theta + q}{(p-q)\tan\theta} \quad \text{.....(4)}$$

If ϕ is the angle between $a\,c$ and the direction of p,

Then $\phi = (\alpha - \theta)$

$$\tan\phi = \tan(\alpha-\theta) = \frac{\tan\alpha - \tan\theta}{1 + \tan\alpha\,.\,\tan\theta}$$

$$= \frac{\dfrac{p\tan^2\theta + q}{(p-q)\tan\theta} - \tan\theta}{1 + \dfrac{p\tan^2\theta + q}{(p-q)\tan\theta}\,.\,\tan\theta}$$

Digitized by Google

$$= \frac{p \tan^2\theta + q - (p-q)\tan^2\theta}{(p-q)\tan\theta + \tan\theta\,(p\tan^2\theta + q)}$$

$$= \frac{q\,(1 + \tan^2\theta)}{p\tan\theta\,(1 + \tan^2\theta} = \frac{q}{p\tan\theta}$$

$$= \frac{q}{p}\cot\theta \quad \ldots\ldots\ldots\ldots\ldots\ldots\ldots\ldots (5)$$

The Ellipse of Stress.—Draw circles of radius O X and O Y, Fig. 6, equal to q and p respectively, and let O R be drawn at angle θ to O Y.

Draw a radius O F to the larger circle at right angles to O R and cutting the smaller circle in E.

Draw F H at right angles to O Y, and E G at right angles to F H, and join O G.

$$\text{Now } OH = OF\cos(90-\theta) = p\sin\theta$$

$$\text{and } GH = EK = OE\sin(90-\theta) = q\cos\theta$$

$$\therefore OG = \sqrt{OH^2 + HG^2} = \sqrt{p\sin^2\theta + q\cos^2\theta}$$

$$\therefore \text{by equation (3) } OG = f$$

$$\text{Now } \tan HOG = \frac{HG}{OH} = \frac{q\cos\theta}{p\sin\theta} = \frac{q}{p}\cot\theta = \tan\phi$$

$$\therefore \angle HOG = \phi \text{ and, since } \alpha = \theta + \phi, \angle GOR = \alpha$$

Now the locus of the point G is an ellipse of major axis $2p$ and minor axis $2q$, and such ellipse is called the *Ellipse of Stress.*

We see, therefore, that by drawing a line O F from the centre O, at right angles to a given direction to the outer circle, and drawing F H horizontal to meet the ellipse of stress in G, then O G gives the resultant stress on a plane in the given direction, and the angle G O R = α gives the angle between such resultant stress and the plane.

NUMERICAL EXAMPLE.—*Suppose a square bar of 2 ins. side and 4 ins. long is subjected to pulls of 10 and 12 tons respectively in axial and transverse directions. Find the resultant stress on a plane*

Digitized by Google

inclined at 60 *degrees to the axis, and find the inclination of the stress to that plane.*

In this case $p = \frac{10}{4} = 2{\cdot}5$ tons per square inch,

and $q = \frac{12}{8} = 1{\cdot}5$ tons per square inch.

Then Fig. 6 shows the ellipse of stress drawn to scale.

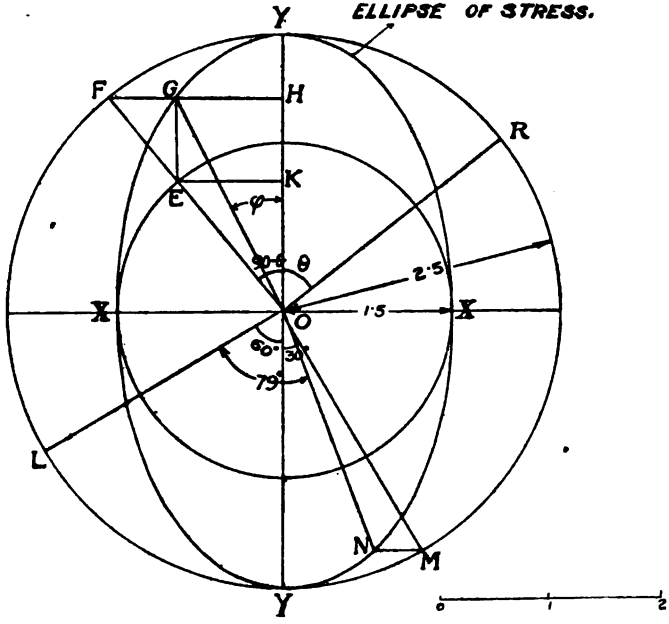

Fig. 6.—*Ellipse of Stress.*

Draw O L at 60° to O Y and draw O M at right angles to O L to cut the outer circle in M; drawing M N horizontal to meet the ellipse of stress in N, then O N gives the resultant stress and $\angle$ L O N gives its inclination to the plane. O N will be found to be 2·29 tons per square inch, and $\angle$ L O N to be 79°.

Now considering again the stresses p and q and the normal and tangential stresses f_n and f_t at an inclination θ to p we see that p and q are the *principal stresses* corresponding to the stresses

Digitized by Google

f_n and f_t. Now in practice we often require to find the magnitude and inclination of the principal stresses, because one of these stresses will be that of maximum intensity of stress. This is clear from the figure of the ellipse of stress, since O Y is obviously the maximum radius vector of the ellipse. We will now therefore find the principal stresses due to a normal stress f_n and a shear or tangential stress f_t at right angles to each other.

* **Combined Normal and Shear Stress.**—To investigate this problem we must first prove that a shear stress must

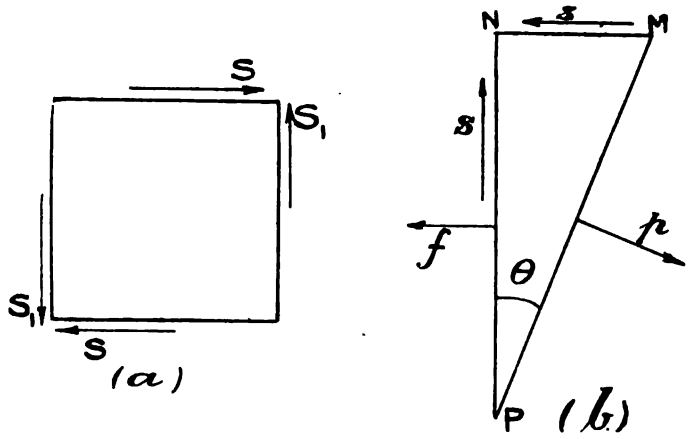

Fig. 7.—Combined Normal and Shear Stress.

always be accompanied by an equal shear stress at right angles to it. Take for example a unit cube, Fig. 7 (*a*), subjected to shearing forces S along opposite sides. These forces S form a couple, and the cube can be kept in equilibrium only by another couple of equal moment and opposite sense, which couple is given by shearing forces S_1 at right angles to S.

Now consider the case of a complex system of stress consisting of a normal stress f and a shear or tangential stress s. (We will not continue to use f_t for the latter, because in the case of beams, for which we shall require to use this problem, f_t is usually used to denote the tensile stress.)

Digitized by Google

Let P N, Fig. 7 (*b*), represent a portion of the plane on which the stresses f and s act.

Let one of the planes of principal stress be represented by P M, and let this principal stress be p. Then along M N there acts a shear stress also of intensity s.

Then the resolved portions of the forces due to p and to the stresses f and s must be equal in the directions P N and M N.

Therefore we have

$$f \cdot \text{PN} + s \cdot \text{MN} = p \cdot \text{PM} \cos\theta \quad \ldots\ldots(1)$$

$$\text{also } s \cdot \text{PN} = p \cdot \text{PM} \sin\theta \quad \ldots\ldots(2)$$

$$\therefore \text{From (1)} \quad f\frac{\text{PN}}{\text{PM}} + s\frac{\text{MN}}{\text{PM}} = p\cos\theta$$

$$i.e., \quad f\cos\theta + s\sin\theta = p\cos\theta$$

$$\therefore (p-f)\cos\theta = s\sin\theta \quad \ldots\ldots(3)$$

$$\text{From (2)} \quad s\frac{\text{PN}}{\text{PM}} = p\sin\theta$$

$$\therefore s\cos\theta = p\sin\theta \quad \ldots\ldots(4)$$

$\therefore$ Dividing (3) and (4) we have

$$\frac{p-f}{s} = \frac{s}{p}$$

$$p(p-f) = s^2$$

$$p^2 - pf - s^2 = 0$$

$$p = \frac{f}{2} \pm \frac{1}{2}\sqrt{f^2 + 4s^2}$$

$$\text{or } p = \frac{f}{2}\left(1 \pm \sqrt{1 + \frac{4s^2}{f^2}}\right) \quad \ldots\ldots(5)$$

The minus sign corresponds to the second principal stress, which will be in compression; as we are concerned only with the maximum stress, we will take the positive value, viz.:

$$p = \frac{f}{2}\left(1 + \sqrt{1 + \frac{4s^2}{f^2}}\right) \quad \ldots\ldots(6)$$

The direction of the plane at which this stress occurs is given by θ. This is found as follows:

$$\text{From (3)} \quad p\cos\theta - f\cos\theta = s\sin\theta$$

$$\text{From (4)} \quad p\sin\theta = s\cos\theta$$

$$\therefore p = \frac{s\cos\theta}{\sin\theta}$$

Digitized by Google

$$\therefore \quad \frac{s \cos^2 \theta}{\sin \theta} - f \cos \theta = s \sin \theta \quad \ldots\ldots\ldots\ldots\ldots\ldots (7)$$

$$\therefore \quad s (\cos^2 \theta - \sin^2 \theta) = f \sin \theta \cos \theta$$

$$\therefore \quad s \cos 2\theta = f \frac{\sin 2\theta}{2}$$

$$\text{or} \quad \tan 2\theta = \frac{2s}{f} \quad \ldots\ldots\ldots\ldots\ldots\ldots (8)$$

This will give two values of θ, 90° apart, and so gives the inclination of both planes of principal stress.

MAXIMUM SHEAR STRESS.—Returning to the consideration of the principal stresses p and q, we saw that the tangential component on a plane at angle θ to p was given by $(p - q) \sin \theta \cos \theta$. (See p. 16, equation (2)). Now this will be a maximum when $\sin \theta \cos \theta$ is a maximum, *i.e.*, when $\frac{\sin 2\theta}{2}$ is a maximum, or when $\theta = 45°$. Therefore we see that the maximum shear stress occurs at 45° to the principal stresses, and is equal to $\frac{(p-q)}{2}$

In the problem that we are considering, we have proved that

$$p = \frac{f}{2}\left(1 + \sqrt{1 + \frac{4s^2}{f^2}}\right) \text{ and that } q = \frac{f}{2}\left(1 - \sqrt{1 + \frac{4s^2}{f^2}}\right)$$

$$\therefore \quad \frac{p - q}{2} = \frac{f}{2}\sqrt{1 + \frac{4s^2}{f^2}}$$

$$\therefore \quad \text{Maximum shear stress} = \frac{f}{2}\sqrt{1 + \frac{4s^2}{f^2}} \quad \ldots\ldots\ldots\ldots (9)$$

$$\text{or} \quad = \sqrt{\frac{f^2}{4} + s^2} \quad \ldots\ldots\ldots\ldots (10)$$

The latter form is more convenient because in the case when $f = 0$, the former gives an indeterminate result.

NUMERICAL EXAMPLE.—*A steel bolt, 1 in. in diameter, is subjected to a direct pull of 3000 lb. and to a shearing force of 1 ton. Find the maximum tensile and shearing stresses in lbs. per square inch, and the inclinations of the directions of the stresses to the longitudinal axis of the bolt.* (*B.Sc. Lond. 1907.*)

$$\text{In this case } f = \frac{3000}{\text{area of 1 in. bolt}} = \frac{3000}{\cdot 7854}$$

$$= 3819 \text{ lb. per sq. in.}$$

$$s = \frac{2240}{\cdot 7854} = 2852 \text{ lb. per sq. in.}$$

Digitized by Google

$$\therefore \text{ Maximum tensile stress } = p = \frac{f}{2}\left(1 + \sqrt{1 + \frac{4s^2}{f^2}}\right)$$

$$= \frac{3819}{2}\left(1 + \sqrt{1 + \frac{4 \times 2852^2}{3819^2}}\right)$$

$$= \frac{3819}{2}\left(1 + \sqrt{1 + 2{\cdot}23}\right)$$

$$= \frac{3819}{2}\left(1 + 1{\cdot}797\right)$$

$$= \underline{5342 \text{ lb. per square inch.}}$$

Inclination of principal plane to plane perpendicular to axis is given by

$$\tan 2\theta = \frac{2s}{f} = \frac{2 \times 2852}{3819}$$

$$= 1{\cdot}494$$

$$\therefore \quad 2\theta = 55^\circ 12' \text{ nearly}$$

$$\therefore \quad \theta = 27^\circ 36'$$

$$\therefore \text{ Inclination to longitudinal axis } = 90 - 27^\circ 36'$$

$$= \underline{62^\circ 24'}$$

$$\text{Maximum shear stress } = \sqrt{\frac{f^2}{4} + s^2}$$

$$= \sqrt{\frac{3819^2}{4} + 2852^2}$$

$$= 2852\sqrt{1 + \frac{3819^2}{4 \times 2852^2}}$$

$$= 2852\sqrt{1 + {\cdot}448}$$

$$= 2852 \times 1{\cdot}201$$

$$= \underline{3428 \text{ lb. per square inch.}}$$

This stress will occur at 45° to the direction of principal stress, *i.e.*, at $62^\circ 24' - 45^\circ = \underline{17^\circ 24'}$ with longitudinal axis,

or else at 90° to this, *i.e.* at $\underline{72^\circ 36'}$ with longitudinal axis.

*** Maximum Strain compared with Maximum Stress.** —In questions involving complex stresses it is necessary to remember that the maximum strain does not occur on the same plane as the maximum stress. There is some considerable divergence among elasticians (a term suggested by Professor Karl Pearson, F.R.S.) as to whether the ultimate criterion of safety in a structure

Digitized by Google

depends on the tensile or compressive stress exceeding a certain value, or the shear stress exceeding a certain value, or on the strain exceeding a certain value.

We have considered the cases of maximum tensile or compressive and shear stresses. We will now consider the question of maximum strain.

Suppose a rectangular block A B C D receive two tensile strains at right angles and a slide strain in the same plane.

Under the combined strain the block assumes the position

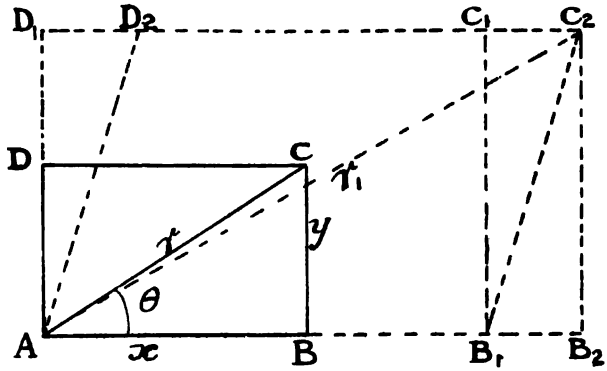

Fig. 8.—*Combined Strains.*

A D_2 C_2 B_1. Then, if A B = x, B C = y, and A C = r, and x_1 y_1 r_1 are the strained lengths.

Unital strain in direction $x = s_x = \dfrac{x_1 - x}{x}$

" " " $y = s_y = \dfrac{y_1 - y}{y}$

" " " $r = s_r = \dfrac{r_1 - r}{r}$

$\therefore$ We have $x_1 = x\,(1 + s_x)$ .....(1)

$y_1 = y\,(1 + s_y)$ .....(2)

$r_1 = r\,(1 + s_r)$ .....(3)

$\therefore\ r_1^2 = r^2\,(1 + 2\,s_r + s_r^2)$

$= r^2\,(1 + 2\,s_r)$ .....(4)

Since squares of strains may be neglected.

Digitized by Google

$$\text{Now } r_1^2 = AC_2^2 = AB_2^2 + C_2B_2^2$$
$$= (AB_1 + B_1B_2)^2 + AD_1^2$$
$$= (AB_1 + D_1D_2)^2 + AB_1^2$$
$$\text{Now } AB_1 = x_1 = x(1 + s_x)$$
$$AD_1 = y_1 = y(1 + s_y)$$
$$D_1D_2 = y_1\beta = \beta y(1 + s_y) = \beta y$$

since β is small and therefore $\beta \times s_y$ is of second order and therefore negligible.

$$\therefore r_1^2 = \{x(1 + s_x) + \beta y\}^2 + \{y(1 + s_y)\}^2$$
$$= x^2(1 + 2s_x) + 2xy\beta + y^2(1 + s_y) \quad \ldots\ldots(5)$$

neglecting all second powers of strains,

$$\text{but } r^2 = x^2 + y^2$$
$$\therefore r_1^2 = r^2 + 2x^2 s_x + 2y^2 s_y + 2xy\beta \quad \ldots\ldots(6)$$

$\therefore$ From (4)

$$r^2(1 + 2s_r) = r^2 + 2x^2 s_x + 2y^2 s_y + 2xy\beta$$
$$\text{or } s_r = \left(\frac{x}{r}\right)^2 s_x + \left(\frac{y}{r}\right)^2 s_y + \frac{xy}{r^2}\beta \quad \ldots\ldots(7)$$

Expressing this in terms of the angle θ we get

$$s_\theta = s_x \cos^2\theta + s_y \sin^2\theta + \beta \sin\theta \cos\theta \quad \ldots\ldots(8)$$

Our next problem is to find the value of θ, for which the resultant unital strain s_θ is a maximum.

This occurs when $\frac{d\,s_\theta}{d\,\theta} = 0$

i.e., when

$$s_x \cdot 2\cos\theta(-\sin\theta) + s_y\, 2\sin\theta\cos\theta + \beta(\cos\theta\cos\theta + \sin\theta[-\cos\theta]) = 0$$

i.e., when $-s_x \sin 2\theta + s_y \sin 2\theta + \beta\cos 2\theta = 0$

$$\sin 2\theta\,(s_x - s_y) = \beta\cos 2\theta$$
$$\text{or } \tan 2\theta = \frac{\beta}{s_x - s_y} \quad \ldots(9)$$

This gives two values of θ at right angles, and so we see that the directions of maximum strain are at right angles.

Now consider equation (8), reuniting and putting $1 = \cos^2\theta + \sin^2\theta$, we get

$$s_\theta(\cos^2\theta + \sin^2\theta) = s_x\cos^2\theta + s_y\sin^2\theta + \beta\sin\theta\cos\theta.$$

Digitized by Google

Dividing by $\cos^2\theta$, we get

$$s_\theta(1 + \tan^2\theta) = s_x + s_y \tan^2\theta + \beta \tan\theta$$

$$\text{or } \tan^2\theta(s_y - s_\theta) + \beta \tan\theta + s_x - s_\theta = 0$$

$$\textit{i.e.}, \tan\theta = \frac{-\beta \pm \sqrt{\beta^2 - 4(s_y - s_\theta)(s_x - s_\theta)}}{2(s_y - s_\theta)}$$

For this to be real,

$$\beta^2 \text{ must not be } < 4(s_y - s_\theta)(s_x - s_\theta)$$

Now as s_θ increases, $4(s_y - s_\theta)(s_x - s_\theta)$ will increase, since the latter expression is equal to $4(s_\theta - s_x)(s_\theta - s_y)$

$\therefore$ The greatest value s_θ can have is such as to make

$$\beta^2 = 4(s_y - s_\theta)(s_x - s_\theta)$$

$$\textit{i.e.}, s_\theta^2 - s_\theta(s_x + s_y) + s_x s_y - \frac{\beta^2}{4} = 0$$

$$\textit{i.e.}, s_\theta = \frac{s_x + s_y \pm \sqrt{(s_x - s_y)^2 + \beta^2}}{2} \quad \ldots\ldots\ldots(10)$$

Now consider the case for which we have already worked out the principal stress, viz., the combined stress due to a tensile or compressive stress f and a shear stress s. (NOTE.—This shear *stress* s must not be confused with the *strains* s_x, &c.) In this case if s_x = strain due to stress f, the only strain in direction y is the transverse strain due to s_x, *i.e.*, $s_y = -\eta s_x$ (negative because the transverse strain is compressive).

Considering only the positive value in equation (10)

$$\therefore \quad s_\theta = \frac{s_x(1 - \eta) + \sqrt{s_x^2(1 + \eta)^2 + \beta^2}}{2}$$

Now $s_x = \frac{f}{E}$ and $\beta = \frac{s}{G}$

Also $s_\theta = \frac{p_1}{E}$, where p_1 is the equivalent stress due to considering the maximum strain, E and G being the Young's and shear moduli.

$$\therefore \frac{p_1}{E} = \frac{f(1 - \eta)}{2E} + \frac{1}{2}\sqrt{\frac{f^2}{E^2}(1 + \eta)^2 + \frac{s^2}{G^2}}$$

$$= \frac{f}{2E}\left\{(1 - \eta) + \sqrt{(1 + \eta)^2 + \frac{s^2 \cdot E^2}{f^2 \cdot G^2}}\right\}$$

Digitized by Google

but $\frac{E}{G} = 2(1 + \eta)$

$$\therefore \quad p_1 = \frac{f}{2}\left\{(1 - \eta) + (1 + \eta)\sqrt{1 + \frac{4s^2}{f^2}}\right\} \quad \ldots (11)$$

Now η is very nearly $\frac{1}{4}$ for steel.

$\therefore$ taking this value, we get

$$p_1 = \frac{f}{2}\left(\frac{3}{4} + \frac{5}{4}\sqrt{1 + \frac{4s^2}{f^2}}\right) \quad \ldots\ldots\ldots\ldots\ldots\ldots\ldots (12)$$

Comparing this with the corresponding equation (6) (page 20), from considering the stress we see clearly the difference between the results from the two points of view

NUMERICAL EXAMPLE.—*Consider the same problem as worked on p.* 21.

In that case $f = 3819$ lb. per square inch.

$s = 2852$ „ „ „

$$\therefore \quad p_1 = \frac{3819}{2}\left(\frac{3}{4} + \frac{5}{4}\sqrt{1 + \frac{4 \times 2852^2}{3819^2}}\right)$$

$$= \frac{3819}{2}\left(\frac{3}{4} + \frac{5}{4}\sqrt{3{\cdot}23}\right)$$

$$= \frac{3819}{2}(.75 + 2{\cdot}246)$$

$$= \frac{3819}{2} \times 2{\cdot}996$$

$$= 5722 \text{ lb. per square inch.}$$

To get the inclination at which the maximum strain occurs return to equation (9) by which

$$\tan^2\theta = \frac{\beta}{s_x - s_y}$$

In this case we get

$$\tan^2\theta = \frac{\frac{s}{G}}{s_x(1 + \eta)} = \frac{\frac{s}{G}}{f(1 + \eta)} = \frac{s \cdot E}{f(1 + \eta) \cdot G}$$

$$= \frac{s \cdot 2(1 + \eta)}{f(1 + \eta)} = \frac{2s}{f}$$

This is the same as in the case considering the principal stress, and so θ has the value as given before.

Digitized by Google

In this method of allowing for complex stresses, which method the author has given at considerable length because it is not referred to at all in most text-books, p_1 is the simple tensile stress which will produce the same strain as the maximum strain in the material, and so may be looked upon as the stress which is equivalent to the given combined stresses.

This method of maximum strain, which we may call the St. Venant, or French method, in contradistinction to the maximum stress or Rankine method, is comparatively little known in England, but the leading authorities on the theory of elasticity strongly advocate its use.

Although the subject is of utmost importance in the theory of structures, comparatively little reliable experimental work has been done on the subject. A valuable paper on the subject, by Professor E. L. Hancock, will be found in the *Philosophical Magazine* for February and October, 1906. This writer apparently favours the shear criterion of combined stress; but, although we do not consider such papers as definitely proving the advantage of the shear over the strain method, they certainly confirm the results previously obtained by other investigators that the Rankine method gives quite incorrect results. Further investigation on the lines adopted by Professor Hancock, will be very welcome. Our present scope prevents our entering further on the subject, which will be found best treated in Todhunter and Pearson's *History of Elasticity*.

Resilience.—The work done per unit volume of a material in producing strain is called *resilience*. Consider the case of a body subjected to a simple tensile strain. In going from the point A to the point B, Fig. 9, very near to it, the average stress acting is f. Therefore, if A B $= x$, the work done by the force f in straining the material from the point A to the point B will be equal to $f \times x$. Now, if x is the increase in unital strain and f is the intensity of stress, the volume of material acted upon is unity. Now, A B is assumed to be very small, and $f \times x$ is equal to the area of the shaded portion of the stress-strain curve.

Therefore, the resilience is equal to the area of the stress-strain curve up to the point M.

Digitized by Google

i.e., resilience = area of Δ P M X

$$= \frac{1}{2} f \times x$$

Now, $\frac{f}{x}$ = Young's modulus = E

$$\therefore \quad x = \frac{f}{E}$$

$$\therefore \quad \text{resilience in tension} = \frac{f^2}{2E}$$

similarly in shear the resilience = $\frac{s^2}{2E}$

where s is the shear stress.

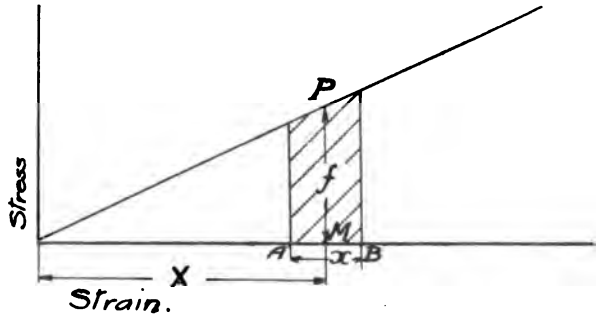

Fig. 9.—Resilience.

Repetition or Variation of Stresses.—In the design of structures, we very often have to deal with cases in which the stresses vary in amount from one time to another; such cases occur in the design of structures which have to resist wind-pressures and those which are subjected to rolling loads. In recent years, a large amount of investigation has been carried out on the strength of materials which are subjected to alternating stresses. The stress required to cause rupture in a material which is gradually increasingly stressed is called the *static breaking stress*, and is the stress obtained in the ordinary testing machines.

Fairbairn discovered in connection with some tests on wrought-iron girders, that a girder can be ruptured by repeatedly applying a load equal to about one-half of the static breaking load.

Digitized by Google

The first exhaustive investigation on the subject was conducted by Wöhler on behalf of the Prussian Ministry of Commerce, and was published in 1870. Wöhler's experiments extended over a period of twelve years, and had results which at the time were very startling, and the importance of which has only in comparatively recent years been appreciated by engineers.

The general result of these and subsequent experiments is to show that the stress necessary to rupture a material when such stress is repeated a very large number of times is considerably less than the static stress.

In Wöhler's experiments, which were carried out in tension, bending and torsion, some of the variations were from zero to a maximum in tension or compression and some were for a complete reversal of stress.

Full accounts of the experiments will be found in Unwin's *Testing of the Materials of Construction.* We will take some examples of his results :—

For Krupp's Axle Steel :

Statical breaking stress	=	52 tons per sq. in.
Breaking stress from zero to maximum	=	26·5 „ „ „
„ „ for reversed stresses	=	14·05 „ „ „

For Wrought Iron :

Statical breaking stress	=	22·8 tons per sq. in.
Breaking stress from zero to maximum	=	15·25 „ „ „
„ „ for reversed stresses	=	8·6 „ „ „

In the first case the *range* of stress is in one case 26·5 and in the case of reversal is − 14·05 to + 14·05, *i.e.*, 29·1, whereas the corresponding figures in the second case are 15·25 and 17·2.

Sir Benjamin Baker carried out similar experiments in this country and obtained similar results.

For mild steel of static strength from 26·8 to 28·6 tons per square inch, he obtained a breaking stress of 11·6 tons per square inch for a reversal of stress.

Bauschinger carried out a large number of experiments on the same lines as those of Wöhler, and extended them to a larger number of materials.

Digitized by Google

For Bessemer Steel his results were :

Static breaking stress	=	28·6 tons per sq. in.
Breaking stress from zero to maximum	=	15·7 „ „ „
„ „ for reversal stresses	=	8·55 „ „ „

With regard to these breaking stresses for variations of stress, it should be remembered that these are the least stresses for which the specimen would break after a very large number of repetitions.

In carrying out tests of this kind a number of specimens are

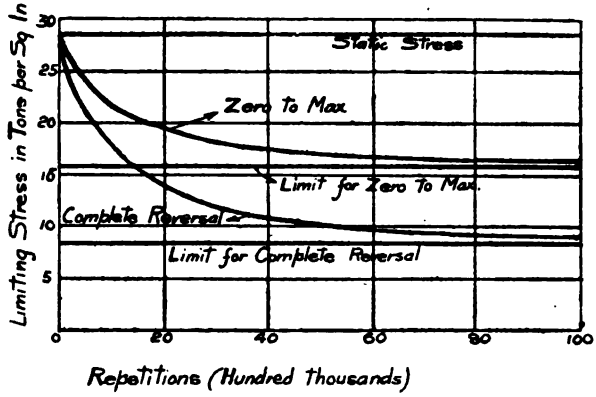

Fig. 10.—*Repetitions of Stress.*

taken, and the range or amount of variation of stress is altered for different specimens or sets of specimens, and when the range comes below a certain value the specimen will not break within the time over which the experiment lasts. The results are expressed on a diagram in which the range of stress is plotted against the number of repetitions required to cause fracture ; or, in the case of variations from zero to a maximum or of complete reversal of stress, the limit of stress is plotted against the number of repetitions. Such a curve is shown in Fig. 10. From such curves the *apparent* stress, at which an infinite number of repetitions could be made with fracture, is obtained, and this is taken as the least breaking stress. The word 'apparent' is used

Digitized by Google

because no record appears to exist of a number of repetitions more than about fifty millions, and it has been suggested that perhaps lower stresses still would be obtained if the repetitions were extended still more.

Bauschinger suggested that there was some relation between the range of stress which a material would stand and the elastic limit. This elastic limit was what he called the 'natural elastic limits,' *i.e.*, that obtained after the material has been subjected to variations of stress, as it is known that stressing a body beyond certain values alters its elastic limit.

Dr. Stanton and Mr. Bairstow have recently published in Vol. CLXVI. of *Proc. Inst. C.E.* an important paper on the subject, giving the results of experiments conducted at the National Physical Laboratory.

They used a machine in which the specimen formed part of the piston-rod in a steam-engine mechanism; the specimen thus was subjected to reversals of direct stress, and a variation in the limiting stresses was obtained by varying the relative dimensions of the mechanism.

This research has some important results, the principal ones of which are:

(*a*) An alteration of the rate of repetition from 60 to 800 per minute has no marked effect on the results obtained.

(*b*) The range of stress which moderately high-carbon steels can stand is comparatively greater than that for low-carbon steel and wrought iron. This confirms Wohler's opinion.

(*c*) The limiting stress which iron and steel can bear depends on the range of stress, and is almost independent of the actual values.

Although the authors agree that more work must be done before a definite statement can be made, their experiments go to support Bauschinger's theory as to the elastic limits.

They also found that the resistance of materials to reversals of stress is less when there is an abrupt change of section than when such change is gradual.

In these tests no number of repetitions greater than three

Digitized by Google

millions appear to have been made, and this appears to us to be a pity, as further information in this direction is urgently needed.

CAST IRON.—Very little work appears to have been done on repetitions of stress for cast iron, but from a small number of experiments by the author in reversal by bending the same general result was obtained, the limiting breaking stress in this case being nearly one-quarter of the static stress.

Unwin's Formula. — Unwin has given a formula from which the equivalent static stress for a given range of stress can be found.

This formula is :—

$$f_e = \frac{r}{2} + \sqrt{(f_s^2 - n\,r\,f_s)}$$

where f_e is the greatest stress that can be applied for an indefinite period for a range of stress r; f_s is the static breaking stress of the material, and n is a constant depending on the nature of the material.

For mild steel we may take $n = 1{\cdot}5$.

Now if the variation is from zero to f_e then $r = f_e$

$$\therefore f_e = \frac{f_e}{2} + \sqrt{f_s^2 - 1{\cdot}5\,f_e f_s}$$

Solving this equation we get $f_e = {\cdot}6 f_s$. For complete reversal $r = f_e - (-f_e) = 2f_e$.

$$\therefore f_e = f_e + \sqrt{f_s^2 - 3 f_e f_s}$$

$$\text{or, } f_e = \tfrac{1}{3} f_s.$$

(For the application of the repetition of stresses to the determination of working stresses, see Chap. II., p. 45.)

Stresses and Strains due to Sudden or Dynamic Loading.—If a load is applied suddenly to a structure, vibration will ensue, and the strain—and thus the stress—will reach twice the value which would occur if the load were gradually applied.

This will be made clear from considering a diagram, Fig. 11 (1), where the force is plotted against the strain. We have seen that, with gradual loading of an elastic body, the curve representing the relation between the strain and the load in direct stress is represented by a straight line A D, the area below the line

Digitized by Google

giving the work done up to a given point. Now let A G represent a force P; then when the strain gets to the point B, the work done by the force will be equal to the area of the rectangle A B E F, whereas the work done in straining the material is only equal to the area of the triangle A B E, so that there is an amount of work equal to the area of the triangle A E G still available for causing increased strain. The strain therefore increases until the area of the triangle E F D is equal to that of the triangle A E G. It

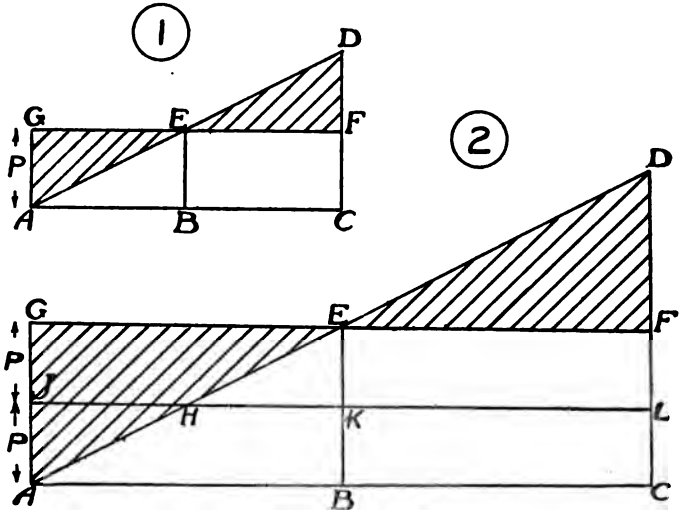

Fig. 11.—*Sudden or Dynamic Loading.*

is clear that A C = 2 A B, or *that the strain—and thus the stress—is twice that in the case of gradual loading.*

If a force is suddenly reversed from − P to + P, then the total strain and stress will be the same as that due to a sudden load of 2 P, and again when the strain reaches the point B, Fig. 11 (2), there will be an amount of work represented by the area of the triangle A E G still available for causing strain, which therefore continues to the point C. Thus the maximum tensile strain will be equal to H L. If the loading were gradual the strain would be H K, and as H L = 3 H K, we see that *a load suddenly reversed*

Digitized by Google

causes three times the strain and stress which occur if such reversal takes place slowly.

In each of these cases the *additional* strain or stress which occurs is equal to the amount of variation. Such additional stress has been called the *dynamic increment*, and we therefore see that *the equivalent gradual stress due to a sudden or dynamic stress* f_d *which varies by an amount v is given by* $f_d + v$.

Relation between Repetition of Stress and Sudden Loading.—The similarity between the results of experiments on the variation of stresses and the reasoning just given with regard to sudden loading has led many authorities to think that Wöhler's experiments were really experiments on sudden loading. The alternative point of view is that the two questions are distinct, and that therefore separate allowance should be made for each in the design of structures.

One of the first difficulties to overcome in reconciling the questions is that strain is not proportional to stress beyond the elastic limit, and that, therefore, beyond this point twice the strain would not cause twice the stress (see Fig. 2). There is, however, a second observed phenomenon to bring into the argument. It is known that if a material is strained beyond the elastic limit, the elastic limit will be found to have been raised on a subsequent testing; therefore, if this action goes on indefinitely with each repetition of stress, the elastic limit will ultimately become so high that the dynamic argument will apply up to the breaking point.

Although there are still many points which require to be decided in this controversy, for practical reasons we prefer to allow for one or the other, but not both, in the design of structures. The reason for this is as follows:—Suppose that the safe working stress for mild steel for a constant and gradual load is 7·5 tons per square inch. Then on the dynamic theory the safe stress for a reversing and sudden load is one-third of this, *i.e.*, 2·5 tons per square inch. If we now make a separate allowance for the repetition of stresses, our working stress would be $\frac{1}{3} \times 2{\cdot}5$, or ·8 ton per square inch. As there is no question of *impact* in this, this seems an absurdly low working stress.

Digitized by Google

Strain and Stress due to Impact.—Suppose a weight W falls from a height h on to a structure and let the deformation or strain in the direction of h be x, Fig. 12. Then the work done by the weight is equal to $W(h+x)$. Now this work is absorbed in straining the structure. Consider first the case in which the resulting strain is within the elastic limit. The work done in such case is equal to the volume multiplied by the resilience.

Fig. 12.

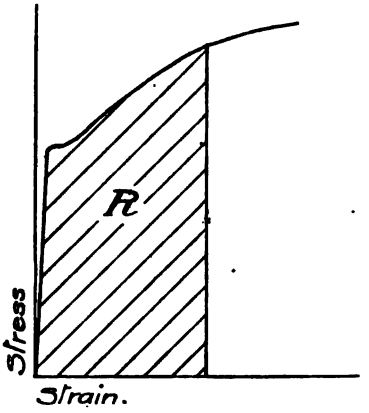

Fig. 13.

We have shown that in tension or compression the resilience is equal to $\frac{f^2}{2E}$ and therefore in this case we get $W(h+x) = \frac{\text{volume} \times f^2}{2E} = \frac{Vf^2}{2E}$. Then if x is negligible compared with h we have

$$W \times h = \frac{Vf^2}{2E}$$

or

$$f = \sqrt{\frac{2EWh}{V}}$$

If the weight strikes with a velocity v,

$$h = \frac{v^2}{2g}$$

or

$$f = \sqrt{\frac{2E \cdot Wv^2}{2gV}} = v\sqrt{\frac{EW}{gV}}$$

Digitized by Google

We will consider resilience in bending when dealing with the bending of beams.

STRAIN BEYOND ELASTIC LIMIT.—If the strain is beyond the elastic limit, it follows, from the reasoning given on p. 27, that the work done per unit volume in straining is equal to the area below the stress-strain curve. If this area is R, Fig. 13, then we have $R = W h$ or $\frac{W v^2}{2g}$

From this the stress can be found.

NUMERICAL EXAMPLE.—*A bar of* $\frac{1}{2}$*-inch diameter stretches* $\frac{1}{8}$ *inch under a steady load of* 1 *ton. What stress would be produced in the bar by a weight of* 150 *lb. which falls through* 3 *inches before commencing to stretch the rod—the rod being initially unstressed and the value of* E *taken as* 30×10^6 *lb. per square inch. (B.Sc. Lond. 1906.)*

Area of bar $\frac{1}{2}$" diam. = ·196 sq. in.

$$\therefore \text{ Stress under load of one ton} = \frac{1}{\cdot 196} \text{ tons per sq. in.}$$

$$= \frac{2240}{\cdot 196} \text{ lb. per sq. in.}$$

$$\therefore \text{ Strain} = \frac{\text{Stress}}{E} = \frac{2240}{\cdot 196 \times 30 \times 10^6}$$

Now $\frac{1}{8}$" = strain × original length

$$\therefore \text{ Original length} = \frac{\frac{1}{8}}{\text{Strain}} = \frac{\cdot 196 \times 30 \times 10^6}{2240 \times 8}$$

$$\therefore \text{ Volume} = \text{length} \times \text{area of section.}$$

$$= \frac{\cdot 196 \times \cdot 196 \times 30 \times 10^6}{8 \times 2240}$$

$$= 64{\cdot}33 \text{ cub. ins.}$$

Work done by 150 lb. in falling 3 inches = 3 × 150 = 450 in. lb.

$$\therefore \frac{64.33 \times f^2}{2E} = 450$$

$$f = \sqrt{\frac{900E}{64{\cdot}33}}$$

$$= \sqrt{\frac{900 \times 30 \times 10^6}{64{\cdot}33}}$$

$$= \underline{20{,}480 \text{ lb. per sq. in.}} \quad \textit{Ans.}$$

Digitized by Google

Temperature Stresses.— Suppose a bar of length l is heated $t°$ F. and a is coefficient of expansion. Then, unless prevented, the length of the bar will become $l(1 + a t)$, *i.e.*, the increase in length will be $a t l$.

If the bar is rigidly fixed so that this expansion cannot take place, then there will be in the bar a strain equal to $a t l$, and the unital strain will be $\frac{a t l}{l} = a t$.

This strain will produce a compressive stress of $a t \times E$, where E is Young's modulus.

Now for mild steel a = ·00000657 per degree Fahrenheit, and E = 13,000 tons per square inch.

$$\therefore \text{ The stress per } ° \text{F} = \cdot00000657 \times 13{,}000$$
$$= \cdot0854 \text{ tons per square inch.}$$

Taking a range of temperature of 120° F., the stress due to temperature = 120 × ·0854 = 10·25 tons per square inch. This is more than the safe stress for mild steel, so that the importance of designing structures so that the expansion may take becomes quite evident.

*** Heterogeneous Bars under Direct Stress.**—If a bar, composed of two different materials—such as steel and concrete, or steel and copper—firmly connected to each other, be subjected to a pull or a thrust, the two materials must be *strained* by equal amounts, and since the values of Young's modulus for the two materials are different the *stresses* in the two materials will be different.

Suppose one material has a cross-sectional area A and Young's modulus E, the resulting stress being f; and let the corresponding quantities for the other material be A_1, E_1, f_1.

Then, if under a pull or thrust P the unital strain is x, we have—

$$x = \frac{f}{E} \quad \ldots\ldots\ldots\ldots\ldots\ldots\ldots\ldots (1)$$

$$x = \frac{f_1}{E_1} \quad \ldots\ldots\ldots\ldots\ldots\ldots\ldots\ldots (2)$$

$$\text{and } P = Af + A_1 f_1 \quad \ldots\ldots\ldots\ldots\ldots (3)$$

Af and $A_1 f_1$ being the loads carried by each of the materials.

Digitized by Google

From (1) and (2) $f_1 = E_1 x = \frac{E_1 f}{E}$

$$\therefore \quad P = f\left(A + \frac{E_1 A_1}{E}\right) \qquad \ldots\ldots(4)$$

$$\text{or} \quad f = \frac{P}{A\left(1 + \frac{E_1 A_1}{E A}\right)} \qquad \ldots\ldots(5)$$

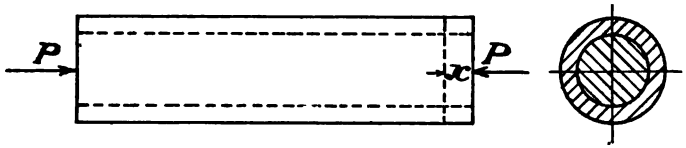

Fig. 14.

Now if a new bar is taken wholly of the first material of such area A_2 that the stress under a load P is the same as that in the compound bar, we have

$$f = \frac{P}{A_2}$$

$$\text{or } A_2 = A\left(1 + \frac{E_1 A_1}{E A}\right) \qquad \ldots\ldots(6)$$

This quantity A_2 may be called the *equivalent area of homogeneous material* and the consideration of this problem has become in recent years much more important on account of the progress made in reinforced concrete construction. We will deal further with this application in Chap. XV. Returning to the general problem we see that

$$f_1 = \frac{P}{A_1\left(1 + \frac{E A}{E_1 A_1}\right)} \qquad \ldots\ldots(7)$$

The load carried by the first material then comes equal to—

$$fA = \frac{P}{1 + \frac{E_1 A_1}{E A}} \qquad \ldots\ldots(8)$$

and that carried by the second comes equal to—

$$f_1 A_1 = \frac{P}{1 + \frac{E A}{E_1 A_1}} \qquad \ldots\ldots(9)$$

Digitized by Google

Since these are not the same, there will be an adhesive force tending to make one material move relatively to the other.

This will be equal to $f A - f_1 A_1$

$$= \frac{P}{\frac{E A + E_1 A_1}{E A}} - \frac{P}{\frac{E_1 A_1 + E A}{E_1 A_1}}$$

$$= \frac{P \cdot E A}{E A + E_1 A_1} - \frac{P \cdot E_1 A_1}{E A + E_1 A_1}$$

$$= \frac{P (E A - E_1 A_1)}{E A + E_1 A_1}$$

$$= \frac{P \left(1 - \frac{E_1 A_1}{E A}\right)}{1 + \frac{E_1 A_1}{E A}} \quad \ldots\ldots\ldots\ldots\ldots\ldots\ldots\ldots\ldots\ldots (19)$$

For examples on this see the chapter on Reinforced Concrete.

A table is appended giving the elastic properties of a number of materials of construction. In the use of such table it must be remembered that for many substances the properties vary according to the exact composition, and these figures should be used only if an actual test of the given material is impossible. It should also be remembered that, according to the French school of elasticians, the theoretical shear strength of a material is four-fifths of its tensile or compressive strength.

Digitized by Google

Elastic Properties of Materials.

	Material.	Weight per Cub. Feet (lb.)	Breaking Stress.			Elastic Moduli		Elastic Limit.
			Tension.	Crushing.	Shear.	E.	C.	
A	Mild steel	490	28–32	—	20–25	13,000	5200	15–20
	Wrought iron	480	20–25	16–22	16–19	12,500	5000	10–16
	Cast iron	440–470	5–15	25–65	6–13	5000–8000	2500–4000	—
	Copper	540	12–15	20–25	11–12	7000	—	3–8
	Gun-metal	,,	,,	25–40	9–12	5000	—	5–7
	Brass	520–530	10–12	—	—	6000	—	—
	Timber	30–50	$1\frac{1}{2}$–7	2–4	$\frac{1}{2}$–1	600–1000	—	—
B	Portland cement ...	90	500–700	4000–6000	—	—	—	—
	Gravel concrete (1 : 2 : 4)	120	300	3000	—	2×10^6 to 5×10^6	—	—
	,, ,, (1 : 3 : 6)	130	250	2500	—		—	—
	Cinder concrete ...	—	—	500	—	—	—	—
	Brick (London stock) ...	115	—	2000–3000	—	—	—	—
	,, (Staffordshire blue)	140	—	7000	—	—	—	—
	Brickwork in cement ...	100–150	—	1250–2500	—	—	—	—
	Portland stone	145	—	5000	—	—	—	—
	Sandstone	135–145	—	5000–10,000	—	—	—	—
	Granite	170	—	12,000–23,000	—	—	—	—

The stresses, &c., for materials A are in tons per square inch, and for materials B are in lb. per square inch.

Digitized by Google

CHAPTER II.

PRINCIPLES OF DESIGN; WORKING STRESSES, &c.; WIND PRESSURE.

Scientific Aspect of Design. — An engineer has been tersely described by a somewhat characteristic American as 'a man who can do for one dollar what a fool can do for two.' Although from an æsthetic standpoint this seems to be a somewhat too mundane description of the engineer's vocation, we must not forget that the most scientific construction is the one which best fulfils the conditions for the least cost. We seem to get into the habit, when looking with wonder on the wonderful structures of bygone ages, of thinking that such structures could not be built nowadays; but if this is true, is not the reason merely because we cannot afford them, and not that our hands have lost their cunning?

There is in reality no conflict between theory and practice in designing; each has its own place, and each is dependent on the other. The theory of structures will tell us what is the best design as far as the economical arrangement of material goes. The best-designed structure is one which would be about to collapse at all sections at the same time; or, in other words, the various parts are so designed that the stresses in them are equal. This is all that the theory sets out to do. Practice, on the other hand, determines whether the theoretical design is in reality the cheapest in the end. Questions of workmanship, cost of erection and upkeep have to be considered, and it is only by balancing these with the theory that the really scientific design is obtained.

In dealing with the theoretical side of design we must never forget that, if we are to be guided by theory at all, we should see that we use the best theory. The disdain for theory that ultra-practical men often possess is largely due to the fact that their theoretical knowledge is not sufficiently comprehensive; they have not realised the conditions which have to be fulfilled before a certain theory is applicable, and so they probably use some formula for a case for which it was never intended.

Digitized by Google

Another point to be remembered is that practical rules for use in design are not necessarily sound because the structures resulting therefrom satisfactorily fulfil their function. Such rules may make the structure much heavier, and therefore much more costly, than necessary. Our aim in the theoretical investigations should be to eliminate as many uncertainties as possible, and not to be merely content in erecting something which will stand.

Commercial Aspect of Design.—If the word 'scientific' is used in its best sense, the commercial aspect differs very slightly from the scientific aspect. There are certain points, however, that we would like to deal with which point to the necessity of considering the merely commercial aspects. Firstly, there is the question of the sizes of sections adopted. Care should be taken that as much as possible is used of the same section, and that such section should be easily obtainable. The cost of a given structure may be increased largely because a section is specified which has to be rolled specially—although sections figure in makers' catalogues they are not always readily obtainable. In riveted work, too, much additional cost is often involved by an unnecessarily irregular pitch of the rivets, and fancy forms of cleated connections are often shown which have no advantage over the simple forms. We will deal with these points in greater detail in considering the separate designs in subsequent chapters.

The designer should avoid curved lines wherever possible in his design. It costs a lot to cut plates to a curve, and there is generally no reason for them. Some might urge that curved forms are more pleasing to the eye, and some go as far as to put cast-iron rosettes on the plates of plate-girders. But it is better to agree that no steel structure is artistically beautiful, and that to attempt to decorate it by curved gusset plates and rosettes is to make it really more ugly, because it has cost more and is still an eye-sore to the artist. There is, also, a theoretical objection to curved members, viz., that the loading on such bars is eccentric, and stresses are therefore much increased.

Where practice necessitates our putting theory aside somewhat, we should always keep this in mind in our calculations. For instance, theoretically the centre-line of the rivets in a T section should coincide with the centroid line of the section. In practice

Digitized by Google

this is impossible, as the head of the rivet could not then be closed. But we must remember in designing structures using such sections as the ties or struts that the load is eccentric and that due allowance must be made for this.

Working Stresses and Factor of Safety.—The question of the working stresses to adopt in practice is of the utmost importance, and if our design is to be of any real value we must have clear ideas as to such working stresses.

In dealing with working stresses we often speak of the **factor of safety.** This may be defined as the factor by which the working stresses may be multiplied to give stresses which will result in failure. This phrase is one which is often used glibly without any real meaning; and it has been suggested that in many cases it would be better called the factor of ignorance. If we design a structure with a factor of safety of four, say, we certainly do not as a rule mean that the structure could bear four times the load without failure. This is because there are certain contingencies that we do not allow for in our design. Our aim should be, however, to make our calculations so that the factor of safety has as exact a meaning as possible. This can be done only by choosing our working stresses skilfully and by making allowance for as many points as possible. For steel-work it is common to adopt as a working stress in tension, one-quarter of the breaking stress in tension and to say therefore that the factor of safety is 4. Many designers forget, however, to make the due allowance for live or variable loads. The basing of the factor of safety on the breaking stress is also open to a very serious objection, viz.: that the *elastic limit* of the material is the point which really determines the safety of the structure. If the stresses are above the elastic limit, failure is almost certain to ensue, especially in the case of compression members or struts. Professor Arnold has recently drawn fresh attention to the importance of this point. It would, therefore, be better to base the working stresses on the elastic limit and specify for a definite minimum value of such limit in the steel. The point commonly urged against this method of procedure—viz., that the elastic limit is a much more variable quantity than the breaking stress—seems to us to be one in favour of its adoption. It is certain

Digitized by Google

that stresses beyond the elastic limit are very dangerous for any structure, and if this quantity is a variable one we ought to know it for the material that we are using, and base our working stresses on it accordingly. We would suggest that the dead-load or static working stress should be taken as one-half of the true elastic limit.

The following tables of stresses may be used for obtaining the working stresses for *dead loads* in design :—

Material.	Working Stress in Tons.			Dimensions of Stresses.
	Tension.	Compression.	Shear.	
Mild steel ...	7	6	5	tons per sq. in.
Wrought iron ...	5	4	4	,, ,,
Cast iron ...	½	4	½	,, ,,
Oak	16	13	5 (across grain)	cwt. per sq. in.
Pine, yellow ...	3	6	3 (across grain)	,, ,,
Cement concrete 1 : 2 : 4.	60	600 (bending)	60	lb. per sq. in.
		500 (direct)		,, ,,
Granite	—	35	—	tons per sq. ft.
Sandstone Yorkstone	—	20	—	,, ,,
Limestone ...	—	15	—	,, ,,
Brickwork in cement mortar	·5 (adhesion)	8	—	,, ,,
,, in lime mortar	·4 (adhesion)	6	—	,, ,,

Allowance for 'Live' Loads or Variable Loads.—There are two principal methods of allowing for live loads which are in effect the same.

(*a*) EQUIVALENT DEAD-LOAD METHOD.—According to this method the static stresses are used and the loads are increased to

Digitized by Google

give the equivalent dead load. The ways for allowing this, are:

(1) equivalent dead load = dead + 2 live load.

This may be called the dynamic formula.

(2) equivalent dead load

$$= w_e = \frac{n r + \sqrt{n^2 r^2 + 4 \left(w - \frac{r}{2}\right)^2}}{2}$$

Where r is the variation of load, and w is maximum load, n being a constant which may be taken as 1·5 for steel. This formula is deduced from Unwin's formula for Wöhler's experiments.

For steel we get

$$w_e = \frac{1{\cdot}5\, r + \sqrt{2{\cdot}25\, r^2 + 4 \left(w - \frac{r}{2}\right)^2}}{2}$$

When the variation is from zero to a maximum, we have $r = w$.

Then $w_e = 2{\cdot}1\, w$.

(3) equivalent dead load = maximum load + variation.

(b) VARIABLE WORKING STRESS METHOD.—According to this method the working stress is varied according to the relative amounts of live and dead loads.

The common ways of allowing for this are:

(1) Launhardt-Weyrauch method.

$$\text{Working stress} = \frac{f}{1{\cdot}5}\left(1 + \frac{1}{2} \times \frac{\text{minimum load}}{\text{maximum load}}\right)$$

f being the static or dead-load working stress.

(2) Dynamic method.

$$\text{Working stress} = \frac{f}{1 + \frac{\text{live load}}{\text{total load}}}, \text{ } f \text{ being as before.}$$

Take as a simple numerical example the case of a member of a roof truss in which the dead load is a tension of 5 tons, and the wind on one side causes a tension of 2 tons and on the other side a compression of 1 ton. The various methods give the following results:—

Digitized by Google

(*a*) (1) Equivalent dead load $= 5 + 2 \times 2 = 9$ tons.

(2) " " $= \dfrac{1{\cdot}5 \times 3 + \sqrt{2{\cdot}25 \times 9 + 4\left(7 - \frac{3}{2}\right)^2}}{2}$

$= 8{\cdot}2$ tons.

(3) " " $= 5 + 3 = 8$ tons.

(*b*) (1) Working stress $= \dfrac{f}{1{\cdot}5}\left(1 + \dfrac{4}{14}\right)$

$= \dfrac{6f}{7}$

(2) " " $= \dfrac{f}{1 + \frac{2}{7}} = \dfrac{7f}{9}$

Assuming the material to be mild steel.

(*b*) (1) comes working stress = 6 tons per square inch.

(2) " " = 5·4 " " "

Taking the material as mild steel, the requisite number of square inches in the sectional area of the tie, are—

(*a*) (1) $\dfrac{9}{7} = 1{\cdot}28$ square inch.

(2) $\dfrac{8{\cdot}2}{7} = 1{\cdot}17$ " "

(3) $\dfrac{8}{7} = 1{\cdot}14$ " "

(4) $\dfrac{7}{6} = 1{\cdot}17$ " "

(5) $\dfrac{7}{5{\cdot}4} = 1{\cdot}30$ " "

If consideration of variation of stresses be neglected altogether, we should have—area $= \dfrac{5+2}{7} = 1$ square inch.

WIND PRESSURE.

From the very nature of the subject, the pressure due to the wind is one of the most troublesome factors to allow for in the Theory of Structures. Until the Tay Bridge disaster in 1879, comparatively little attention was given to the subject by engineers, and although since that date much valuable information has been collected, we still know comparatively little of the action of wind on structures in the neighbourhood of other structures. The

Digitized by Google

pressure due to wind has been measured experimentally in three principal ways.

(1) By calculating the pressure necessary to overturn railway vehicles which have been overturned by the wind. The maximum pressure obtained in this way comes at about 30 lb. per sq. ft.

(2) By measuring the velocity of wind by anemometer and deducing the pressure therefrom. Smeaton's formula, published in 1759, is that $p = \cdot005\ V^2$ where V is the velocity in miles per hour, and p the pressure in pounds per square foot. This formula is now considered as giving results too high, and from the experiments at the National Physical Laboratory (Vol. CLVI., *Proc. Inst. C.E.*) the formula has been deduced as $p = \cdot0027\ V^2$.

(3) By measuring the pressure on plates exposed to the wind. A large number of exceedingly valuable experiments of this kind were made by the late Sir B. Baker prior to the erection of the Forth Bridge, and records have been kept up since that date. The following figures, taken from an excellent paper by Mr. Adam Hunter, A.M.I.C.E. (Vol. XVII., 4, *Jour. Junior Inst. of Engineers*, show the maximum results of some of these experiments.

Year.	Date	Pressure in pounds per square foot.					Direction of wind.
		Revolving gauge. 1·5 sq. ft.	Small fixed gauge. 1·5 sq. ft.	Large fixed gauge. 300 sq. ft.	In centre of large fixed gauge. 1·5 sq. ft.	Right-hand top of large gauge.	
1884	Oct. 27	29	23	18	—	—	S.W.
,,	,, 28	26	29	19	—	—	S.W.
1885	Mar. 20	30	25	17	—	—	W.
,,	Dec. 4	25	27	19	—	—	W.
1886	Mar. 31	26	31	19	28·5	22·0	S.W.
1887	Feb. 4	26	41	15	—	—	S.W.
1888	Jan. 5	27	16	7	—	—	S.E.
,,	Nov. 17	35	41	27	—	—	W.
1889	,, 2	27	34	12	—	—	S.W.
1890	Jan. 19	27	28	16	—	—	S.W
,,	,, 21	26	28	15	—	—	W.
,,	,, 25	27	24	18	23·5	22	W.S.W.
Average		27·6	29·8	16·9	—	—	—

Digitized by Google

Since the erection of the bridge records have been kept on small gauges 1·5 square feet in area placed at different heights above high-water level. The following figures show the maximum pressures recorded, the two readings at 214 ft. being at the respective ends of the bridge.

Year	Date.	Pressure in pounds per sq. foot at various heights.				
		50 ft.	163 ft.	214 ft.	214 ft.	378 ft.
1901	Jan. 26	—	15	25	—	65
,,	Nov. 23	—	50	55	55	60
1902	Dec. 13	—	27·5	31	34	18
1903	Jan. 10	15	20	25	27·5	60
,,	,, 31	—	19 5	29	26	65
,,	Mar. 18	20	20	25	29	31
,,	,, 21	10	20	20	22·5	54
1904	,, 26	—	20	32	27	52
,,	Dec. 29	—	22·5	22·5	32·5	—
1905	Jan. 21	—	21	30	23	—
,,	Mar. 18	—	32·5	32·5	42	60
,,	Feb. 28	10	22	20	20	38
1906	Jan. 26	15	—	—	—	59
,,	,, 11	10	20	23·5	25	30
,,	Feb. 8	10	15	25	25	55
Average		13 0	23·0	28·0	30·0	50·0

The following points may be inferred from these experiments in which the gauges were placed vertically.

(1) The pressure of wind increases with the height from the ground. This may be explained as being due to a dragging or frictional effect which the ground has on the wind.

(2) The pressure on small surfaces is considerably less than that on larger surfaces, the wind acting in local gusts. In the above experiments the revolving gauge always faced the direction of the wind, and the fixed gauges faced E. and W. We may infer from the above that the average pressure on a large area is about two-thirds that obtained from anemometer records in the neighbourhood.

Digitized by Google

(3) The pressure on a small area surrounded by a larger area is somewhat, but not much, smaller than that on a small area alone, so that the effect of the edges is not very appreciable.

Inasmuch as larger pressures than 30 lb. per square foot on a large area occur very seldom, Mr. Hunter, in the above paper, suggests that a pressure of 30 lb. per square foot in sufficient to design for in practice.

This seems to be a very reasonable suggestion, provided that the wind pressure is treated as a *live load* in calculating the stresses.

Various authorities and regulations adopt pressures of 40, 50, and 56 lb. per square foot, and when the higher figures are adopted the wind pressure may be taken as if it were a *dead* load.

Direction of Wind Pressure and Pressures on Inclined Surfaces.—The pressure due to the wind is always taken as acting perpendicularly to the surface on which it acts.

When the surface is inclined to the vertical, the wind pressure is obtained in terms of the pressure on a vertical surface. Let θ be the inclination of the surface to the horizontal, and P_v the pressure on a vertical surfaee.

Then according to the formula based on Hutton's experiments

$$P_\theta = P_v \sin \theta^{1\cdot84 \cos \theta - 1}$$

According to Duchemin's formula

$$P_\theta = P_v \cdot \frac{2 \sin \theta}{1 + \sin^2 \theta}$$

A very simple rule suggested by Prof. Karl Pearson is to take P_v as 50 lb. per square foot and P_θ as as many lb. per square foot as there are degrees inclination in θ, up to the value $\theta = 50°$ and take the value 50 for all values beyond.

This rule may be put in more general terms as follows:

$$P_\theta = \frac{P_v \times \theta}{50} \text{ up to } \theta = 50°, \text{ beyond which } P_\theta = P_v$$

Although more complicated than the accuracy of any experiments on wind pressure would seem to justify, Hutton's formula has been adopted most generally, and so we give the following

Digitized by Google

table for use therewith. The co-efficients in this table are those by which P_v should be multiplied to give P_θ.

θ	5°	10°	20°	Span* / 4	30°	40°	50°	60°	70°	80°	90°
—	·125	·24	·45	·59	·66	·83	·95	1·00	1·02	1·01	1·00

WIND PRESSURE ON COLUMNS AND CHIMNEYS.—The total wind pressure, which may be taken as acting at the centroid, on chimneys and columns of square section may be taken as $P_v \times A$, where A is the area of the vertical cross section.

For round sections Pressure = ·5 P_v . A
„ hexagonal „ „ = ·65 P_v . A
„ octagonal „ „ = ·75 P_v . A

BOARD OF TRADE RECOMMENDATIONS FOR WIND PRESSURE ON RAILWAY STRUCTURES.

Extract from the Report, dated May, 1881, of the Committee appointed by the Board of Trade to consider the Question of Wind Pressure on Railway Structures.

'We are of opinion that the following rules will sufficiently meet the cases referred to:—

'(1) That for railway bridges and viaducts a maximum wind pressure of 56 lb. per square foot should be assumed for the purpose of calculation.

'(2) That where the bridge or viaduct is formed of close girders, and the tops of such girders are as high or higher than the top of a train passing over the bridge, the total wind pressure upon such bridge or viaduct should be ascertained by applying the full pressure of 56 lb. per square foot to the entire vertical surface of one main girder only. But if the top of a train passing over the bridge is higher than the tops of the main girders, the total wind pressure upon such bridge or viaduct should be ascertained by applying the full pressure of 56 lb. per square foot to the entire vertical surface from the bottom of the main girders to the top of the train passing over the bridge.

'(3) That where the bridge or viaduct is of the lattice form or

* This is the common pitch for roof trusses, height = $\frac{\text{span}}{4}$

Digitized by Google

of open construction, the wind pressure upon the outer or windward girder should be ascertained by applying the full pressure of 56 lb. per square foot, as if the girder were a close girder, from the level of the rails to the top of a train passing over such bridge or viaduct, and by applying in addition the full pressure of 56 lb. per square foot to the ascertained vertical area of surface of the ironwork of the same girder situated below the level of the rails or above the top of a train passing over such bridge or viaduct. The wind pressure upon the inner or leeward girder or girders should be ascertained by applying a pressure per square foot to the ascertained vertical area of surface of the ironwork of one girder only situated below the level of the rails or above the top of a train passing over the said bridge or viaduct, according to the following scale, viz. :—

'(*a*) If the surface area of the open spaces does not exceed two-thirds of the whole area included within the outline of the girder, the pressure should be taken at 28 lb. per sq. ft.

'(*b*) If the surface area of the open spaces lies between two-thirds and three-fourths of the whole area included within the outline of the girder, the pressure should be taken at 42 lb. per sq. ft.

'(*c*) If the surface area of the open spaces be greater than three-fourths of the whole area included within the outline of the girder, the pressure should be taken at the full pressure of 56 lb. per sq. ft.

'(4) That the pressure upon arches and the piers of bridges and viaducts should be ascertained as nearly as possible in conformity with the rules above stated.

'(5) That in order to ensure a proper margin of safety for bridges and viaducts in respect of the strains caused by wind pressure, they should be made of sufficient strength to withstand a strain of four times the amount due to the pressure calculated by the foregoing rules. And that, for cases where the tendency of the wind to overturn structures is counteracted by gravity alone, a factor of safety of two will be sufficient.'

The above notes on wind pressure should give sufficient information to enable the reader to see what pressure per square foot to adopt for the pressure of wind in design. We will deal with the manner in which the stresses due to wind pressure are calculated in later portions of this book, and in particular the stresses in roof trusses due to wind will be dealt with at considerable length in the chapter on Framed Structures.

Digitized by Google

CHAPTER III.

FORCES, AREAS, AND MOMENTS.

Graphical Consideration of Resultant of Force System.—Forces are **rotor** quantities, *i.e.*, they can be represented in **magnitude, direction, and position** by straight lines, and so the magnitude and direction, but not necessarily the position, of a number of forces is given by the **law of vector addition**, viz.:—The resultant or sum of a number of vector quantities (*i.e.*, those having magnitude and direction but not

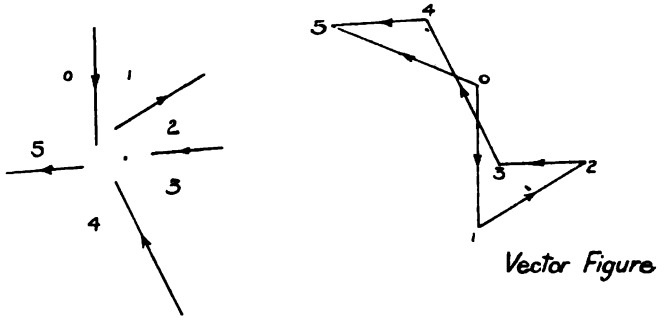

Fig. 15.—*Vector Polygon Construction.*

position) is obtained by placing them end to end, preserving their directions and a continuous sense of their arrow-heads. The final step from the beginning of the first vector to the end of the last is termed the vector sum.

In dealing with vector quantities we shall find it very convenient to use **Bow's notation**, *i.e.*, to number or letter the spaces between the vectors, denoting any particular vector by the spaces between which they lie. Suppose for example 0, 1; 1, 2; 2, 3; 3, 4 (Fig. 15) represent a number of forces in one plane. To some convenient scale, draw 0, 1 on a vector figure to represent the force 0, 1 in magnitude and direction; then from 1 draw

Digitized by Google

1, 2 to represent the force 1, 2 in magnitude and direction, and so on until the last force 4, 5 is reached. Then the line joining the first point in the vector figure to the last point, *i.e.*, 0, 5, will give the magnitude and direction of the resultant of the forces, and the line 0, 5 is called the closing line of the **vector polygon**. Now if the given forces are in equilibrium they can of course have no resultant, and so the first and last points of the vector polygon of a number of forces in equilibrium must coincide.

In dealing with problems in which we wish to find the resultant of a number of forces, we usually require to know the **position** as well as the magnitude and direction of the resultant;

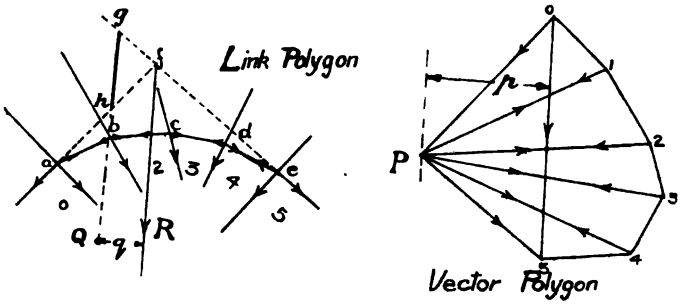

Fig 16.—*Link and Vector Polygon Construction.*

and unless all the forces pass through the same point, in which case the resultant will also pass through that point, some separate construction must be used. Such construction is known as the **link and vector polygon** construction, and is as follows:— Let 0, 1; 1, 2 (Fig. 16), and so on, be a number of forces not necessarily parallel nor concurrent. To some suitable scale set down on a vector figure 0, 1, 2, and so on, then as before the closing line 0, 5 gives the magnitude and direction of the resultant. Now take any point or pole P at any convenient position on the paper and join P, 0; P, 1; and so on. Then draw anywhere across the line of action of the first force a line *a*, *f*, parallel to P, 0 and cutting the line of action of the force in *a*; across space 1 draw *a*, *b* parallel to P, 1; across space 2 *c*, *d* parallel to P, 3, and so on until the last line or link parallel to P, 5

Digitized by Google

is reached. Produce this last link to meet the first link in *f*, then the resultant R will pass through the point *f*, and the figure *a*, *b*, *c*, *d*, *e*, *f* is called the *link polygon*, or by some writers the *funicular polygon.*

PROOF.—By the law of vector addition, the force o, 1 on the vector figure is equivalent to forces o P, P 1 acting in *f a* and *a b*; the force 1, 2 is equivalent to forces 1 P, P 2 acting in *b a* and *b c*, and so on, the last force 4, 5 being equivalent to forces 4 P, P 5 acting in *d e* and *f e*. It will be seen that with the exception of the forces down *f a* and *f e* all these forces neutralise each other, and so the resultant of the whole system of forces is the same as that of *f a* and *f e*, and therefore acts at the point of intersection *f* of these forces.

This construction will fail if the first and last links are parallel, and if this happens, either (*a*) P has been chosen on the line o, 5 or (*b*) the vector polygon closes (o and 5 coincide), in which case the forces are in equilibrium or else reduce to a couple.

We shall have constant application of this link and vector polygon when we come later to consider bending moments and stress diagrams for wind pressure, &c., but the student should make himself familiar with the construction at this stage by trying some examples on the drawing-board.

Resultant of Forces by Trigonometrical Resolution.—If a force F_1 act at an angle θ_1 to any reference line o x,

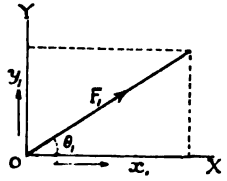

Fig. 17.

Fig. 17, then the components of the force in this direction and at right angles to it are given by :

$$x_1 = F_1 \cos \theta_1$$

$$y_1 = F_1 \sin \theta_1$$

Now suppose there are a number of forces F_1, F_2, F_3 and . . . .

Digitized by Google

F_n acting at angles θ_1, θ_2, θ_3 . . . . θ_n, then the total component in the direction o x is given by—

$$X = F_1 \cos \theta_1 + F_2 \cos \theta_2 + \ldots . F_n \cos \theta_n.$$

This is written for convenience—

$$X = \sum_1^n (F \cos \theta) \quad \ldots\ldots\ldots\ldots\ldots\ldots\ldots\ldots (1)$$

And similarly the total component at right angles to o Y is given by—

$$Y = F_1 \sin \theta_1 + F_2 \sin \theta_2 + \ldots . F_n \sin \theta_n$$

$$i.e., \quad Y = \sum_1^n (F \sin \theta) \quad \ldots\ldots\ldots\ldots\ldots\ldots\ldots\ldots\ldots\ldots (2)$$

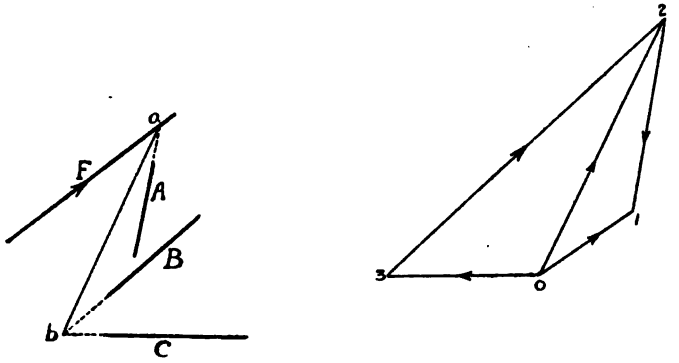

Fig. 17*a.*—*Resolution of a Force in Three Directions.*

Then if the magnitude of the resultant is R and the inclination to the direction o x is α, we have from equations (1) and (2)—

$$R = \sqrt{X^2 + Y^2}$$

$$\tan \alpha = \frac{Y}{X}$$

If all the forces are not concurrent, then as before some additional means must be used to obtain the position of this resultant; in this case this is effected by the Principle of Moments, which we will consider later.

Resolution of a Force in Three Directions, not Concurrent.—A force F can be resolved in three directions,

Digitized by Google

A B C, as follows. Produce one of the lines, say A, to meet the line of action of the force at *a*, Fig. 17*a*, and produce the other two directions to meet at *b*; set out a length 0, 1 to represent the force F and draw 1, 2; 0, 2 parallel respectively to the direction A and the line *a*, *b*; and then draw 0, 3 parallel to one of the other directions, say C, and 2, 3 parallel to the remaining direction B, and 1, 2; 2, 3; and 3, 0 then give the resolved portions in the three required directions.

The Determination of Areas.— (*a*) MATHEMATICAL METHOD.—If F (*x*) represents a function of *x* and the graph

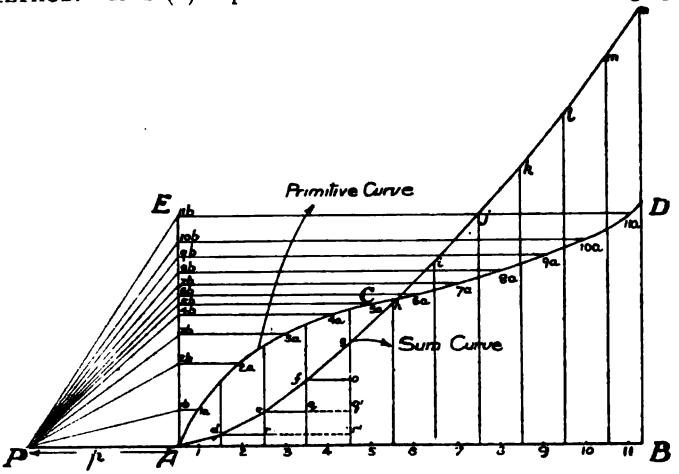

Fig. 18.—*Sum Curve Construction.*

of the function be drawn, then the area between graph and the axis of *x* is given by the expression:

$$\mathbf{A} = \int \mathrm{F}(x)\, d\, x.$$

In practice, in the determination of areas, this method may become practically unworkable if the equation of the curve cannot be simply expressed or if the integration cannot be performed. As these conditions often occur we have to rely on the planimeter or on the following

(*b*) GRAPHICAL METHOD.—If a curve be plotted on a hori-

Digitized by Google

zontal base and a new curve be drawn, such that its ordinate at any point represents the area of the given curve up to that point, the new curve is called the **Sum curve** or **Integral curve** of the given curve, which is called the **Primitive curve.**

The sum curve can be obtained graphically as follows: Let A C D, Fig. 18, be any primitive curve on a straight base A B. Divide A B into any number of parts, not necessarily equal (but for convenience of working they are generally taken as equal). These so-called base elements should be taken so small that the portion of the curve above them may be taken as a straight line. About 1 cm. or ·4 in. will usually be a suitable size and in most cases a smaller element 11 will come at the end. Find the mid-points, 1, 2, 3, &c., of each of the base elements and let the verticals through these mid-points meet the curve in $1a$, $2a$, $3a$, &c. Now project the points on to a vertical line A E, thus obtaining the points $1b$, $2b$, $3b$, &c., and join such points to a pole P on A B produced and at some convenient distance p from A. Across space 1 then draw A d parallel to P $1b$; de across space 2 parallel to P $2b$, and so on, until the point n is reached. Then the curve A $de \ldots . n$ is the sum curve of the given curve, and to some scale B n represents the area of the whole curve.

PROOF.—Consider one of the elements, say 4, and draw fo horizontally.

Now $\Delta f, g, o$ is similar to the Δ P, $4b$, A

$$\therefore \frac{go}{fo} = \frac{4b, \text{A}}{\text{P A}}$$

but P A $= p$ and $4b$, A $= 4, 4a$

$$\therefore go = \frac{fo \times 4, 4a}{p} = \frac{\text{area of element 4 of curve}}{p}$$

Similarly $fq = \dfrac{\text{area of element 3 of curve}}{p}$ and so on.

$\therefore$ Ordinate through $g = go + fq + \ldots .$

$$= \frac{\text{area of first four elements of curve}}{p}$$

$\therefore$ The curve A $de \ldots . h$ is the sum curve required.

Digitized by Google

Then if B n be measured on the vertical scale and p be measured on the horizontal scale, the area of the whole curve will be equal to $p \times$ B n.

It is obviously advisable to make p some convenient round number of units.

The sum curve obtained by this method may have the same operation performed on it, and thus the second sum curve of the primitive curve is obtained, and so on.

If the operation be performed on a rectangle, the sum curve will obviously come a sloping straight line, and if the sum curve

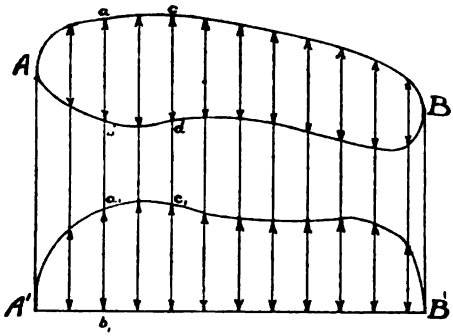

Fig. 19.

of a sloping straight line be drawn, it will be found to be a parabola. In the case in which it is required to apply this construction to a curve which is not on a straight base, the curve is first brought to a straight base as follows:

Suppose A c B d, Fig. 19, is a closed curve. Draw verticals through A B to meet a horizontal base A^1 B^1. Divide the curve into a number of segments by vertical lines at short distances apart, and set up from the base A B lengths a_1, b_1, &c., equal to the vertical portions a, b, &c., on the curve. Joining up the points thus obtained we get the corresponding curve $A' c_1 B'$, on a straight base.

(*c*) SIMPSON'S RULE.—Divide the base into an even number of equal parts (each equal to c) and measure all the corresponding ordinates.

Digitized by Google

Then area of curve is equal to:

$$\frac{1}{3} C \left\{ \begin{matrix} \text{twice sum of} \\ \text{even ordinates} \end{matrix} + \begin{matrix} \text{four times sum of} \\ \text{odd ordinates} \end{matrix} - \begin{matrix} \text{sum of first} \\ \text{and last ordinates} \end{matrix} \right\}$$

(*d*) PARMONTIER'S RULE. — Divide up base and measure ordinates as above, then area of curve is equal to:

$$2C \times \begin{matrix} \text{sum of odd} \\ \text{ordinates} \end{matrix} - \frac{C}{6} \left\{ \left(\begin{matrix} \text{second} \\ \text{ordinate} \end{matrix} - \begin{matrix} \text{first} \\ \text{ordinate} \end{matrix} \right) - \left(\begin{matrix} \text{last} \\ \text{ordinate} \end{matrix} - \begin{matrix} \text{preceding} \\ \text{ordinate} \end{matrix} \right) \right\}$$

Moments.—FIRST MOMENTS.

The product of a $\left\{ \begin{matrix} \text{force } (f) \\ \text{mass } (m) \\ \text{area } (a) \\ \text{volume } (v) \end{matrix} \right\}$ by its distance r from a given point or axis is called the *first moment* of the $\left\{ \begin{matrix} \text{force} \\ \text{mass} \\ \text{area} \\ \text{volume} \end{matrix} \right\}$ about the given point or axis, or commonly simply the moment.

In the case of a **force**, the moment measures the tendency of the force to turn about the given point or axis, and according as such turning would take place in one direction or the other we get positive and negative moments, the clockwise direction being usually taken as positive and the anti-clockwise direction as negative. Now if a rigid body is in equilibrium under a given system of forces, it can have no tendency to turn about any point or axis, and so we get the following fundamental rule:—

The algebraic sum of the moments of a system of forces on a rigid body in equilibrium about any point or axis is zero.

The following elementary numerical examples will show two applications of this theorem to the theory of structures: several further examples will occur in the course of the book, and those new to the subject should work the examples given at the end of the book.

EXAMPLE 1.—*A freely supported beam of 20 ft. span carries loads of ½ ton, ¼ ton, 1 ton, and 2 tons at distances apart as shown in Fig. 20. Determine the reactions* R_A *and* R_B *at the ends.*

Now the beam is in equilibrium under the loads and reactions, and therefore the vector sum of the forces is zero. In the case of parallel forces the vector sum is equal to the algebraic sum.

$\therefore$ We have $R_A + R_B = \frac{1}{2} + \frac{1}{4} + 1 + 2 = 3{\cdot}75$ tons.

Digitized by Google

To determine R_A take moments round B, thus eliminating the moment of R_B.

We then have—

Moment of $W_1 = 17 \times \frac{1}{2} = 8{\cdot}50$ ft. tons.
„ „ $W_2 = 13 \times \frac{1}{4} = 3{\cdot}25$ „ „
„ „ $W_3 = 1 \times 7 = 7{\cdot}00$ „ „
„ „ $W_4 = 4 \times 2 = 8{\cdot}00$ „ „
Total moment of weights = 26·75 „ „

This is the anti-clockwise moment, and must be equal to the clockwise moment $R_A \times 20$.

$$\therefore \text{We have } 20\ R_A = 26{\cdot}75.$$

$$\therefore R_A = \frac{26{\cdot}75}{20} = \underline{1{\cdot}337 \text{ tons.}}$$

say $\underline{1{\cdot}34}$

$$\therefore R_B = 3{\cdot}75 - 1{\cdot}34$$
$$= \underline{2{\cdot}41 \text{ tons.}}$$

As a check to the accuracy of the calculations R_B could be found by taking moments about A.

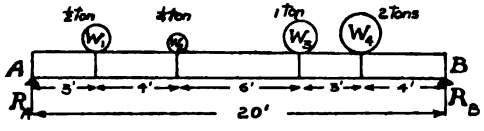

Fig. 20.

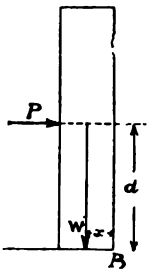

Fig. 21.

EXAMPLE 2.—*A wall* 18 *ins. thick and* 8 *feet high weighs* 6 *tons. Find what pressure, due to the wind acting at the centre of the wall, would be necessary to overturn the wall.*

Taking moments round the point B, Fig. 21, the clockwise moment due to the wind is equal to $P \times d$, while the anti-clockwise moment due to the weight of the wall is $W \times x$. When the wall is just about to overturn, these will be equal.

$$\therefore P \times d = W \times x$$

$$4\ P = \frac{10 \times 9}{12}$$

$$P = \frac{10 \times 9}{12 \times 4} = \underline{1{\cdot}875 \text{ tons.}}$$

Digitized by Google

GRAPHICAL DETERMINATION OF THE FIRST MOMENT OF A NUMBER OF FORCES ABOUT A GIVEN POINT.—This we obtain by means of the link and vector polygon construction (see Fig. 16).

Suppose the moment of the given force system is required about the point Q. Through Q draw a line parallel to the resultant R to cut the first and last links produced in $g \times h$. Then if the point P is at perpendicular or polar distance p from 0, 5 on the vector figure, moment of force system about Q is equal to $g h \times p$, $g h$ being read on the space scale and p on the force scale.

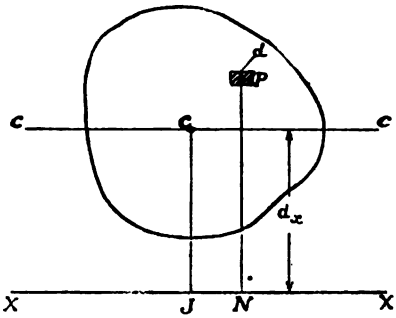

Fig. 22.—First Moment of an Area.

PROOF.—The triangles $f g h$, P, 0, 5, are similar.

$$\therefore \quad \frac{g h}{q} = \frac{0, 5}{p}$$

$$\therefore \quad p \times g h = 0, 5 \times q$$

but 0, 5 = resultant R and q is distance of R from Q.

$\therefore$ 0,5 $\times$ q = moment of force system about q.

$\therefore$ $p \times g h$ = moment of force system about q.

First Moment of an Area.—Let a small element of area a of any figure be situated at the point P, Fig. 22, and let X X be any straight line or axis. Then if P N is drawn perpendicular to X X, $a \times$ P N is the first moment of the element of area about the given line. Now, if the whole figure is divided up into elements of area such as a, and the moments of each element be

Digitized by Google

taken about x x and the whole of these moments be added together, the resulting sum is called the *first moment of the area.*

∴ The first moment of the whole area is the sum of quantities such as $a \times P N$. This is expressed symbolically as follows:

First moment of whole area $= \Sigma (a \times P N)$.

Now the **centroid** or *the first moment centre* of an area is defined as the point at which the whole area can be considered concentrated, in order that its moment about any given line will be equal to the first moment of the area about the same line.

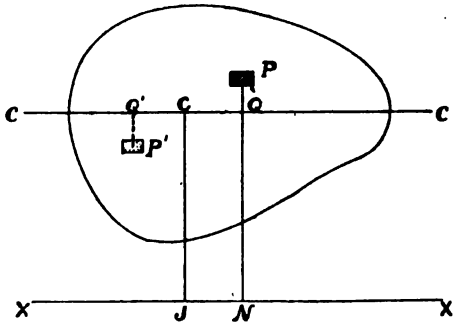

Fig. 23.

Thus if c is the centroid of the area, and c J is drawn perpendicular to x x, and the area of the whole figure is A, we have:

$$A \times c J = \Sigma (a \cdot P N)$$

$$\therefore c J = \frac{\Sigma a \cdot P N}{A}$$

This will not determine the exact position of c, but only its distance from the given line x x. If the exact position of the centroid is required we must also take moments about some other line, not parallel to x x, then the distance from the two lines will determine its position.

In connection with the centroid it should be noted that the position of the centroid depends solely on the shape of the figure, and not on the position of the axes about which moments are

Digitized by Google

taken. As in the case of forces, we have positive and negative moments in areas, the moment being positive when the given element of area is above or to the right of the given axis, and negative when it is below or to the left.

FIRST MOMENT ABOUT LINE THROUGH CENTROID.— Now consider the first moment of an area about a line C C, Fig. 23, through the centroid. The moments of elements of area above the line such as that at P will be positive, and the moments of elements of area below the line such as that at P^1 will be negative.

Now in this case C J is zero, and therefore A × C J will also

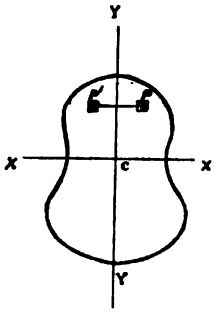

Fig. 24.

be zero, and therefore we have the rule that the first moment of any area about a line through its centroid is zero.

POSITION OF CENTROID WITH AXES OF SYMMETRY.—Suppose an area has an axis of symmetry Y Y, Fig. 24. Then this line divides the area into two exactly similar halves so that corresponding to each element of area at P having a positive moment about Y Y we have an equal element at P^1 having an equal negative moment about Y Y so that the total moment of the area about Y Y is zero, or Y Y passes through the centroid.

If the figure has another axis of symmetry X X, the centroid also lies on this line, or we have the rule that the centroid of a figure is at the intersection of two axes of symmetry.

For the determination of the position of the centroid for various cases, see page 81.

Digitized by Google

It should be noted that the centroid of an area is the same as the centre of gravity of a template of the same shape as the area.

Second Moments or Moments of Inertia. — The product of a $\left\{\begin{matrix}\text{force } (f)\\ \text{mass } (m)\\ \text{area } (a)\\ \text{volume } (v)\end{matrix}\right\}$ by the *square* of its distance r from a given point or axis is called the *second moment* of the $\left\{\begin{matrix}\text{force}\\ \text{mass}\\ \text{area}\\ \text{volume}\end{matrix}\right\}$ about the given line or axis.

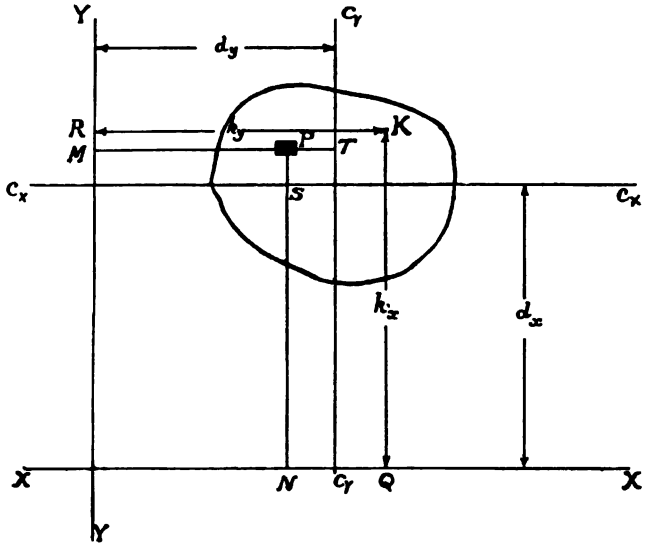

Fig. 25.—Second Moment or Moment of Inertia of an Area.

Now, in considering rotating bodies the second moment of the mass has to be considered, and this quantity has been given the name of the *moment of inertia.* In the application of the second moment to structural work we shall have nothing to do with inertia, but the term *moment of inertia* has been generally adopted, and so we shall use it; but we must remember that it is really a borrowed term and quite an unsuitable one.

Application to Areas.—If an element of area a is situated at the point P, Fig. 25, and P N is drawn perpendicular to a line

Digitized by Google

X X, then the second moment of this element of area about the line X X is equal to $a \times P N^2$. If, as in the case of the first moment, we divide the whole area up into elements and take the second moment of each, we see that the second moment of the whole area about X X is the sum of the second moments of the elements. The letter I is always used to devote the second moment, the line X X, about which the moments are taken, being indicated by writing it I_{XX}.

Thus we see $I_{XX} = \Sigma (a \times P N^2)$.

In the same way, considering the line Y Y, we have :

$$I_{YY} = \Sigma (a \times P M^2).$$

Now suppose K is such a point that the whole area can be considered concentrated there so as to give the same second moments about X X and Y Y as the second moment of the area about these lines.

Then $A \times K Q^2 = I_{XX}$

and $A \times K R^2 = I_{YY}$.

Then the point K by analogy might be called the **secondroid** of the area with regard to the axes X X and Y Y. The point of importance with regard to the secondroid is that its position depends on the position of the lines about which the moments are taken, whereas the position of the centroid does not.

Now, the distances of the secondroid from the lines X X and Y Y are called the *second moment radii* or *radii of gyration* about the given lines, and are written k_x and k_y respectively.

∴ We have—

$$A k_x^2 = I_{XX} = \Sigma (a \times P N^2)$$

$$\text{or } k_x = \sqrt{\frac{I_{XX}}{A}}$$

$$A k_y^2 = I_{YY} = \Sigma (a \times P M^2)$$

$$\text{or } k_y = \sqrt{\frac{I_{YY}}{A}}$$

Now, in practice it is nearly always the second moment about

Digitized by Google

a line through the centroid that is required, and this is obtained as follows:

GIVEN THE SECOND MOMENT OR MOMENT OF INERTIA OF AN AREA ABOUT A GIVEN LINE, TO FIND IT ABOUT A PARALLEL LINE THROUGH THE CENTROID.

Suppose we know $I_{X\,X}$.

$$\begin{aligned}
\text{Now, } I_{XX} &= \Sigma\,(a \times P\,N^2) \\
&= \Sigma\,[a \times (P\,S + S\,N)^2] = \Sigma\,[a \times (P\,S + d_x)^2] \\
&= \Sigma\,[a\,.\,(P\,S^2 + 2\,P\,S\,.\,d_x + d_x^2)] \\
&= \Sigma\,(a\,.\,P\,S^2) + \Sigma\,(a\,.\,2\,P\,S\,.\,d_x) + \Sigma\,(a\,.\,d_x^2)
\end{aligned}$$

Of the terms on the right hand side

$$\Sigma\,(a \times P\,S)^2 = I_{CX} \text{ (which is required).}$$

$$\begin{aligned}
\Sigma\,(a\,.\,2\,P\,S\,.\,d_x) &= 2\,d_x\,\Sigma\,a\,.\,P\,S \\
&= 2\,d_x \text{ (first moment of area about line } C_X\,C_X \text{ through centroid)} \\
&= 2\,d_x \times 0 \\
&= 0 \\
\Sigma\,(a\,.\,d_x^2) &= d_x^2\,\Sigma\,a \\
&= d_x^2 \text{ (area of whole figure)} \\
&= d_x^2\,.\,A.
\end{aligned}$$

$$\begin{aligned}
\therefore \text{ We have } I_{XX} &= I_{CX} + A\,d_x^2 \\
\text{or } I_{CX} &= I_{XX} - A\,d_x^2 \\
\text{Similarly } I_{CY} &= I_{YY} - A\,d_y^2.
\end{aligned}$$

*** The Momental Ellipse or Ellipse of Inertia.**—The *principal axes* of a section are defined as two axes at right angles through the centroid, such that the sum of quantities such as $a \times P\,M$, $P\,N$, or the *product moment* as it is called, is equal to zero.

In the case of sections with an axis of symmetry, such axis determines one of the principal axes.

Let X X and Y Y, Fig. 26, be the principal axes of a section and let k_x and k_y be the radii of gyration about the two axes. With O as centre draw an ellipse, O X being equal to k_y and O Y being equal to k_x. Then this ellipse is called the *momental ellipse* or *ellipse of inertia.*

Digitized by Google

To obtain the radius of gyration k_z about a line Z Z passing through O at an angle θ to X X, draw $z\ z$ a tangent to the ellipse parallel to Z Z, and draw O Q perpendicular to it.

Then $\text{O Q} = k_z$

for
$$\begin{aligned} I_{ZZ} &= \Sigma\, a \,.\, \text{P R}^2 \\ &= \Sigma\, a\, (\text{P S} - \text{S R})^2 \\ &= \Sigma\, a\, (\text{P S} - \text{N T})^2 \\ &= \Sigma\, a\, (y \cos\theta - x \sin\theta)^2 \\ &= \Sigma\, a \,.\, x^2 \sin^2\theta + \Sigma\, a\, y^2 \cos^2\theta - \Sigma\, 2\, xy \sin\theta \cos\theta \\ &= \sin^2\theta\, \Sigma\, a \,.\, x^2 + \cos^2\theta\, \Sigma\, a\, y^2 - 2 \sin\theta \cos\theta\, \Sigma\, xy \end{aligned}$$

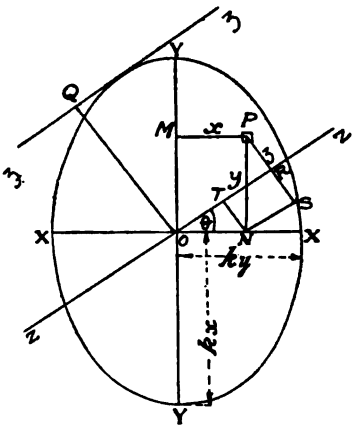

Fig. 26.—Momental Ellipse or Ellipse of Inertia.

Now, $\Sigma\, xy$ is the product moment, and as X X and Y Y are the principal axes, this is zero.

$$\begin{aligned} \therefore\ I_{ZZ} &= \sin^2\theta\, \Sigma\, (a \,.\, x^2) + \cos^2\theta\, \Sigma\, (a\, y^2) \\ &= I_{XX} \sin^2\theta + I_{YY} \cos^2\theta \end{aligned}$$

$$\begin{aligned} \therefore\ A\, k_z^2 &= A\, k_x^2 \sin^2\theta + A\, k_y^2 \cos^2\theta \\ k_z^2 &= k_x^2 \sin^2\theta + k_y^2 \cos^2\theta \end{aligned}$$

and therefore from the properties of the ellipse O Q is equal to k_z.

Digitized by Google

To find the principal axes in the case where there is no axis of symmetry, the procedure is as follows:

(*a*) By graphical methods or by calculation first find the value of the product moment and the radii of gyration about any two axes through the centroid at right angles.

Let the product moment be $A p^2$ and the radii of gyration k_x and k_y.

Then the angle of inclination θ of the principal axes to k_x or k_y are given by the relation

$$\tan 2\theta = \frac{2p^2}{k_x^2 - k_y^2}$$

(*b*) By graphical methods or by calculation find the second moments of the given figure about lines X X and Y Y at right angles to each other and passing through the centroid and find it also about a third line Z Z at 45 degrees to the other two.

Then if θ is the inclination of the principal axes to X X and Y Y

$$\tan 2\theta = \frac{I_X + I_Y - 2I_Z}{I_X - I_Y}$$

$$\text{or } \tan 2\theta = \frac{k_x^2 + k_y^2 - 2k_z^2}{k_x^2 - k_y^2}$$

CONDITION THAT PRODUCT MOMENT IS ZERO.—It can be shown that the condition that the product moment about two lines is zero is that such lines form conjugate diameters of the momental ellipse.

A numerical example on the momental ellipse, will be found on page 165.

Second Moments about any Two Lines through the Centroid at Right Angles.—A property of the second moments of a figure that is sometimes useful is that the sum of the second moments of an area, about two lines at right angles through the centroid, is equal to the sum of the second moments about any other pair of lines at right angles through the centroid.

Second Moment or Moment of Inertia of Figure about an Axis perpendicular to its Plane.—The second moment or moment of inertia of an area about an axis O perpen-

Digitized by Google

dicular to its plane is called the *polar second moment or moment of inertia,* and is equal to $\Sigma a \cdot PO^2$.

Let any two axes X X and Y Y at right angles be drawn through O, and let perpendiculars P N, P M be drawn to these axes, Fig. 27. Then

$$PO^2 = PN^2 + NO^2$$
$$= PN^2 + PM^2$$
$$\therefore \Sigma a \cdot PO^2 = \Sigma a \cdot PN^2 + \Sigma a \cdot PM^2$$
$$= I_{XX} + I_{YY}$$

Therefore we have the following rule :

The polar second moment, or moment of inertia, about an axis perpendicular to the plane of any area, is equal to the sums of the

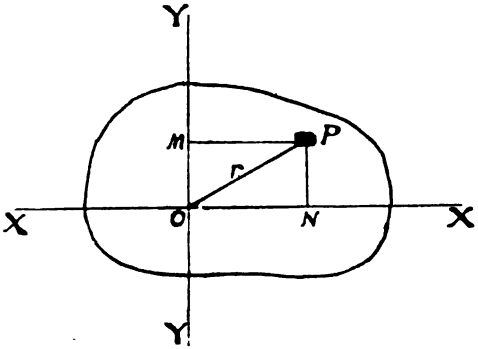

Fig. 27.—Polar Moment of Inertia.

second moments about any two lines at right angles, drawn through the axis in the plane of the area.

The Determination of Centroids, Moments of Inertia, and Radii of Gyration.—(*a*) MATHEMATICAL.—Consider the curve of a function $y = F x$.

Then considering a strip of width dx parallel to the axis of x, Fig. 28.

$$\text{Area of curve} = \int F(x)\, dx$$

$$\text{First moment of area about O Y} = \int F(x)\, dx \times x$$

$$\text{Second moment of area about O Y} = \int F(x)\, dx \times x^2$$

Digitized by Google

Consider for example the parabola $y^2 = 4ax$, and take the area between the curve and the axis of x.

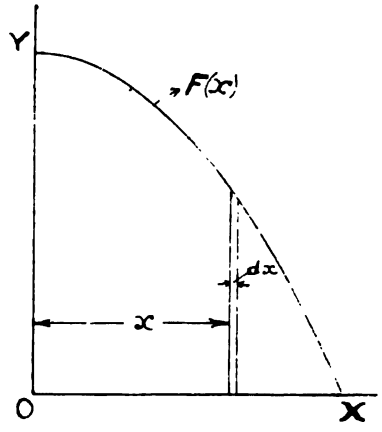

Fig. 28.

$$\text{Area of curve} = \int y\,dx = \int 2a^{\frac{1}{2}} x^{\frac{1}{2}}\,dx$$

$$= 2a\int_0^B x^{\frac{1}{2}}\,dx = \left[2a^{\frac{1}{2}} \cdot \frac{2}{3}x^{\frac{3}{2}}\right]_0^B$$

$$= \frac{4}{3}a^{\frac{1}{2}}B^{\frac{3}{2}}$$

Now $2a^{\frac{1}{2}}B^{\frac{1}{2}} = H$

$\therefore$ Area of curve $= \frac{2}{3}BH$, Fig. 29.

$$\text{First moment about O Y} = \int xy\,dx = \int 2a^{\frac{1}{2}}x^{\frac{3}{2}}\,dx$$

$$= 2a\int_0^B x^{\frac{3}{2}}\,dx = \left[2a^{\frac{1}{2}} \cdot \frac{2}{5}x^{\frac{5}{2}}\right]_0^B$$

$$= \frac{4}{5}a^{\frac{1}{2}}B^{\frac{5}{2}} = \frac{2}{5}B^2H$$

$$\therefore \text{distance of centroid from O Y} = \frac{\frac{2}{5}B^2H}{\frac{2}{3}BH} = \frac{3}{5}B$$

Digitized by Google

Second moment about O Y $= \int x^2 y\, dx = \int 2\, a^{\frac{1}{2}}\, x^{\frac{1}{2}}\, dx$

$$= 2\, a \int_0^B x^{\frac{1}{2}}\, dx = \left[2\, a^{\frac{1}{2}} \cdot \frac{2}{7}\, x^{\frac{7}{2}} \right]_0^B$$

$$= \frac{4}{7}\, a^{\frac{1}{2}}\, B^{\frac{7}{2}} = \frac{2}{7}\, B^3\, H$$

$$\therefore\ k_Y^2 = \frac{\frac{2}{7}\, B^3\, H}{\frac{2}{3}\, B\, H},$$

$$\text{or } k_Y = \sqrt{\tfrac{3}{7}}\, B.$$

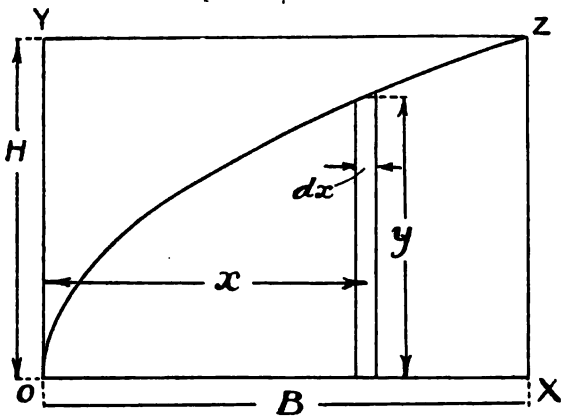

Fig. 29.

If the second movement is required about the base x z, we proceed as follows:

$$I_{OY} = \frac{2}{7}\, B^3\, H.$$

$$I_{CC} = I_{OY} - A \cdot d^2$$

$$= \frac{2}{7}\, H\, B^3 - \frac{2}{3} \cdot B\, H \cdot \frac{9\, B^2}{25}$$

$$I_{XX} = I_{CC} + A\, d_1^2$$

$$= \frac{2}{7}\, H\, B^3 - \frac{6}{25}\, H\, B^3 + \frac{8}{75} \cdot H\, B^3$$

$$= H\, B^3 \left\{ \frac{150 - 126 + 56}{525} \right\} = H\, B^3 \cdot \frac{80}{525}$$

$$= \frac{16}{105}\, H\, B^3.$$

Digitized by Google

A list of values of second moments, &c., for common figures will be found on page 81.

It often happens in practice that the mathematical method is unworkable, in which case the following graphical methods are necessary.

(*b*) GRAPHICAL.—(1) *Centroid.*—Suppose we have any area P R Q S, Fig. 30, and any two parallel lines X X and Y Y, at distance *h* apart.

Draw a thin strip of the area parallel to X X and of thickness *t*

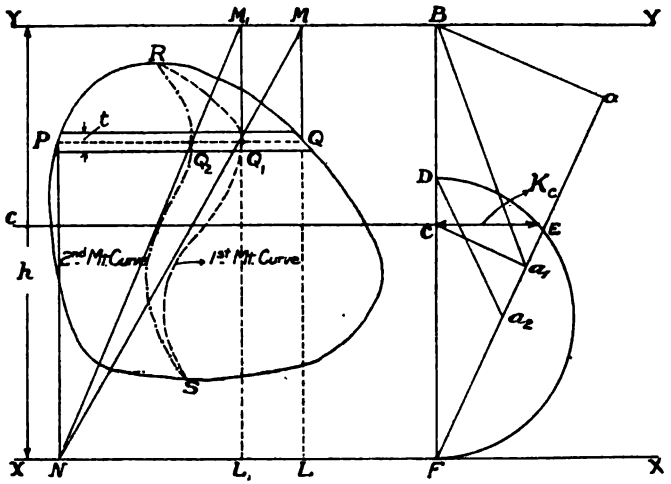

Fig. 30.—Graphical Determination of Centroid and Moment of Inertia, &c.

and let its centre line be P Q. From one of the ends of this centre line, say Q, draw a perpendicular Q M to Y Y and from the other end draw P N perpendicular to X X.

Join M N and let it cut P Q in Q_1 and produce M Q to cut X X in L.

Then the $\triangle$s P N Q_1, M N L are similar.

$$\therefore \frac{PQ_1}{PN} = \frac{NL}{ML} = \frac{PQ}{h}$$

$$\therefore PQ_1 = \frac{PQ \cdot PN}{h}$$

Digitized by Google

Multiplying through by t we have:

$$P Q_1 \times t = \frac{P Q \times t \times P N}{h} = \frac{\text{area of strip } P Q \times P N}{h}$$

$$\therefore \text{Area of portion } P Q_1 \text{ of strip} = \frac{\text{First moment of strip about } X X}{h} \quad (1)$$

Now divide the whole area up into strips and join up all the points corresponding to Q_1, thus obtaining the *First Moment Curve* R Q_1 S.

Then the area to the left-hand side of the first moment curve will be the sum of the areas of portions of strips such as $P Q_1$. Call this the *First Moment Area* (A_1). Then we have:

$$A_1 = \frac{\text{Sum of first moments of strips about } X X}{h}$$

$$= \frac{\text{First moment of whole area}}{h}$$

$$\therefore \text{First moment of whole area} = A_1 h$$

$$\text{or distance of centroid from } X X = \frac{\text{First moment about } X X}{\text{area of figure}}$$

$$= \frac{A_1 h}{A} \quad \ldots\ldots\ldots\ldots\ldots\ldots\ldots\ldots (2)$$

Draw any vertical line F B to cut X X in F and Y Y in B and through F draw any inclined line, on which set out F a equal on some scale to A, and F a_1 equal to A_1. Join a B and draw a_1 C parallel to it, then the centroid lies on a line through C parallel to X X or Y Y.

$$\text{For } \frac{C F}{F B} = \frac{F a_1}{F a}$$

$$\therefore \frac{C F}{h} = \frac{A_1}{A}$$

$$\text{or } C F = \frac{A_1 h}{A}$$

And this by relation (1) above gives the distance of the centroid from X X.

(2) *Second Moment.*—If the second moment is required about the line X X draw $Q_1 M_1$ perpendicular to Y Y and join M_1 N, cutting P Q in Q_2 and let $M_1 Q_1$ produced cut X X in L_1.

Digitized by Google

Then the Δs $P N Q_2$, $M_1 N L_1$ are similar.

$$\therefore \frac{P Q_2}{P N} = \frac{N L_1}{M_1 L_1} = \frac{P Q_1}{h}$$

$$\therefore P Q_2 = \frac{P Q_1 \times P N}{h}$$

Multiply through by t, then we have

$$P Q_2 \times t = \frac{P Q_1 \times t \times P N}{h}$$

But we have seen that $P Q_1 \times t = \frac{\text{area of strip } P Q \times P N}{h}$

$$\therefore P Q_2 \times t = \frac{\text{area of strip } P Q \times P N^2}{h^2}$$

$$\therefore \text{Area of portion } P Q_2 \text{ of strip} = \frac{\text{second moment of strip } P Q \text{ about } X N}{h^2} \quad \ldots(3)$$

Now repeat this construction for each of the strips and join up all the points corresponding to Q_2, thus obtaining the *second moment curve* $R Q_2 S$.

Then the area to the left-hand side of the second moment curve will be the sum of the areas of portions of strips such as $P Q_2$. Call this the *second moment area* (A_2). Then we have:

$$A_2 = \frac{\text{Sum of second moments of strips about } X X}{h^2}$$

$$= \frac{I_{X X}}{h^2}$$

$$\therefore I_{X X} = A_2 h^2 \quad \ldots\ldots\ldots\ldots\ldots\ldots\ldots\ldots\ldots\ldots (4)$$

Some care is required in determining which area to read as A_1 or A_2. It does not matter whether the verticals are drawn downward from P or from Q, but when the moments are required about one of the lines, say X X, read, for the first moment area, the area on that side of the first moment curve from which the perpendiculars are drawn to X X, and in drawing the second moment curve draw from the first moment points, such as Q_1, perpendiculars to the other line Y Y, again reading the area to the side from which the perpendiculars were drawn to X X.

Digitized by Google

Now, on the line Fa set out Fa_2 equal to A_2 on the same scale to which the other areas were drawn, and join a_1 B, drawing a_2 D parallel to it.

On D E describe a semicircle, and draw a line C E parallel to it to meet it in E.

Then C E will be equal to k_c, the radius of gyration about C C.

PROOF.

$$\frac{FD}{FB} = \frac{E\,a_2}{E\,a_1} = \frac{A_2}{A_1}$$

$$\therefore FD = \frac{h \times A_2}{A_1} = \frac{\frac{h \times I_{XX}}{h^2}}{\frac{A \times CF}{h}} = \frac{I_{XX}}{A.CF} = \frac{k_x^2}{CF}$$

Now $$\frac{FD}{FE} = \frac{FE}{FC}$$

$$\therefore FD.FC = FE^2$$

$$\therefore FD = \frac{FE^2}{CF}$$

$$\therefore FE = k_x$$

Now $$FE^2 = FC^2 + CE^2$$

$$\therefore k_x^2 = CE^2 + d_x^2$$

$$\therefore CE^2 = k_x^2 - d_x^2$$

But we have already shown that

$$k_c^2 = k_x^2 - d_x^2$$

$$\therefore CE = k_c.$$

NUMERICAL EXAMPLE.—*Graphical Determination of Radius of Gyration of Rail Section about Centroid.*

Fig. 31 shows the graphical determination of the radius of gyration about the centroid parallel to the base of a British Standard 85 lb. flat rail section.

Since the section is symmetrical about a vertical centre line, the first and second moment curves need be drawn only for half the section, this simplifying the construction considerably. The lines X X and Y Y are taken as the horizontal lines, touching the section at top and bottom.

Digitized by Google

The areas A, A_1, A_2 are next found by planimeter or by sum-curve construction. (To avoid complication of figures, the sum curves for the first and second moment curves are omitted.) The first and second moment areas are to the left of the curves.

When multiplied by two, because only half the section was considered, we get :—

$A = 8{\cdot}36$ sq. in. $\quad A_1 = 4{\cdot}02$ sq. in. $\quad A_2 = 3{\cdot}05$ sq. in.

To the side of the figure a vertical F B is drawn between the X X and Y Y lines, and the points a, a_1, a_2 obtained as shown.

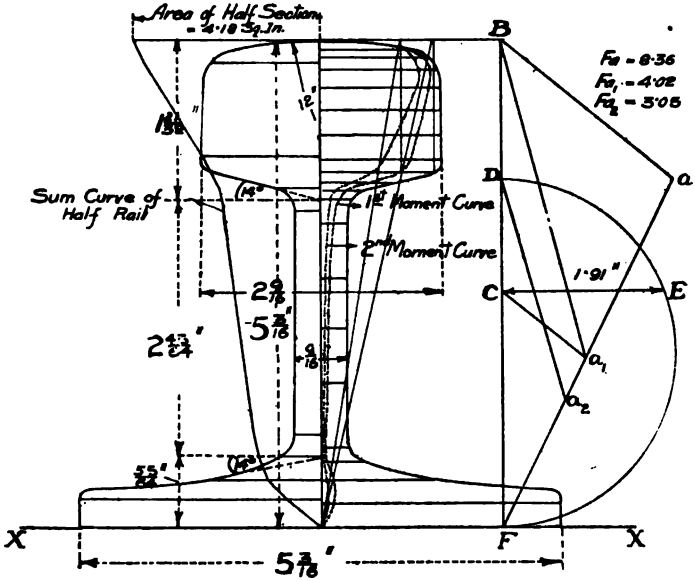

Fig. 31.—*Rail Section.*

Then by joining a B and drawing a_1 C parallel, we get the point C, C F giving the distance of the centroid from X X ; and by joining a_1 B and drawing a_2 D parallel, we get the point D.

On D F a semi-circle is drawn, and C E is drawn horizontal to meet the semi-circle in E.

Then C E = k_c which on measuring will be found to be 1·91 in.

This construction should be gone through as an exercise.

Digitized by Google

APPLICATION OF ABOVE METHOD TO CASE OF RECTANGLE.—Let A B C D, Fig. 32, be a rectangle of base b and height h, and take the lines X X and Y Y through C D and B A respectively. Then the first moment curve will be the diagonal B E D, while the second moment curve will come a parabola B F D, so that:—

$$A_1 = \frac{b\,h}{2}$$

$$A_2 = \frac{b\,h}{3}$$

$$\therefore I_{XX} = \frac{b\,h}{3} \times h^2 = \underline{\frac{b\,h^3}{3}}$$

$$d_x = \frac{A \times h}{A_1} = \frac{b\,h \times h}{\frac{b\,h}{2}} = \frac{h}{2}$$

$$\therefore I_{CC} = I_{XX} - A\,d_x^2$$

$$= \frac{b\,h^3}{3} - \frac{b\,h.h^2}{4} = \underline{\frac{b\,h^3}{12}}$$

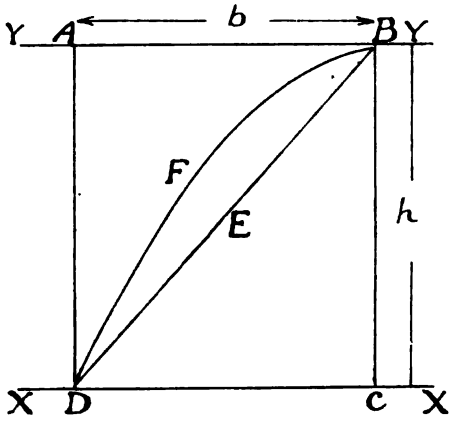

Fig. 32.—Moment of Inertia of Rectangle.

ALTERNATIVE GRAPHICAL CONSTRUCTION—MOHR'S METHOD.—The following graphical method for obtaining the second moment about the centroid is in some cases more convenient in

Digitized by Google

use than the one previously given. Divide the area, Fig. 33, up into a number of small strips, not necessarily equal, parallel to the direction about which moments are taken, and draw the centre line of each of said strips. Then if the strips are sufficiently small (we have only taken a few strips in the figure to avoid complication) the lengths of these centre lines represent the areas of the separate strips. Now, on a vector line, to some scale, set out 0, 1, 1, 2,...6, 7 to represent the area of each strip, and take a pole P

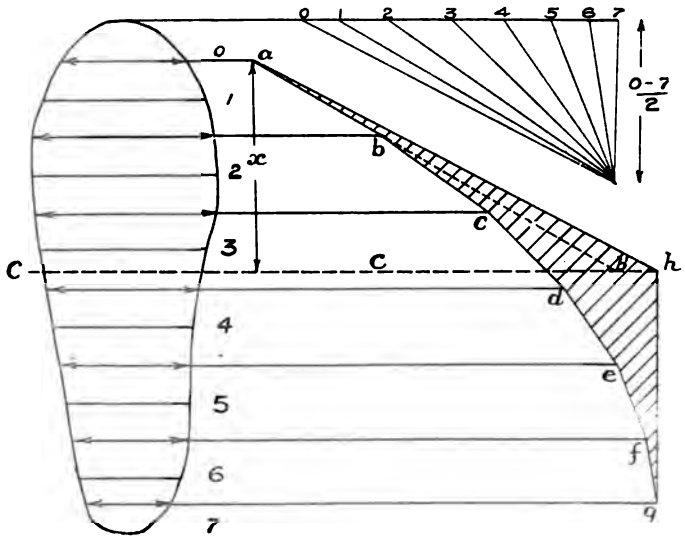

Fig. 33.—Mohr's Construction for Moment of Inertia.

at distance = ½ total area 0, 7 from this vector line. Then anywhere across space 0 draw and produce a line *a h* parallel to 0, P; across space 1 draw *a b* parallel to P 1; across space 2, *b c* parallel to P 2, and so on until the point *g* is reached. Then draw the last link *g h* parallel to the last line P 7 to meet *a h* in *h*.

Then the line C C through the centroid passes through *h*, and if α is the area of the shaded area, and A is the area of the figure,

$$I_{cc} \text{ of figure} = A \times \alpha.$$

PROOF.—Consider one of the elemental areas, say 0, 1, and

Digitized by Google

produce $a\,b$ to meet the horizontal through h in b^1. Then, by the law of the link and vector polygon construction, treating the areas of the elements as forces (proved on page 61).

$$b'h = \text{moment of first force about c c} \times \frac{1}{\text{polar distance}}$$

$$= 0,1 \times x \times \frac{1}{\frac{1}{2}\text{ total area}}$$

$$= 0,1 \times x \times \frac{2}{A}$$

$$\text{Area of } \Delta\, a\, b'\, h = \tfrac{1}{2}\, b^1 h \times x$$

$$= \frac{0,1 \times x^2 \times 2}{A}$$

$$= \frac{\text{second moment of element about c c}}{A}$$

$$\therefore \text{ Area of shaded figure} = a = \frac{\text{second moment of figure about c c}}{A}$$

i.e., $A\,a$ = second moment of figure about c c.

The proof that h determines the centroid will be found on page 54, where it is proved the meet of the first and last links determines the resultant, and in this case the centroid is where the resultant of the separate areas considered as forces act.

***Equivalent Centroid and Second Moment of Heterogeneous Sections.**—Suppose that the cross-section of a beam is composed of two materials for which Young's modulus is not the same, and let Young's modulus for one material B be e times Young's modulus for the second material C. Then in the case of direct stress we have seen that the material B behaves as if it were replaced by e times its area of the material C. In the case of a beam the same relation holds, so that we may replace the material B by an area e times as wide, the width being taken parallel to the line about which moments are taken.

Then if A_1 is the area of material B, and A that of material C, the equivalent area of homogeneous material C is given by

$$A_2 = A_1 + e\,A$$

To obtain the distance d of the equivalent centroid from a line x x, take first moments of the separate areas about x x and let them be M and M_1 respectively.

Digitized by Google

Then equivalent first moment of the second material is :

$$M_2 = M_1 + e\,M$$

$$\therefore\ d = \frac{M_1 + e\,M}{A_1 + e\,A}$$

To obtain the equivalent second moment about a line x x, take the separate second moments about x x and let them be I and I_1 respectively, then the equivalent second moment of the second material is given by $I_2 = I_1 + e\,I$

We shall give numerical examples and further explanation of this when dealing with flitched beams and reinforced beams.

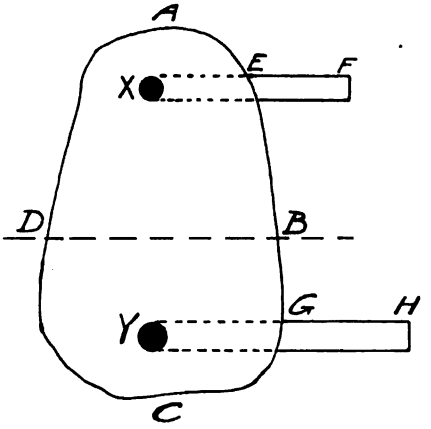

Fig. 34.

The above reasoning may be shown graphically as follows :

Let A B C D (Fig. 34) represent any area which has embedded in it two bars X and Y of different material. For considering the moments about any line such as D B shown dotted, make a strip E F of the same depth as X, and of area equal to $(e - 1)$ area of X and also a strip O H of area equal to $(e - 1)$ area of Y.

Then the equivalent first and second moments of the heterogeneous section about the given line will be the same as a homogeneous section of form A E F B G H C D.

We take E F = $(e - 1)$ area of X because the bar already occupies an area equal to its area, so that equivalent area of second material = $[(e - 1) + 1]$ area of X = $e \times$ area of X.

Digitized by Google

Area, Position of Centroid, and Moment of Inertia of Common Figures.

(*See* Fig. 35.)

No.	Figure	Area	Position of Centroid		Moment of Inertia			
			From X X	From Y Y	I_{xx}	I_{yy}	I_{uu}	I_{zz}
1	Rectangle	$b\,h$	$\frac{h}{2}$	$\frac{b}{2}$	$\frac{b\,h^3}{3}$	$\frac{h\,b^3}{3}$	$\frac{b\,h^3}{12}$	$\frac{h\,b^3}{12}$
2	Parallelogram	$b\,h$	$\frac{h}{2}$	—	$\frac{b\,h^3}{3}$	—	$\frac{b\,h^3}{12}$	—
3	Triangle	$\frac{b\,h}{2}$	$\frac{h}{3}$	$\frac{b}{2}$	$\frac{b\,h^3}{12}$	$\frac{7\,h\,b^3}{48}$	$\frac{b\,h^3}{36}$	$\frac{h\,b^3}{48}$
4	Trapezium (where $a = n\,b$)	$\frac{h\,b}{2}\left(1+n\right)$	$\frac{h}{3}\left(\frac{2\,n+1}{n+1}\right)$	—	$\frac{b\,h^3}{12}\left(3\,n+1\right)$	—	$\frac{b\,h^3}{36}\,\frac{(n^2+4\,n+1)}{(n+1)}$	$\frac{b\,h^3}{12}\left(n+3\right)$
5	Square	b^2	—	—	—	—	$\frac{b^4}{12}$	$\frac{b^4}{12}$
6	Circle	$\frac{\pi\,d^2}{4}$	$\frac{d}{2}$	—	$\frac{5\,\pi\,d^4}{64}$	—	$\frac{\pi\,d^4}{64}$	—
7	Ellipse	$\frac{\pi\,d_1\,d_2}{4}$	—	—	—	—	$\frac{\pi\,d_2^3\,d_1}{64}$	$\frac{\pi\,d_1^3\,d_2}{64}$
8	Parabolic segment (interior)	$\frac{2}{3}\,b\,h$	$\frac{2}{5}\,h$	$\frac{3}{8}\,b$	$\frac{16}{105}\,b\,h^3$	$\frac{2}{15}\,h\,b^3$	$\frac{8}{175}\,b\,h^3$	—
9	Parabolic segment (exterior)	$\frac{1}{3}\,b\,h$	$\frac{3}{10}\,h$	$\frac{b}{4}$	—	—	—	—

Digitized by Google

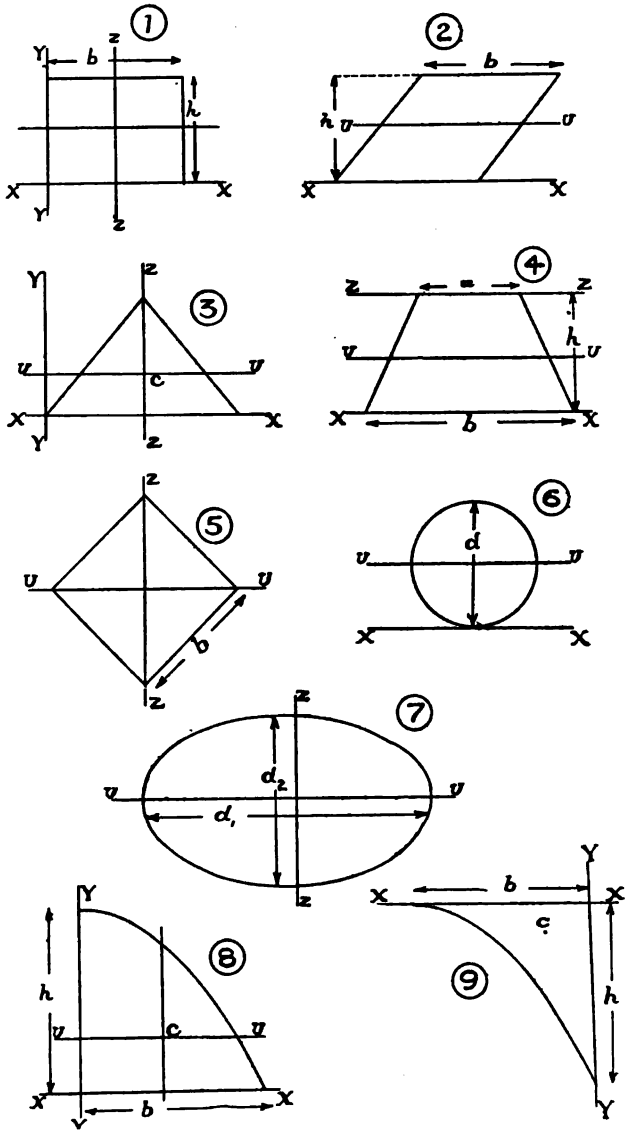

Fig. 35.—Properties of Common Figures.

Digitized by Google

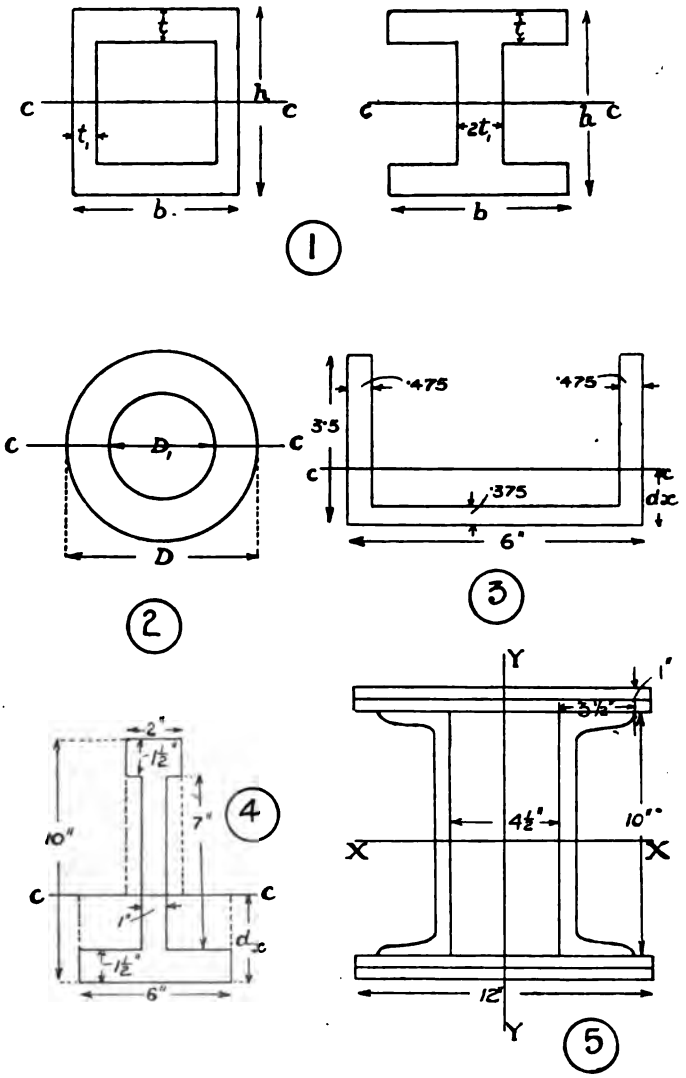

Fig. 36.—Moments of Inertia, &c.

Digitized by Google

For the properties of British Standard Steel Sections, see Appendix.

Calculation of Moment of Inertia and Radii of Gyration of Sections used in Constructional Work.—The moments of inertia of sections composed of sections of known moment of inertia are found by adding up the moments of the separate parts, or subtracting when the area consists of the difference of known areas.

The following examples should make the method of calculation clear for any such case. See Figs. 36 and 37.

(1) **Box or I Section.**—These are geometrically equivalent as far as the line c c is concerned because if the box section be cut in half vertically and the two halves be turned back to back, we get the I section.

$$\text{Then } I_{cc} = \frac{b\,h^3 - (b - 2\,t_1)\,(h - 2\,t)^3}{12}$$

(2) **Hollow Circular Section.**

$$I_{cc} = \frac{\pi}{64}\,(D^4 - D_1^4)$$

When the thickness of metal is small and equal to t, this approximates to $I_{cc} = \dfrac{\pi\,D^3\,t}{32}$

(3) **Channel Section** (neglecting inclination of sides and rounded corners).—Consider the section shown in Fig. 36 (3).

$$\text{Area} = A = 3{\cdot}5 \times {\cdot}475 + 5{\cdot}05 \times {\cdot}375 + 3{\cdot}5 \times 475 = 5{\cdot}219 \text{ sq. in.}$$

To obtain distance d_x of centroid from x x take first moments about x x. Then

$$A \times d_x = 3{\cdot}5 \times {\cdot}475 \times \frac{3{\cdot}5}{2} + \frac{5{\cdot}05 \times {\cdot}375 \times {\cdot}375}{2} + \frac{3{\cdot}5 \times {\cdot}475 \times 3{\cdot}5}{2}$$

$$= 2{\cdot}910 + {\cdot}363 + 2{\cdot}910 = 6{\cdot}183$$

$$\therefore\ d_x = \frac{6{\cdot}183}{5{\cdot}219} = 1{\cdot}185 \text{ in.}$$

Second moment about x x $= I_{xx}$

$$= \frac{{\cdot}475 \times 3{\cdot}5^3}{3} + \frac{5{\cdot}05 \times {\cdot}375^3}{3} + \frac{{\cdot}475 \times 3{\cdot}5^3}{3}$$

$$= 6{\cdot}775 + {\cdot}089 + 6{\cdot}775 = 13{\cdot}639 \text{ in. units.}$$

Digitized by Google

$$\therefore I_{cc} = I_{xx} - A d_x^2$$
$$= 13{\cdot}639 - (5{\cdot}219 \times 1{\cdot}185^2)$$
$$= 13{\cdot}639 - 7{\cdot}323 = \underline{6{\cdot}316 \text{ in. units.}}$$

$$\therefore k_{cc} = \sqrt{\frac{I}{A}} = 1{\cdot}010 \text{ in.}$$

(4) **Cast Iron Beam Section.**

Area $= A = 2 \times 1\tfrac{1}{2} + 7 \times 1 + 6 \times 1\tfrac{1}{2} = 19$ sq. in.

Moments round base

$$A d_x = 3 \times 9{\cdot}25 + 7 \times 5 + 9 \times {\cdot}75$$
$$= 27{\cdot}75 + 35 + 6{\cdot}75 = 69{\cdot}5 \text{ in. units.}$$

$$\therefore d_x = \frac{69{\cdot}5}{19} = 3{\cdot}658 \text{ ins.}$$

$$\therefore I_{cc} = \frac{6 \times 3{\cdot}658^3}{3} - \frac{1 \times 2{\cdot}158^3}{3} + \frac{2 \times 6{\cdot}342^3}{3} - \frac{1 \times 4{\cdot}892^3}{3}$$
$$= \underline{219{\cdot}95 \text{ in. units}}$$

(5) **Built-up Mild Steel Column Section.**—Composed of two 10 × $3\tfrac{1}{2}$ × 28·21 channels and four 12 in. × $\tfrac{1}{2}$ in. plates. Required to find k_x and k_y. From the Table of Standard Sections we obtain the following information concerning the Channel Sections :—

Area of each 8·296 sq. ins.

I about centroid parallel to X X = 117·9 in. units

I „ „ „ Y Y = 8·194 „ „

Distance of centroid from web = ·933 in.

$\therefore$ Total area of section $= (4 \times 12 \times \tfrac{1}{2}) + (2 \times 8{\cdot}296) = 40{\cdot}592$ sq. in.

MOMENT OF INERTIA ABOUT X X.

2 channels, 117·9 each	= 235·8
2 pairs of 12 × ½ in. plates about centroid $= \frac{2 \times 12 \times 1^3}{12}$	= 12·0
A × d^2 for two pairs of plates $= 2 \times 12 \times 5{\cdot}5^2$	= 726·1
Total	= 973·9 in. units

$$\therefore k_x = \sqrt{\frac{973{\cdot}9}{40{\cdot}592}} = 4{\cdot}90 \text{ ins.}$$

Digitized by Google

MOMENT OF INERTIA ABOUT Y Y.

4 plates 12 × ½ about centroid = $\frac{4 \times \frac{1}{2} \times 12^3}{12}$ = 288·0

2 channels about centroid = 2 × 8·194 = 16·4

A × d^2 for each channel = 2 × 8·296 × 3·183^2 = 168·5

Total ... ... = 472·9

$$\therefore k_y = \sqrt{\frac{472 \cdot 9}{40 \cdot 592}} = 3 \cdot 41 \text{ ins.}$$

(6) **Built - up Beam Section** — composed of two 14 in. × 6 in. × 46 lb. **I** beams and four 14 in. × ⅝ in. plates, Fig. 37. Required I_{xx}.

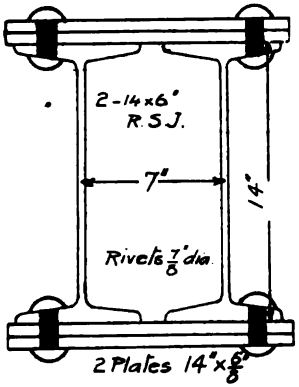

Fig. 37.

From the Standard Section Tables we obtain the following information concerning the **I** beams:—

Area of each = 13·53

I_{xx} „ „ = 440·5

Mean thickness of each flange = ·698 in.

I_{xx} OF WHOLE SECTION (NOT ALLOWING FOR RIVETS).

I_{xx} of two **I** beams = 2 × 440·5 = 881

I of two pairs of plates about centroid = $\frac{2 \times 14}{12} \times \left(\frac{5}{8}\right)^3$ = ·57

A d^2 for two pairs of plates = 4 × 14 × $\frac{5}{8}$ × 7·625^2 = 2035

Total ... ... = 2916·57

Digitized by Google

ALLOWANCE FOR RIVETS (neglect I of each rivet-hole about its centroid).

Area of each hole = $(2 \times \frac{5}{8} + \cdot 698)\frac{7}{8} = 1 \cdot 704$

dist. of centroid from X X = 7·974

$\therefore I_{xx} = 4 \times 1 \cdot 704 \times 7 \cdot 974^2 = 443 \cdot 4$

$\therefore$ Nett $I_{xx} = 2916 \cdot 6 - 443 \cdot 4 = 2473 \cdot 2$

(7) **Built-up Sections—Approximate Method.**— The moment of inertia of built-up sections can be found approximately by adding the moment of inertia of the I beams or channels to A d^2 for the plates, d being taken as the distance from the centre

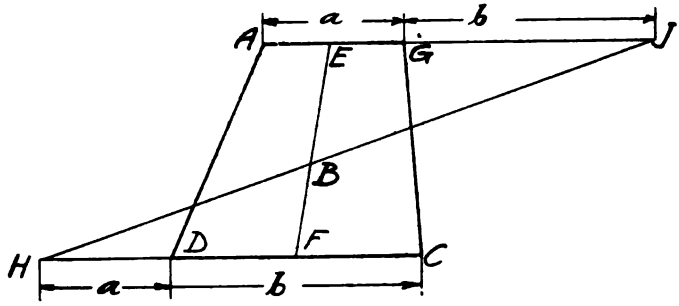

Fig. 38.—*Centroid of Trapezium.*

of one set of plates to X X and the *nett area of the plates* being taken for A.

Taking the section of the previous example, we then get I_{xx} as follows:

I_{xx} of two I beams = $2 \times 440 \cdot 5 = 881$

A d^2 for plates = $4 \times \frac{1}{2}\left(14 - 2 \times \frac{7}{8}\right) \times 7 \cdot 5^2 = 1378$

Total approximate $I_{xx} = 2259$ in. units

Construction for Centroid of Trapezium. — The following graphical construction for obtaining the centroid of a trapezium will be found useful in dealing with masonry structures.

Let A D C G be a trapezium, Fig. 38. Bisect the parallel sides A G and C D in E and F and join E F.

Digitized by Google

Produce A B to J making G J equal to the length b of D C and produce C D to H making D H equal to the length a of H B.

Join H J and let it cut E F in B.

Then B is the required centroid of the trapezium.

Construction for Centroid of any Quadrilateral.—Let E be the point of intersection of the diagonals A C and B D of any quadrilateral, Fig. 39, from D set off C E′ equal to A E and join D E′ and B E′. Then the centroid of the quadrilateral will be the same as that of the triangle B E′ D.

∴ Bisect B E′ and E′ D in K H and join A K and C H, then their point G of intersection gives the required centroid.

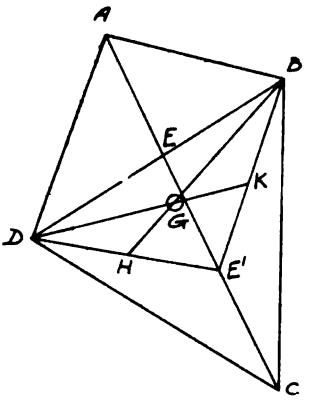

Fig. 39.—*Centroid of Quadrilateral.*

Digitized by Google

CHAPTER IV.

RIVETED JOINTS AND CONNECTIONS.

Forms of Rivet Heads.—The most common forms of rivet heads and their usual proportions are shown in Figs. 40, 41.

For structural work the snap-headed rivets are most usual, but countersunk rivets are used where necessary to prevent pro-

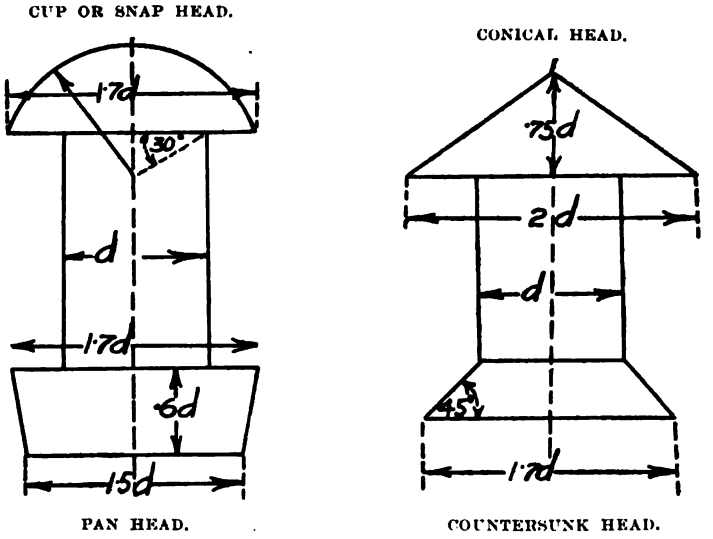

Figs. 40, 41.—*Forms of Rivet Heads.*

jections from the surface of the plate. Snap-heads take a length of rivet equal to about $1\frac{1}{4}$ times the diameter.

It is usual in practice to adopt a diameter of rivet when cold equal to one-sixteenth of an inch less than the diameter of the

Digitized by Google

hole, but in all calculations the diameter of the rivet is taken as being equal to that of the hole.

Diameter of Rivets.—According to Unwin's formula, the diameter of the rivet is $1{\cdot}2\sqrt{t}$ where t is the thickness of the thinnest plate, but for structural work this rule is very seldom adopted. In practice a $\frac{3}{4}''$ or $\frac{7}{8}''$ rivet is adopted wherever possible, and it is best not to use any formula to obtain the diameter in terms of the thickness of the plate. Some authorities use a diameter of $\frac{3}{4}''$ for a $\frac{3}{8}''$ plate, $\frac{7}{8}''$ for a $\frac{1}{2}''$ plate, and $1''$ for a $\frac{5}{8}''$ plate. It is difficult to get rivets of larger diameter than 1 in. driven by hand.

Forms of Joints.—(*a*) Lap Joints and Butt Joints.—In the *lap joint* the plates overlap as shown in Fig. 42. This form of joint has the disadvantage that the line of pull is such as to cause bending stresses, tending to distort the joint as shown.

In the *butt joint* the edges of the plate come flush, and cover plates are placed on each side as shown, the thickness of the cover plates being each five-eighths that of the main plates. In this form of joint the pull is central, so that there are no bending stresses.

In the *single cover joint*, which is a cross between the lap joint and the butt joint, there are bending stresses developed, tending to distort the joint as shown.

It is clear from the above that the butt joint should be adopted wherever possible.

(*b*) Chain Riveting and Zig-zag or Staggered Riveting.—The different rows of rivets in a joint may be arranged in chain form or zig-zag form, as shown in Figs. 43, 44. As we shall see later, the zig-zag form is more economical, and should be used whenever possible.

Methods in which a Riveted Joint may Fail.—A riveted joint may fail in any of the following ways:—

(1) By tearing of the plate.
(2) By shearing of the rivets.
(3) By crushing of the rivets.
(4) By bursting through the edge of the plate.
(5) By shearing of the plate.

Fig. 45 shows these methods of failure.

Digitized by Google

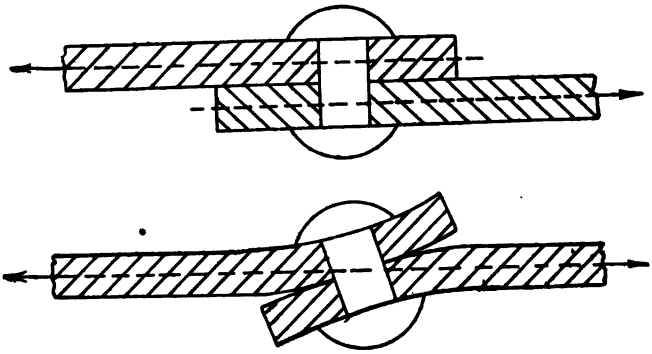

LAP JOINT.

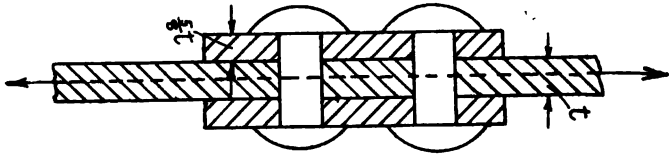

BUTT JOINT.

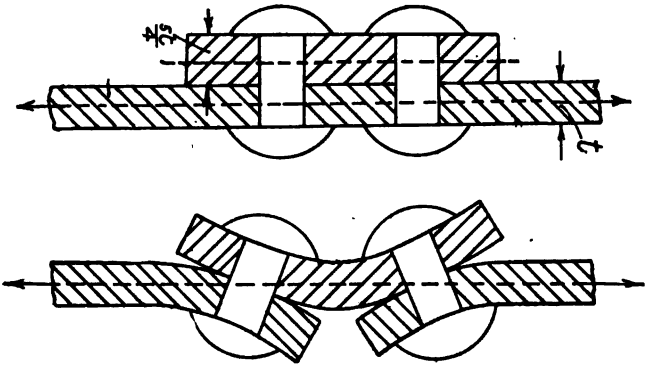

SINGLE COVER JOINT.

Fig. 42.—Forms of Riveted Joints.

Digitized by Google

(4) and (5) are allowed for by the following rule:—The minimum distance between the centre of a rivet and the edge of the plate is $1\frac{1}{2}\,d$, where d is the diameter of the rivet.

If this rule is adhered to the joint will always fail first in one of the ways (1), (2), (3).

The aim in designing a joint should be to make the force necessary to cause failure in the various ways equal.

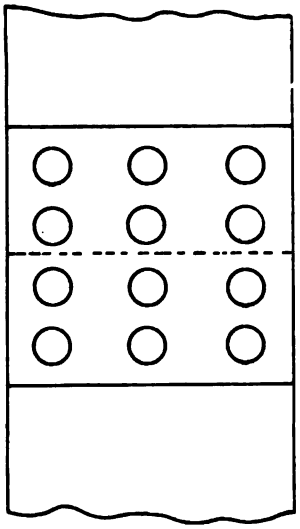

Fig. 43.—Chain Riveting.

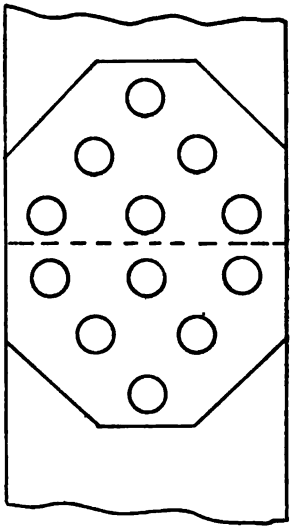

Fig. 44.—Zig-zag Riveting.

We will now consider the various ways of failure in detail, taking in each case a strip of plate equal to the pitch of the rivets.

(1) TEARING OF THE PLATE.—In this case the width along which fracture will occur is $(p-d)$, and as the thickness of the plate is t, the area of fracture $= (p-d)\,t$.

Therefore, if f_t is the *safe* tensile stress in the material, the safe load which the joint can carry is equal to

$$P = f_t\,(p-d)\,t \quad \ldots\ldots\ldots\ldots\ldots\ldots \quad (1)$$

Digitized by Google

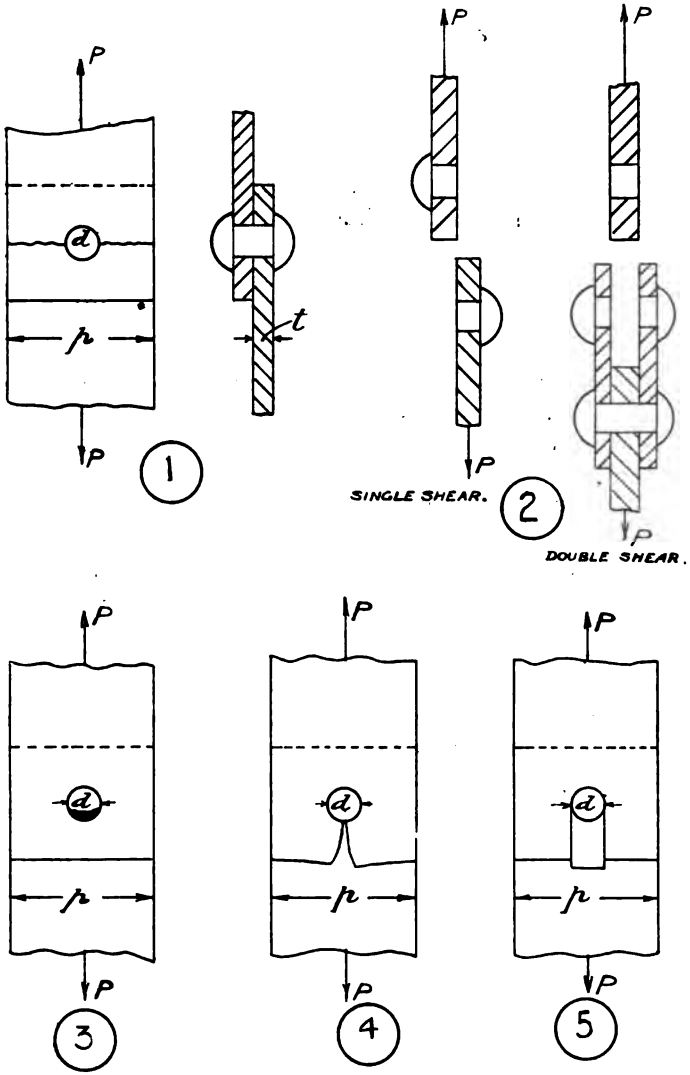

Fig. 45.

Digitized by Google

(2) SHEARING OF THE RIVETS.

In the case of single shear, the area sheared $= \frac{\pi d^2}{4}$

" double " " $= \frac{2 \pi d^2}{4}$ *

Therefore if f_s is the safe shear stress on the rivet, the safe forces on the joint as regards shear are respectively

$$\left.\begin{aligned} P &= f_s \frac{\pi d^2}{4} \\ P &= f_s \frac{2 \pi d^2}{4} \end{aligned}\right\} \quad \ldots\ldots\ldots\ldots\ldots\ldots \quad (2)$$

(3) CRUSHING OR BEARING OF RIVETS.—In this case the crushing or bearing area is taken as the diameter of rivet multiplied by the thickness of the plate, *i.e.*, $d \times t$. Therefore, if f_B is the safe bearing stress on the rivet, the safe force on the joint as regards bearing is equal to

$$P = f_B \cdot d \cdot t \quad \ldots\ldots\ldots\ldots\ldots\ldots \quad (3)$$

The values of f_t and f_s may be taken as given in Chapter II.

For f_B, 10 tons per square inch may be taken for mild steel, and 8 tons per square inch for wrought iron. These figures are higher than for ordinary compression, and are obtained from the results of experiments.

For structural work the strength of the joint as regards bearing will often be less than as regards shear, because the plates are often thin compared with the diameter of the rivet.

Efficiency of Joint.—The efficiency of a joint is the percentage ratio of the least strength of a joint to that of a solid joint, *i.e.*

$$\text{Efficiency} = \eta = \frac{\text{Least strength of joint}}{\text{Strength of solid plate}}$$

NUMERICAL EXAMPLES.—The following numerical examples should make the calculations on riveted joints clear.

(1) *A tie bar in a bridge consists of a flat bar of steel 9 in. wide by* $1\frac{1}{4}$ *in. thick. It is to be spliced by a double butt joint. Determine the*

* A Board of Trade rule states that this should be taken as $1{\cdot}75 \frac{\pi d^2}{4}$, but this rule is not universally adopted for structural work.

Digitized by Google

diameter of the rivets and their number, and give sketches showing the proper pitch and arrangement of the rivets. (B.Sc. Lond. 1906.)

According to Unwin's formula $d = 1{\cdot}2\sqrt{t} = 1{\cdot}34$ inches. This is, however, rather high for practice, and so we will adopt $d = 1$ in.

Assuming that the rivets are arranged in zig-zag fashion, the strength of the joints against tearing through the outside rivet is equal to $7\ (9 - 1)\ .\ 1\frac{1}{4} = 70$ tons.

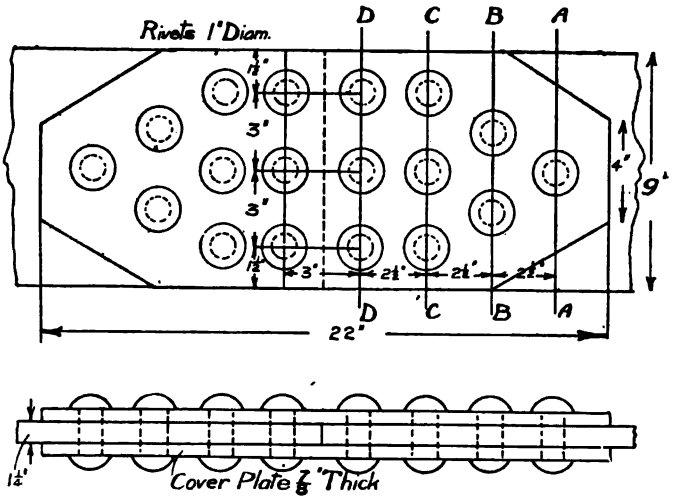

Fig. 46.

Shear strength of each rivet $= 5\ .\ \frac{2\pi}{4}\ .\ (1)^2 = 7{\cdot}85$ tons.

$\therefore$ Number of rivets required for shear $= \frac{70}{7{\cdot}85} = 8{\cdot}93 =$ say 9.

Bearing strength of each rivet $= 10 \times 1 \times 1\frac{1}{4} = 12{\cdot}5$ tons.

$\therefore$ Number of rivets required for bearing $= \frac{70}{12{\cdot}5} =$ say 6.

9 rivets would thus be ample as regards bearing

The joint would then be arranged as shown in Fig. 46, the centre two rows being chain riveted.

We will now consider the strength of this joint under various ways of failure.

If the plate tears along the line B B, the force necessary to reach the safe limit of stress is, as we have shown above, 70 tons.

Digitized by Google

Now suppose that the plate tore along B B, shearing off the rivet in A A.

Then strength of line B B $= 7\ (9 - 2)\frac{5}{4} = 61{\cdot}25$ tons.

Strength of one rivet $= 7{\cdot}85$ tons.

$\therefore$ Total strength against failure along B B $= 61{\cdot}25 + 7{\cdot}85 = 69{\cdot}1$ tons.

Now suppose plate tore along C C, shearing off the three rivets.

Then strength of line C C $= 7\ (9 - 3) \cdot \frac{5}{4} = 52{\cdot}5$ tons.

Strength of three rivets $= 23{\cdot}55$

$\therefore$ Total strength against failure along C C $= 52{\cdot}5 + 23{\cdot}55 = 76{\cdot}05$ tons.

Finally, suppose cover plates tore along D D, then strength

$$= 7\ (9 - 3) \cdot 2 \cdot \frac{7}{8} = 73{\cdot}5 \text{ tons.}$$

From the above we see that the weakest section is along A A.

$$\text{Then efficiency of joint} = \frac{\text{Least strength of joint}}{\text{Strength of solid plate}}$$

$$= \frac{69{\cdot}1}{9 \times 1\frac{1}{4} \times 7} = \frac{69{\cdot}1}{78{\cdot}8} = 87{\cdot}8\ \%$$

If instead of zig-zag riveting we had adopted chain riveting with three rows of three rivets (9 in all) the least strength would be $(9 - 3)\ 1\frac{1}{4} \times 7 = 52{\cdot}5$ tons.

$$\therefore \text{ efficiency of joint} = \frac{52{\cdot}5}{78{\cdot}8} = 66{\cdot}7\ \%$$

If we had four rows of chain riveting with two rivets in each row (8 in all), the least strength would be $(9 - 2)\ 1\frac{1}{4} \times 7 = 61{\cdot}25$ tons.

$$\therefore \text{ efficiency of joint} = \frac{61{\cdot}25}{78{\cdot}8} = 77{\cdot}7\ \%$$

The above shows the zig-zag riveting is considerably more efficient than the chain riveting, and is therefore more economical.

(2) *Design a double-riveted lap joint to connect two steel plates* $\frac{1}{2}$ *in. thick with steel rivets. The tensile strength of the plates before drilling being* 30 *tons per sq. in.; the shearing strength of the rivets* 24 *tons per sq. in.; and the compressive strength of the steel* 43 *tons per sq. in. Find the efficiency of the joint. (A.M.I.C.E. Feb. 1903.)*

For $\frac{1}{2}$ in. plates Unwin's formula would give

$$d = 1{\cdot}2\sqrt{{\cdot}5} = {\cdot}85 \text{ in., say } \tfrac{7}{8} \text{ in.}$$

The joint is a double-riveted lap, therefore there will be two rivets in single shear in a width of plate equal to the pitch.

Digitized by Google

$\therefore$ Strength against tearing per pitch $= f_t\,(p - d)\,t$

$= 30\,(p - d)\,\frac{1}{2} = 15\,(p - d)$...(1)

$\therefore$ Strength against shearing per pitch $= f_s \cdot \frac{2\pi d^2}{4}$

$= \frac{24 \cdot 2\pi}{4} \cdot \left(\frac{7}{8}\right)^2$.....(2)

$= 28{\cdot}9$ tons.

If these are equal $\quad 15\left(p - \frac{7}{8}\right) = 28{\cdot}9$

$\therefore p = \frac{28{\cdot}9}{15} + \frac{7}{8}$

$= 1{\cdot}93 + {\cdot}87 = 2{\cdot}80$ say 3 in.

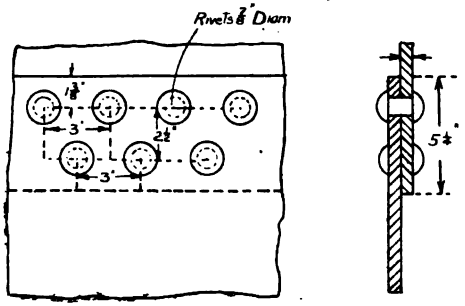

Fig. 47.

The bearing stress for a force of 28·9 tons would be equal to—

$$\frac{28{\cdot}9}{\frac{7}{8} \times \frac{1}{2} \times 2} = 33 \text{ tons per sq. in.}$$

the bearing area of each rivet being $\frac{7}{8} \times \frac{1}{2} = {\cdot}437$ sq. in.

This is less than the allowable value of 43 tons per sq. in., showing that a larger diameter of rivet might be used with greater economy, but $\frac{7}{8}$ in. diameter is in most cases more suitable in practice.

The efficiency of joint in this case is equal to

$$\frac{28{\cdot}9}{30 \times 3 \times \frac{1}{2}} = \frac{28{\cdot}9}{45} = 64{\cdot}2\,\%$$

The joint then comes as shown in Fig. 47.

(3) *A steel-plate tie bar in a bridge is subject to a tension due to dead load only of* 16 *tons. The stress due to live load only varies from* 36 *tons tension to* 10 *tons compression. The tie bar is* $\frac{3}{4}$ *in. thick and is*

Digitized by Google

to be joined to the side plate of a girder by means of a $\frac{3}{4}$ in. gusset plate and double-cover butt joint. Select suitable working stresses and design the joint, arranging the rivets so that the tie bar is weakened by only one rivet section. (B.Sc. Lond. 1907.)

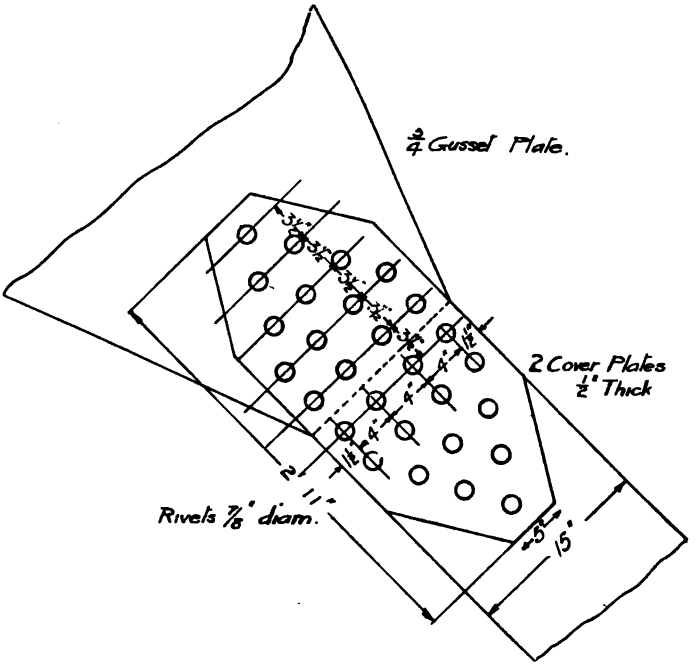

Fig. 48.

The maximum load in this case is 36 + 16 = 52 tons, and the minimum load 16 − 10 = 6 tons.

Using the Launhardt-Weyrauch formula, we have :

$$\text{Working Stress} = \frac{f}{1{\cdot}5}\left(1 + \frac{\text{min. stress}}{2 \text{ max. stress}}\right)$$

$$= \frac{f}{1{\cdot}5}\left(1 + \frac{6}{104}\right) = {\cdot}705f$$

This gives a tensile stress of 4·93 say 5 tons per sq. in. ; a shear stress of 3·52 say 3·5 tons per sq. in. ; and a bearing stress of 7 tons per sq. in.

Digitized by Google

According to Unwin's formula $d = 1{\cdot}2\sqrt{{\cdot}75} = 1{\cdot}04$ in., but for practical reasons $\frac{7}{8}$ in. would usually be adopted.

We now require to find the necessary width of the tie bar. Le this be w.

Then $\left(w - \frac{7}{8}\right)\frac{3}{4}$ is the equivalent cross-sectional area.

$$\therefore \left(w - \frac{7}{8}\right) \cdot \frac{3}{4} \cdot 5 \text{ must be equal to the maximum pull of 52 tons.}$$

$$\therefore \left(w - \frac{7}{8}\right) = \frac{52}{3} \times \frac{4}{5} = 13{\cdot}89$$

$$\therefore w = 13{\cdot}89 + {\cdot}875 = \text{say } 15 \text{ inches.}$$

The strength of each rivet in double shear is equal to

$$\frac{2\pi}{4} \cdot \left(\frac{7}{8}\right)^2 \cdot 3{\cdot}5 = 4{\cdot}22 \text{ tons.}$$

$$\therefore \text{No of rivets required for shear} = \frac{52}{4{\cdot}22} = 12{\cdot}3.$$

We will use 14, as they give the best arrangement.

The strength of each rivet in bearing is equal to $\frac{3}{4} \cdot \frac{7}{8} \cdot 7 = 4{\cdot}58$ tons.

$$\therefore 14 \text{ rivets will be ample for bearing.}$$

The joint is then arranged as shown in Fig. 48. It is very important in such joints that the centre line of the rivets should coincide with the centre line of the tie bar or else the pull in the bar would be eccentric. In such joints, therefore, the rivets should always be arranged symmetrically with regard to the centre line of the tie bar.

(4) *Find the number of rivets necessary to the gusset plates, &c., at the base of a steel stanchion to the stanchion proper, the load carried being* 150 *tons. The diameter of the rivets is* $\frac{7}{8}$ *in. and the thickness of the plate* $\frac{1}{2}$ *in.*

The kind of base referred to is shown in Fig. 215. The rivets have to be designed in such cases so that they will carry the whole load, so that if the stanchion itself does not bear on the base plate the rivets will distribute the load satisfactorily.

$$\text{The strength of each rivet in single shear} = \frac{\pi}{4} \cdot \left(\frac{7}{8}\right)^2 \cdot 5 = 3{\cdot}01 \text{ tons.}$$

$$\text{The strength of each rivet in bearing} = \frac{7}{8} \cdot \frac{1}{2} \cdot 10 = 4{\cdot}37 \text{ tons.}$$

$$\therefore \text{Number of rivets necessary} = \frac{150}{3{\cdot}01} = 50 \text{ nearly.}$$

Digitized by Google

Some Practical Considerations in Riveted Joints.—PUNCHING AND DRILLING OF RIVET HOLES.—It is quite common in this country for specifications to state that rivet holes must be drilled out of the solid. Punching is known to injure to some extent the material in the neighbourhood of the hole, and is thus often objected to. The extent to which punched holes weaken a structure such as a plate girder compared with drilled holes does not appear to have been satisfactorily determined, although such determination from a practical point of view would seem to be absolutely necessary, since there is a large increase in cost entailed in drilling the holes. In recent years punching machines and means for obtaining an accurate pitch of the holes have been improved considerably, and when we consider the increased cost of the drilling and the necessary longer delay before delivery, in most cases we think that punching is preferable. A good compromise is to punch the hole $\frac{1}{4}$ to $\frac{1}{8}$ inch less than required, aud to reamer out to size, the damaged metal being thus removed; but this is considerably more expensive than plain punching. A method of allowing for the damage of metal due to punching which has been suggested, and which we consider preferable, is to add $\frac{1}{8}$ inch to the diameter of the hole in calculating the tearing or tensile strength. This adds very little to the size of the plate and saves a large amount in cost of production. The point that should be very carefully seen to is that the holes are accurately pitched, so that the holes will register well when the parts are assembled, and will not require excessive drifting as is the case when the spacing of the holes is inaccurate. It is probable that many more joints are unsatisfactory because the rivets do not fill the holes, owing to the latter not registering accurately, than because the metal has been injured owing to punching the holes.

There is considerable friction between the plates in a riveted joint, but this is not allowed for in calculations of the strength.

PITCH AND SPACING OF RIVETS.—In order to prevent moisture getting between the plates and causing bulging due to rusting, or to prevent local buckling in the case of compression members, it is common to stipulate that the pitch of rivets shall not be greater than 6 ins., or sixteen times the thickness of the thinnest plate.

Digitized by Google

The designer should remember that pitches from 3 ins. upwards, increasing by half-inches, should be used, and odd fractional pitches avoided, except where absolutely necessary. As far as economically possible, the same pitch should be used throughout, and in many cases, for girder work, &c., 4 ins. is used unless special conditions require a different pitch. We shall deal in detail with the arrangement of rivets for plate girders in Chap. XVIII., the rivets in this case not being designed by quite the same methods which we have just given.

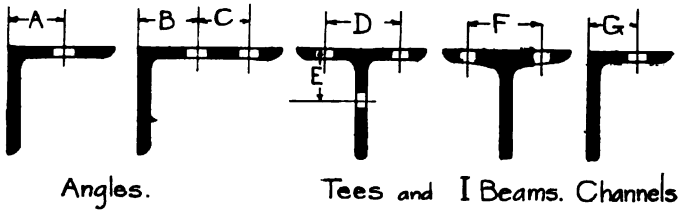

Fig. 49—Standard Spacing of Rivets in Rolled Sections.

The spacing of rivets in L, T and other similar sections, may be taken as given in the appended table, taken from the section book of Messrs. Redpath, Brown & Co., Ltd. In connection with these sections it should be remembered that theoretically the centre line of the rivets should come down the centroid line of the section, but in most cases this is practically impossible. In such cases where these sections are used alone as ties or struts—particularly the latter—it should be remembered that the loads will be somewhat eccentric, and so sections a little heavier than calculated are often necessary.

Cleat Connections for I Beams.—I beams are connected together by means of cleat connections. Standard dimensions for such connections may be obtained from the appended table, taken from the information given by Messrs. Redpath, Brown & Co., Ltd.

Fig. 51 shows various ways in which the ends of the beams may be notched, &c., for such cleat connections. (A) shows a plain notch at top, the bottom flange of the beam resting on the flange of the beam to which it is connected; (B) shows a plain

Digitized by Google

notch at top and angle bar at bottom ; (C) shows a shaped notch at each end resting on the flanges ; and (D) shows a plain notch at the top and a joggled joint at the bottom. Of these the joggled end is needlessly expensive. Sometimes fancy methods of connection

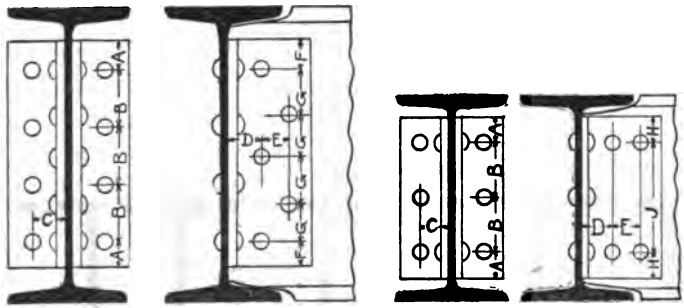

Fig. 50.—*Cleat Connections for* I *Beams.*

are seen, such as shaping the cleat to exactly fit between the flanges of the beam (C), but such methods usually are no better than the ordinary ones, and are nearly always much more expensive.

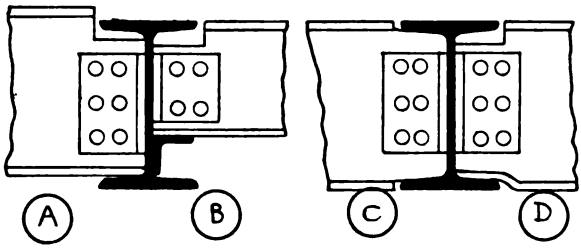

Fig. 51.

Pin Connections.—Pin connections are seldom used in this country nowadays, but occasionally they are necessary. When they are used they are designed in very much the same way as riveted joints. That is to say, the tearing, shearing, and bearing strengths of the joint should be made as nearly as possible equal to each other and to the tensile or compressive strength of the bar in which the pin-joint occurs. (See also Chap. XVII.)

Digitized by Google

Cleat Connections for I Beams. (*See* Fig. 50.)

Size of Beam	Length of Angle (6" × 3½" × ⅜")	No. of Rivets in each Angle	Dimensions (inches)									Diam. of Rivets (inches)
			A	B	C	D	E	F	G	H	J	
16 × 6	1′ 0″	9	1½	3	2	2¼	2¼	1½	2¼	—	—	¾
15 × 6 to 14 × 6	10½″	9	1½	2½	2	2¼	2¼	1½	1⅞	—	—	¾
12 × 6 to 12 × 5	8½″	7	1¼	3	2	2¼	2¼	—	—	1¼	6	¾
10 × 6	7″	7	1¼	2¼	2	2¼	2¼	—	—	1¼	4½	¾
10 × 5 to 9 × 4	7″	6	1¼	4½	2	2¼	2¼	—	—	1¼	4½	¾
8 × 6 to 7 × 4	5″	6	1¼	2½	2	2¼	2¼	—	—	1¼	4½	¾
6 × 5 to 5 × 3	3″	3	1½	—	2	2¼	2¼	—	—	1½	—	¾
4¾ × 1¾ to 4 × 1¾	2½″	3	⅞	—	2	2¼	2¼	—	—	—	—	⅝
3 × 3 and 3 × 1½	1¾″	3	⅞	—	2	2¼	2¼	—	—	⅞	—	⅝

Digitized by Google

Standard Spacing of Rivets. (*See* Fig. 49.)

Width in inches	Dimensions in Inches							Maximum Diam. of Bolt or Rivet (inches)
	A	B	C	D	E	F	G	
1¼	¾	—	—	—	—	—	—	¼
1½	⅞	—	—	—	—	⅞	—	⅜
1¾	1	—	—	—	—	—	1	⅜
2	1⅛	—	—	1⅛	1⅛	1⅛	—	½
2¼	1¼	—	—	1⅛	1¼	—	—	⅝
2½	1⅜	—	—	—	—	—	—	—
3	1¾	—	—	—	—	—	—	—
3½	2	—	—	—	—	—	—	—
4	2¼	—	—	2¼	2¼	2¼	—	⅞
4½	2½	2	1¼	2½	2½	2½	—	⅞
5	3	2	1¾	2¾	3	2¾	—	1
5½	3½	2¼	2	3	3½	—	—	1
6	3½	2½	2¼	3½	3½	3½	—	1
6½	—	2½	2½	4	—	4	—	1
7	—	2½	3	—	—	—	—	1
8	—	3	3	—	—	—	—	—

Working Strength of Steel Rivets.

Diam. of Rivets in ins.	Area in sq. ins.	Strength in single shear at 5 tons per sq. in.	Bearing Strength at 10 tons per sq. in. Thickness in ins. of plate.							
			5/16	3/8	7/16	½	9/16	⅝	11/16	¾
⅜	·1104	·55	1·17	1·41	1·64	1·87	2·11	2·34	2·59	2·81
½	·1963	·98	1·56	1·87	2·18	2·50	2·81	3·12	3·43	3·75
⅝	·3068	1·53	1·95	2·34	2·72	3·12	3·51	3·90	4·30	4·68
¾	·4418	2·21	2·34	2·81	3·27	3·75	4·21	4·69	5·16	5·63
⅞	·6013	3·01	2·72	3·27	3·82	4·37	4·91	5·46	6·02	6·56
1	·7854	3·93	3·12	3·75	4·37	5·00	5·62	6·25	6·87	7·50

Digitized by Google

CHAPTER V.

BENDING MOMENTS AND SHEARING FORCES ON BEAMS.

Definitions.—The *shearing force* at any point along the span of a beam is the algebraic sum of all the perpendicular forces acting on the portion of the beam to the right or to the left of that point.

The *bending moment* at any point along the span of a beam is the algebraic sum of the moments about that point of all the forces acting on the portion of the beam to the right or to the left of that point.

As the beam is in equilibrium under the forces acting on it, at any point the algebraic sum of the forces, and of the moments of the forces about the point, acting *on both* sides must be nothing; so that we shall get the same numerical values for the shearing force and bending moment from whichever side we consider them, but they will be opposite in sign. We will, wherever possible, always consider the shearing force and bending moment of the forces to the left of the section, and we will take an *upward* shearing force and an *anti-clockwise* bending moment as positive, the downward and clockwise being taken as negative.

Bending Moment and Shearing Force Diagrams.—If the bending moment and shearing force at every point of the span be plotted against the span and the points thus obtained be joined up, we shall get two diagrams called the Bending Moment (B.M.) and Shear diagrams, and from these diagrams the values of these quantities can be read off at any point of the span. We will consider the forms of these diagrams for various kinds of loading and for various ways of supporting the beam, and will first consider beams with fixed loads. We will use M_P and S_P to represent respectively the bending moment and shearing force at a point P.

Digitized by Google

B.M. AND SHEAR DIAGRAMS WITH FIXED LOADS.

A. Cantilevers, *i.e.*, Beams fixed at one end and free at the other, the loads being all at right angles to the length of the beam.

CASE 1. CANTILEVER WITH ONE ISOLATED LOAD.—Let a cantilever, fixed at the end B, Fig. 52, carry an isolated load W at the point A, at distance l from B. Consider any point P at distance x from A.

Then we have $S_P = W$.

This is constant throughout the span.

$\therefore$ Shear diagram is a rectangle of height W.

Again $M_P = W \times x$

This is proportional to x.

$\therefore$ B.M. diagram is a triangle whose maximum ordinate is Wl, this being the bending moment at the point B.

CASE 2. CANTILEVER WITH TWO ISOLATED LOADS.—Since the B.M. and shear at any point are defined as the sum of the moments and the forces to the left of that point, it follows that the B.M. and shear diagrams for a number of loads can be obtained by adding together the diagrams for the separate loads. In the present case, in which we have loads W_1 and W_2 at distances l_1 and l_2 from the fixed end, the diagrams are obtained by adding together the separate diagrams as shown in Fig. 52 (2).

CASE 3. CANTILEVER WITH UNIFORM LOAD.—Let a uniformly distributed load of p tons per foot run be carried by a cantilever A B of span l. Consider a point P at distance x from the free end A. Then

$$S_P = \text{load on A P}$$
$$= px$$

This is proportional to x, and therefore the shear diagram is a triangle, the maximum shear occurring at the end B, and being equal to pl or W, if W is the total load on the cantilever.

$$M_P = \text{moment of load } px \text{ about P}$$
$$= px \times \frac{x}{2}$$
$$= \frac{px^2}{2}$$

This is proportional to x^2, and therefore the B.M. diagram will be

Digitized by Google

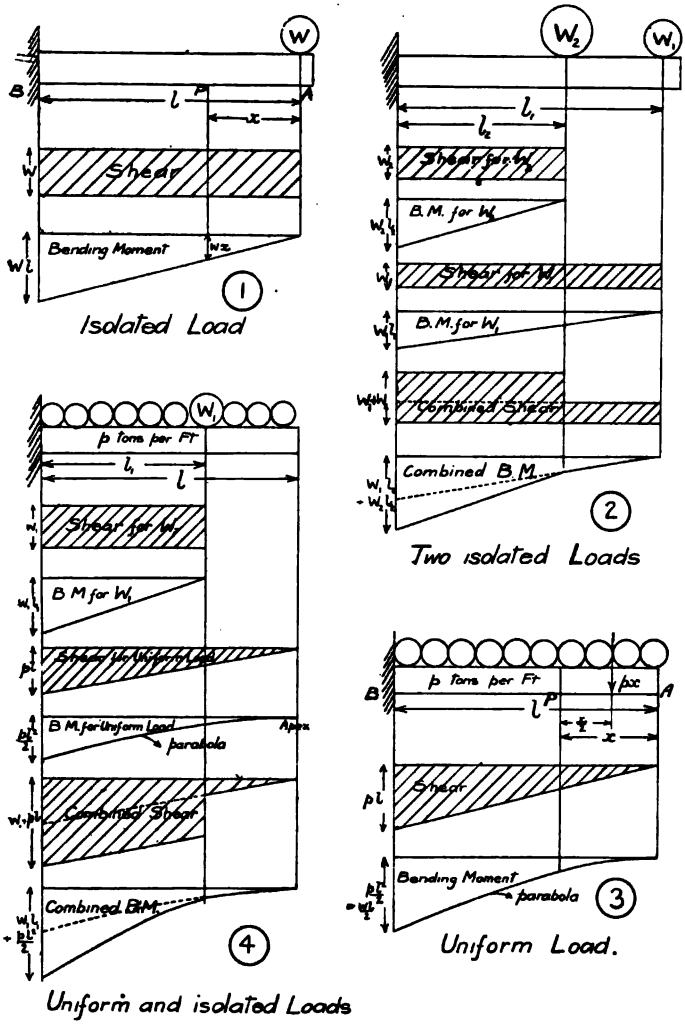

Fig. 52.—B.M. and Shear Diagrams for Cantilevers.

Digitized by Google

a parabola with vertex at A. The maximum B.M. will be equal to $\frac{p l^2}{2}$ or. $\frac{W l}{2}$ and occurs at B.

CASE 4. CANTILEVER WITH ISOLATED LOAD AND UNIFORM LOAD.—In this case, as in case 2, the shear and B.M. diagrams are obtained by drawing the separate diagrams in accordance with Cases 1 and 3, and then adding them together as shown in the figure.

CASE 5. CANTILEVER WITH UNIFORMLY INCREASING LOAD. —Suppose a cantilever A B carries a load which increases in intensity uniformly from the free end A to the fixed end B, Fig. 53. This occurs in practice in the case of a vertical wall or side of a tank subjected to water pressure.

Let the intensity of load at unit distance from A be p tons per foot run, then the intensity at any point P at distance x from A will be equal to $p x$. The intensity of load at B will be $p l$, and the total load equal

$$\frac{p l}{2} \times \frac{l}{2} = \frac{p l^2}{2} = W$$

S_P = total load to left of P

$$= p x \times \frac{x}{2} = \frac{p x^2}{2}$$

∴ Shear diagram is a parabola with vertex at A_1, the maximum shear at B being equal to W.

M_P = moment of load to left of P

$$= \frac{p x^2}{2} \times \frac{x}{3} = \frac{p x^3}{6}$$

∴ Shear diagram is a curve whose ordinates vary as x^3, such curve being called a parabola of the third order.

The maximum B.M. at B is equal to $\frac{p l^3}{6} = \frac{W l}{3}$

The diagrams then come as shown in Fig. 53.

CASE 6. CANTILEVER WITH IRREGULAR LOAD SYSTEM.—GRAPHICAL METHOD.—Suppose a number of loads 0,1, 1,2, and so on, Fig. 53, act on a cantilever. To obtain the shear and B.M. diagrams set down 0,1, 1,2, 2,3, &c., down a vector line 0,5 to represent the forces to some convenient scale, and take a pole

Digitized by Google

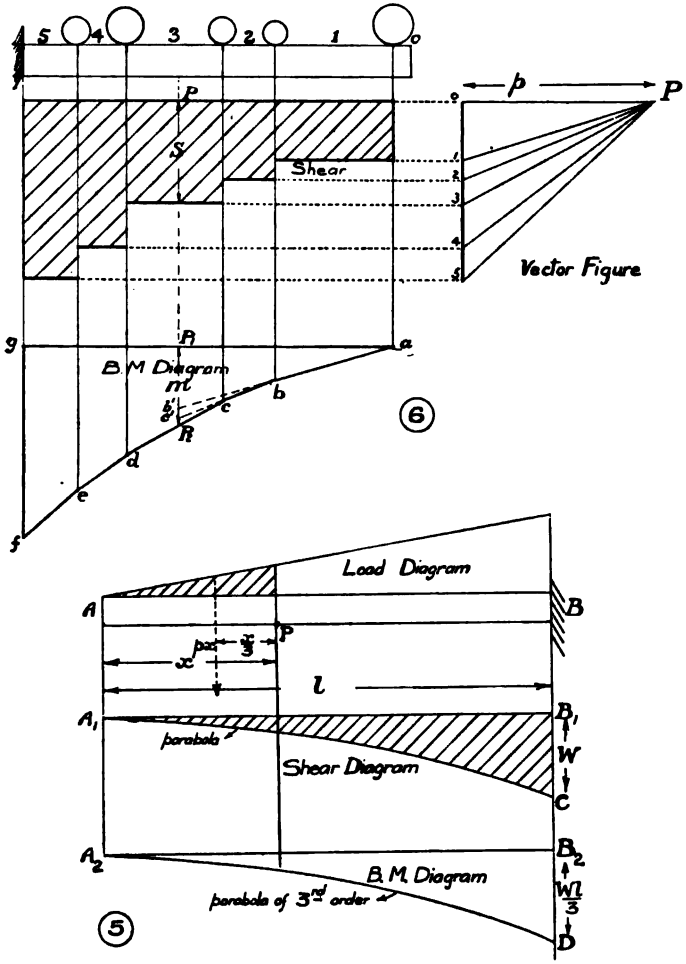

Fig. 53.—B.M. and Shear Diagrams for Cantilevers (continued).

Digitized by Google

P at some convenient distance p from the vector line 0, 5 and join P to each of the points 0 to 5 on the vector line.

Now across the lines of the forces draw $a g$ parallel to P 0; across space 1 draw $a b$ parallel to P 1; across space 2 draw $b c$ parallel to P 2, and so on until the point f is reached.

Then $a\ b\ c\ d\ e\ f\ g$ is the B.M. diagram.

To obtain the shear diagram, project the points 0–5 on the vector line across their corresponding spaces, the line through the point 0 being drawn right across the span, the stepped figure thus obtained being the shear diagram.

PROOF.—Consider any point P along the span, and produce $a b$ and $b c$ to cut the corresponding ordinate $P_1 P_2$ of the link polygon at b' and c' respectively.

Now consider the Δs $a\ P_1\ b'$ and P 0 1.

They are similar, and as the bases of similar triangles are proportional to their heights, we have

$$\frac{P_1 b'}{0, 1} = \frac{a P_1}{p}$$

$$\therefore p \times P_1 b' = 0, 1 \times a P_1$$

But $0, 1 \times a P_1$ = moment of force 0, 1 about P.

$\therefore p \times P_1 b'$ = moment of force 0, 1 about P.

Similarly it follows that

$p \times b' c'$ = moment of force 1, 2 about P,

and $p \times c' P_2$ = moment of force 2, 3 about P.

$\therefore$ We see that $p \times P_1 P_2 = p\ (P_1 b' + b' c' + c' P_2)$

= moment of all forces to left of P about P.

$= M_P$

$\therefore$ Since p is a constant quality, it follows that the ordinates of the link polygon represent the bending moments at the corresponding points of the beam.

Now consider the shear S at P. The total force to the left of P is 0, 1 + 1, 2 + 2, 3 = 0, 3, and this is obviously the value given on the shear diagram.

SCALES.—In all graphical constructions it is extremely important to state clearly the scales to which the various quantities are plotted, and to see that such scales are convenient for reading off.

Digitized by Google

Let the space scale be 1 in. = x feet
and the load scale on the vector line 1 in. = y tons
and let the polar distance be p actual inches.

Then the scale to which the bending moments can be read off is 1 in. = $p \times x \times y$ ft. tons.

p should thus be chosen so as to make this a convenient round number.

To take a numerical example, suppose the space scale is 1 in. = 4 ft. and the space scale is 1 in. = 2 tons, then if p is taken as $2\frac{1}{2}$ ins. the B.M. scale will be 1 in. = $4 \times 2 \times 2\frac{1}{2} = 20$ ft. tons.

If p has been taken 2 ins. the B.M. scale would have come 1 in. = 16 ft. tons, which would not be nearly such a convenient scale.

B. Simply Supported Beams—*i.e.*, beams simply resting on two supports, the loading all being at right angles to the length of the beam. Unless it is definitely stated to the contrary, we will always take it that the supports are at the ends of the beam.

In simply supported beams the forces acting are the loads and the reactions at the supports, the sum of the reactions being equal to the total load, and their values being obtained by means of moments as explained in Chapter II. As the ends are freely supported, there can be no bending moment at either end.

We will now consider the following standard cases:—

CASE 1. ISOLATED LOAD IN ANY POSITION.—Let a load W be supported at a point C on a beam A B of span l, the distances of the point C from B and A being b and a respectively.

Then to get the reaction R_B at B take moments round A.

$$\text{Then } R_B \times l = W \times a$$

$$R_B = \frac{W \times a}{l}$$

$$\text{Similarly } R_A = \frac{W \times b}{l}$$

Now consider a point p between B and C.

$$S_p = R_B = \frac{+W a}{l}$$

Digitized by Google

$\therefore$ between B and C the shear diagram is a rectangle of height $= \frac{W a}{l}$

Now take a point P′ between C and A.

$$S_{P'} = R_B - W$$
$$= \frac{W a}{l} - W = W\left(\frac{a - l}{l}\right) = \frac{-W b}{l} = -R_A$$

$\therefore$ Shear between C and A is a rectangle of height $= \frac{-W b}{l}$

In the case of the cantilever there was no need to distinguish between positive and negative shear because there was no change in direction of the shear; but in the present case there is a change in direction, and so we will use the rule given on *p.* 105.

Now considering the bending moment,

$$M_P = R_B \times x = \frac{W \cdot a \cdot x}{l}$$

This is proportional to x, and therefore the B.M. diagram between B and C will be a triangle, the B.M. at B being equal to $\frac{W a b}{l}$. If P were between c and a and at distance x' from A, we should have

$$M_P = R_B (l - x') - W (l - x' - b)$$
$$= R_B l - R_B \cdot x' - W l + W x' + W b$$
$$= x' (W - R_B) + W b - l (W - R_B)$$
$$= R_A \cdot x' + W b - l R_A$$
$$= \frac{W b x'}{l} + W b - W b$$
$$= \frac{W b x'}{l}$$

This is proportional to x', and therefore the B.M. diagram between A and C is also a triangle, the whole diagram then coming as shown in the figure.

CASE 2. ISOLATED LOAD AT CENTRE.—This is a special case of the preceding one, in which $a = b = \frac{l}{2}$

Each reaction is now equal to $\frac{W}{2}$ and the maximum B.M. $= \frac{W \times \frac{l}{2} \times \frac{l}{2}}{l} = \frac{W l}{4}$

Digitized by Google

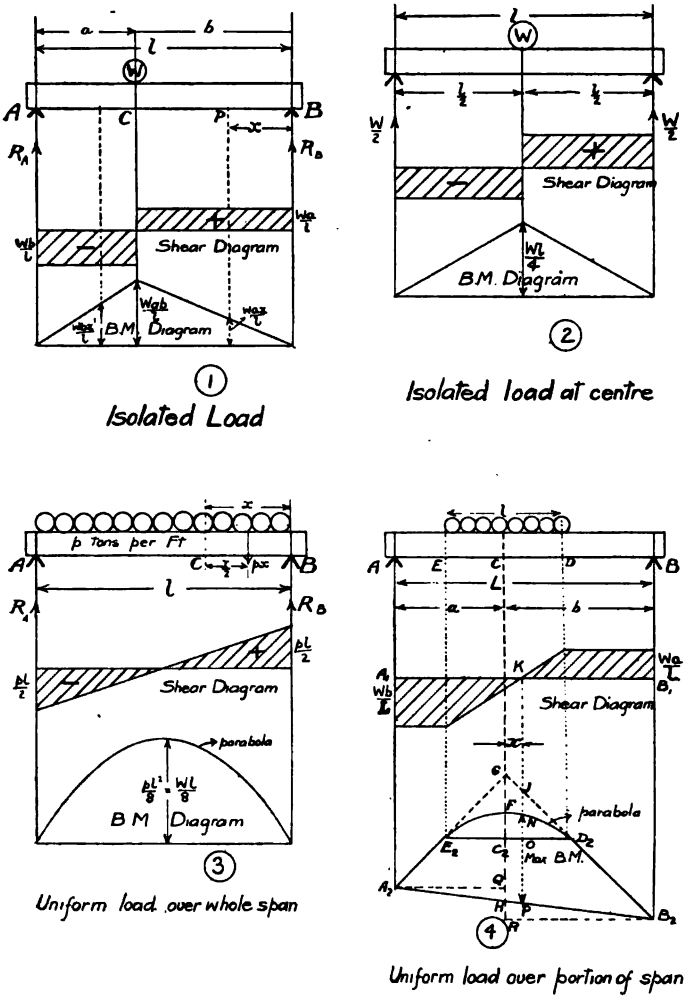

Fig. 54.—Simply-supported Beams.

Digitized by Google

CASE 3. UNIFORM LOAD OVER WHOLE SPAN.—Let a uniform load of p tons per ft. run cover the whole span A B, and consider a point C at distance x from B.

In this case the two reactions will, from symmetry, be equal, and each have the value $\frac{p\,l}{2}$ or $\frac{W}{2}$

$$\text{Then } S_C = R_B - p\,x = p\left(\frac{l}{2} - x\right)$$

This is a linear relation, therefore the shear diagram will be a triangle as shown, having values $\pm \frac{p\,l}{2}$ at the ends and changing sign at the centre.

Now consider the bending moment.

$$M_C = R_B \times x - p\,x \times \frac{x}{2}$$
$$= \frac{p\,l\,x}{2} - \frac{p\,x^2}{2} = \frac{p}{2}(l\,x - x^2)$$

This depends on x^2, and therefore the B.M. diagram will be a parabola.

The maximum B.M. will occur at the centre—*i.e.*, when $x = \frac{l}{2}$.

$$\text{Then maximum B.M.} = \frac{p}{2}\left(\frac{l}{2}\cdot\frac{l}{2}\right) - \left(\frac{l}{2}\right)^2 = \frac{p}{2}\left(\frac{l^2}{2} - \frac{l^2}{4}\right)$$
$$= \frac{p}{2} \times \frac{l^2}{4} = \frac{p\,l^2}{8} \text{ or } \frac{W\,l}{8}$$

CASE 4. UNIFORM LOAD OVER PORTION OF SPAN.—Let a uniform load of p tons per foot run and of length E D equal to l be placed on a beam A B of span L, and let the centre C of the load be at distance a and b respectively from A and B.

Then, if total load $p\,l = W$,

$$R_B = \frac{W\,a}{L} \text{ and } R_A = \frac{W\,b}{L}$$

The shear between B and D will be constant, and will be equal to $\frac{W\,a}{L}$; between D and E the shear will decrease uniformly until at E the shear will be equal to

$$R_B - W = \frac{W\,a}{L} - W = -\frac{W\,b}{L} = -R_B;$$

between E and A the shear will be constant and equal to $-\frac{W\,b}{l}$, the shear diagram then coming as shown on the figure.

Digitized by Google

The point K at which the shear is zero can be found as follows. Let it be at distance x from the centre C of the load.

$$\text{Then } S_K = R_B - p\left(\frac{l}{2} - x\right) = 0$$

$$i.e., \quad \frac{W a}{L} - \frac{p l}{2} + p x = 0$$

$$p x = \frac{p l}{2} - \frac{W a}{L} = \frac{p l}{2} - \frac{p l a}{L}$$

$$\therefore x = \frac{l}{2} - \frac{a l}{L} = l\left(\frac{1}{2} - \frac{a}{L}\right)$$

The B.M. diagram can be drawn by setting up a length $C_2 F = \frac{W l}{8}$, *i.e.*, the bending moment at the centre of the short span E D, then produce C_2 F to G, making F G equal to C_2 F and join G to E_2 and D_2, and produce to meet the reaction verticals in A_2 and B_2. Join $A_2 B_2$, and we then have the B.M. diagram as shown.

To prove that this gives the correct diagram, consider the bending moment at a point at distance x from the centre of the load.

$$\text{Then } M_X = R_B (b - x) - \frac{p}{2}\left(\frac{l}{2} - x\right)^2$$

$$= \frac{W a}{L}(b - x) - \frac{W}{2 l}\left(\frac{l}{2} - x\right)^2 \quad \ldots\ldots\ldots\ldots\ldots\ldots (1)$$

$$\text{Now, } \frac{G Q}{G C_2} = \frac{A_2 Q}{E_2 C_2}$$

$$\therefore G Q = \frac{G C_2 \times A_2 Q}{E_2 C_2} = \frac{W l}{4} \times \frac{a}{\frac{l}{2}} = \frac{W a}{2}$$

$$\text{Similarly } G R = \frac{W b}{2}$$

$$\therefore Q R = \frac{W}{2}(b - a)$$

$$\therefore Q H = \frac{Q R \times a}{L} = \frac{W a}{2 L}(b - a)$$

$$\therefore G H = G Q + Q H = \frac{W a}{2} + \frac{W a}{2 L}(b - a)$$

$$= \frac{W a}{2}\left(1 + \frac{b - a}{L}\right)$$

$$= \frac{W a}{2}\left(\frac{L + b - a}{L}\right) = \frac{W a (b + b)}{2 L} = \frac{W a b}{L}$$

Digitized by Google

Again $\frac{J P}{G H} = \frac{b - x}{b}$

$$\therefore J P = \frac{b - x}{b} \times G H = \frac{W a (b - x)}{L}$$

Again $\frac{J O}{G C_2} = \frac{O D_2}{C_2 D_2}$

$$\therefore J O = \frac{G C_2 \times O D_2}{C_2 D_2} = \frac{W l}{4} \times \frac{\frac{l}{2} - x}{l}$$

$$= \frac{W}{2}\left(\frac{l}{2} - x\right)$$

Then since curve is a parabola—

$$\frac{F C_2 - O N}{F C_2} = \left(\frac{O C_2}{C_2 D_2}\right)^2$$

$$\therefore \frac{\frac{W l}{8} - O N}{\frac{W l}{8}} = \frac{x^2}{\frac{l^2}{4}}$$

$$\therefore \frac{W l}{8} - O N = \frac{W l}{8} \times \frac{4 x^2}{l^2} = \frac{W x^2}{2 l}$$

or $$O N = \frac{W l}{8} - \frac{W x^2}{2 l}$$

$$\therefore N P = P J - J O + O N$$

$$= \frac{W a (b - x)}{L} - \frac{W}{2}\left(\frac{l}{2} - x\right) + \frac{W l}{8} - \frac{W x^2}{2 l}$$

$$= \frac{W a}{L}(b - x) - \frac{W}{l}\left(\frac{x^2}{2} - \frac{l^2}{8} + \frac{l^2}{4} - \frac{l x}{2}\right)$$

$$= \frac{W a}{L}(b - x) - \frac{W}{l}\left(\frac{x^2}{2} - \frac{l x}{2} + \frac{l^2}{8}\right)$$

$$= \frac{W a}{L}(b - x) - \frac{W}{2 l}\left(\frac{l^2}{4} - l x + x^2\right)$$

$$= \frac{W a}{L}(b - x) - \frac{W}{2 l}\left(\frac{l}{2} - x\right)^2$$

Comparing this with (1) we see that N P gives the B.M. at the given point.

We shall prove later (page 125) that the B.M. is a maximum at that point of the span where the shear is zero, and so the

Digitized by Google

vertical through *k* will give the maximum ordinate of the B.M. diagram.

CASE 5. IRREGULAR LOAD.—GRAPHICAL CONSTRUCTION.—Let a number of loads W_1, W_2, W_3, and W_4, be placed any-

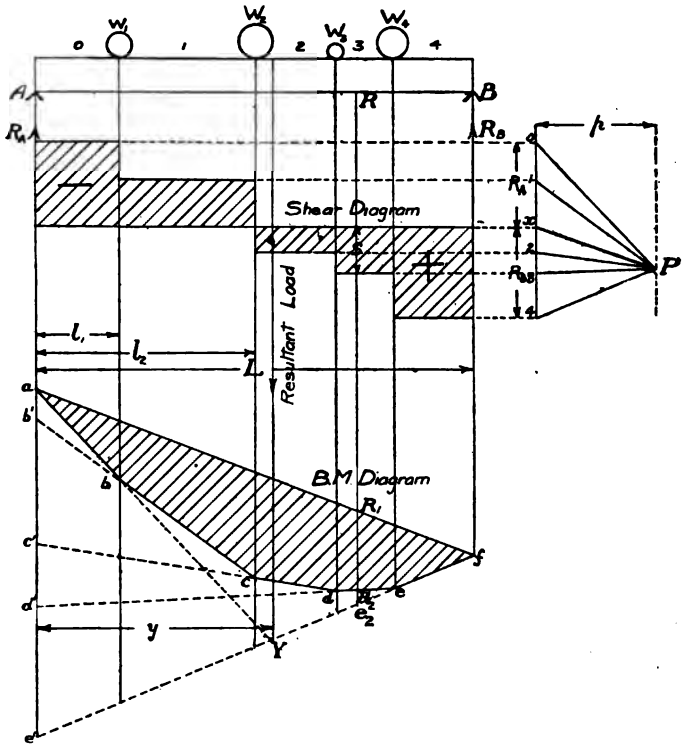

Fig. 55.—Graphical Construction for Shear and B.M. Diagrams.

where along a span A B. Number the spaces between the loads and set down 0, 1; 1, 2; 2, 3; 3, 4, as a vertical vector line to represent the loads to some convenient scale, and in *any position* take a point P at convenient polar distance *p* from the vector line, and join P 0, P 1, P 2, &c.

Across space 0 then draw *a b* parallel to P 0; across space 1

Digitized by Google

draw $b\,c$ parallel to P 1 and so on until $e\,f$ is reached, this being parallel to P 4.

Join $a\,f$, then the figure a, b, c, d, e, f, a, will give the B.M. diagram for the given load system.

Now draw P x parallel to $a\,f$, the closing link of the link polygon then on the vector line, $4\,x = R_B$ and $x\,o = R_A$.

To draw the shear diagram, draw a horizontal line through x right across the span: this gives the base line for shear. Now project the point o horizontally across space o; project point 1 across space 1 and so on, the stepped diagram thus obtained being the shear diagram.

PROOF.—Produce the links $c\,b$, $d\,c$, $e\,d$, $f\,e$ back to meet the vertical through A in b', c', d', e', and let the first link $a\,b$ produced meet the last link $e\,f$ in Y. Then, as we proved on page 54, the point Y is the point through which the resultant of the loads acts.

Now the triangles $a\,b\,b'$ and o P 1 are similar.

$$\therefore \frac{a\,b'}{l_1} = \frac{o,1}{p}$$

$$\therefore a\,b' = \frac{o,1 \times l_1}{p} = \frac{W_1 \times l_1}{p}$$

$$= \frac{\text{moment of first load about A}}{p}$$

$$\text{similarly } b'\,c' = \frac{\text{moment of second load about A}}{p}$$

and so on

$$\therefore a\,e' = a\,b' + b'\,c' + c'\,d' + d'\,e'$$

$$= \frac{\text{sum of moments of loads about A}}{p}$$

but $R_B \times L$ = sum of moments of loads about A

$$\therefore a\,e' = \frac{R_B \times L}{p}$$

Now consider Δs $a\,e'\,f$ and x 4 P; they are similar:

$$\therefore \frac{a\,e'}{L} = \frac{4\,x}{p}$$

$$\therefore 4\,x = \frac{p \times a\,e'}{L} = R_B$$

Similarly $x\,o = R_A$

Digitized by Google

Now consider any point R along the span.

$$S_R = R_B - W_4$$
$$= 4x - 3 = 3x$$

but the ordinate s of the shear diagram is equal to $3x$, and therefore the stepped figure gives the correct shearing force at any point.

Let the vertical through R cut the B.M. diagram in $R_1 R_2$ and fe produced in e_2.

Then by exactly similar reasoning as before :

$$R_1 e_2 = \frac{\text{moment of } R_B \text{ about R}}{p}$$

$$R_2 e_2 = \frac{\text{moment of W 4 about R}}{p}$$

$$\therefore R_1 R_2 = R_1 e_2 - R_2 e_2$$
$$= \frac{\text{moment of } R_B - \text{moment of W 4 about R}}{p}$$
$$= \frac{M_R}{p}$$

$$\therefore M_R = p \times R_1 R_2$$

$\therefore$ The ordinate of the B.M. diagram represents the B.M. at any point.

SCALES.—As in the case of the cantilever (page 110), if $1'' = x$ feet is the space scale and $1'' = y$ tons is the force scale, and if the polar distance is p actual inches, then the vertical ordinates of the B.M. diagram represent the bending moment to a scale $1'' = p \times x \times y$ ft. tons.

NOTE.—In this construction the bending moment $R_1 R_2$ is measured *vertically* and not at right angles to the closing line af.

CASE 6. IRREGULAR LOAD — OVERHANGING ENDS. — The construction just described is equally applicable to the case where the ends are overhanging. Fig. 56 shows such a case. Set out the loads down a vector line as before and take any pole P. Now draw ab parallel to P O across space O, *i.e.*, between the support vertical and the first force line. Then draw bc parallel to P 1 across space 1 and so on, the last link ef being drawn between the last force line and the reaction vertical. Joining af we get the B.M. diagram as shown.

Digitized by Google

To get the shear diagram draw P 5 parallel to *a f*, then the horizontal through gives the base line for the shear between A and B. The shears in the end spaces will be equal to the end forces 0, 1 and 3, 4 respectively, as shown on the figure.

This graphical loading is applicable to *all kinds of loading*, and any of the previous standard cases can be worked by its means.

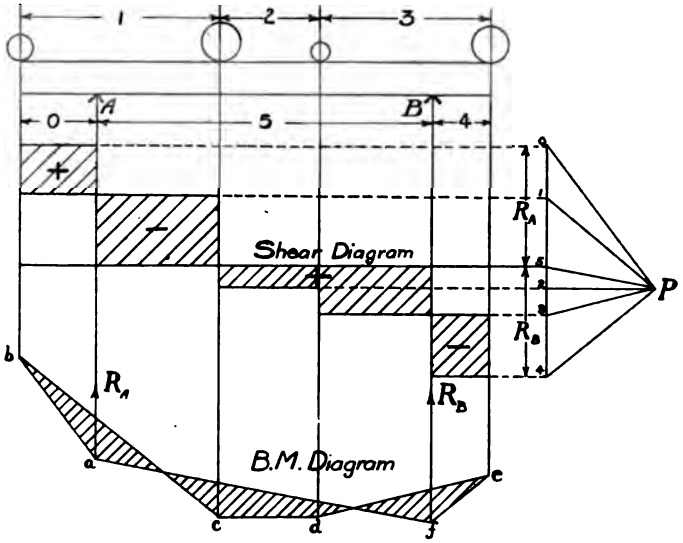

Fig. 56.—Beam with Overhanging Ends: Graphical Construction.

In the case of a continuous load the latter should be divided up into a number of small portions, and the load in each portion treated as an isolated load acting down the centre of such portion.

CASE 7. UNIFORMLY INCREASING LOAD.—Suppose a beam A B carries a load which increases in intensity uniformly from the end B to the end A. Let the intensity of the load at unit distance from B be p tons per ft. run; then the intensity at any point P at distance x from B will be equal to $p\,x$ (Fig. 57).

The intensity of the load at A will be equal to $p\,l$, and the total load W will be equal to $p\,l \times \frac{l}{2} = \frac{p\,l^2}{2}$

Digitized by Google

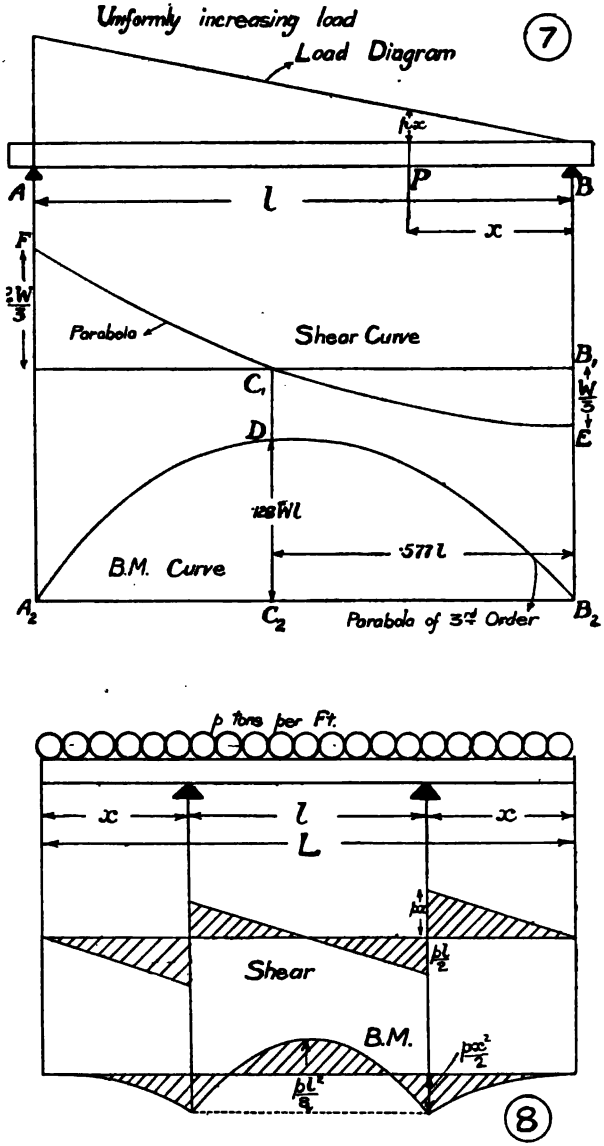

Fig. 57.—B.M. and Shear Diagrams (continued).

Digitized by Google

The resultant load W acts through the centroid of the load curve, *i.e.*, at distance $\frac{l}{3}$ from A.

$$\therefore R_B = \frac{W}{3}$$

$$R_A = \frac{2W}{3}$$

Then S_P = total load to left

$$= \frac{W}{3} - \frac{p x^2}{2}$$

This depends on x^2 and therefore the shear curve is a parabola.

The point c_1 is obtained as follows:

$$S_c' = 0 = \frac{W}{3} - \frac{p x^2}{2}$$

$$\therefore \frac{p x^2}{2} = \frac{W}{3} = \frac{p l^2}{2 \times 3}$$

$$\therefore x^2 = \frac{l^2}{3}$$

$$x = \frac{l}{\sqrt{3}} = .577 l$$

$$M_P = R_B \times x - \frac{p x^2}{2} \cdot \frac{x}{3}$$

$$= \frac{W x}{3} - \frac{p x^3}{6}$$

This depends on x^3, and so B.M. curve is a parabola of the third order.

The maximum B.M. occurs at the point of zero shear (see p. 125), *i.e.*, when $x = \frac{l}{\sqrt{3}}$

$$\therefore \text{Maximum B.M.} = \frac{W l}{3\sqrt{3}} - \frac{p l^3}{18\sqrt{3}}$$

$$= W l \left(\frac{1}{3\sqrt{3}} - \frac{1}{9\sqrt{3}} \right)$$

$$= \frac{2 W l}{9\sqrt{3}} = \frac{2 W l \sqrt{3}}{27}$$

$$= .128 W l$$

The B.M. and shear curves then come as shown in the figure.

Digitized by Google

CASE 8. UNIFORMLY LOADED BEAM WITH OVERHANGING END.—Let a beam of span L be loaded with a uniform load of p tons per foot run, and let it overhang a distance x at each end, the distance between the supports being l.

The overhanging portions act as cantilevers, and the shear and B.M. diagrams for such portions will be as shown. The B.M. for the centre portion will be a parabola drawn on the base shown dotted, the resulting curve being as shown cross-hatched.

If the load on the centre portion of the span were removed, the B.M. diagram would consist of the two end parabolas and the dotted line. This B.M. is opposite in direction to that due to the centre portion, and therefore on replacing the centre load and drawing the parabola, the resulting curve is the difference between the two as shown.

To find the value of x to get the least resultant B.M. we proceed as follows.

As x increases, the B.M. at the supports increases and the resulting B.M. at the centre decreases, so that the least B.M. will occur when the support B.M. is equal to the centre B.M.

$$\text{The support B.M.} = \frac{p x^2}{2}$$

$$\text{The centre B.M.} = \frac{p l^2}{8} - \frac{p x^2}{2}$$

$$\text{If these are equal } \frac{p x^2}{2} = \frac{p l^2}{8} - \frac{p x^2}{2}$$

$$\therefore p x^2 = \frac{p l^2}{8}$$

$$x = \frac{l}{2\sqrt{2}}$$

$$\therefore \frac{l}{L} = \frac{l}{l + 2x} = \frac{l}{l + \frac{l}{\sqrt{2}}}$$

$$= \frac{1}{1 + \frac{\sqrt{2}}{2}} = \frac{2}{2 + \sqrt{2}}$$

$$= \frac{2(2 - \sqrt{2})}{2} = 2 - \sqrt{2} = .586$$

This gives the position at which the legs of a trestle table should be placed to give the maximum strength to the latter

Digitized by Google

Relation between Load, Shear, and B.M. Diagrams.—Let A C′ D′ B, Fig. 58, represent the load curve on a span A B. Consider any point P along the span, and consider a short piece C D of the load, the centre of which is at distance x from P.

Then the shear at P due to this piece of the load will be equal to the area of the portion C D of the load curve. Therefore the

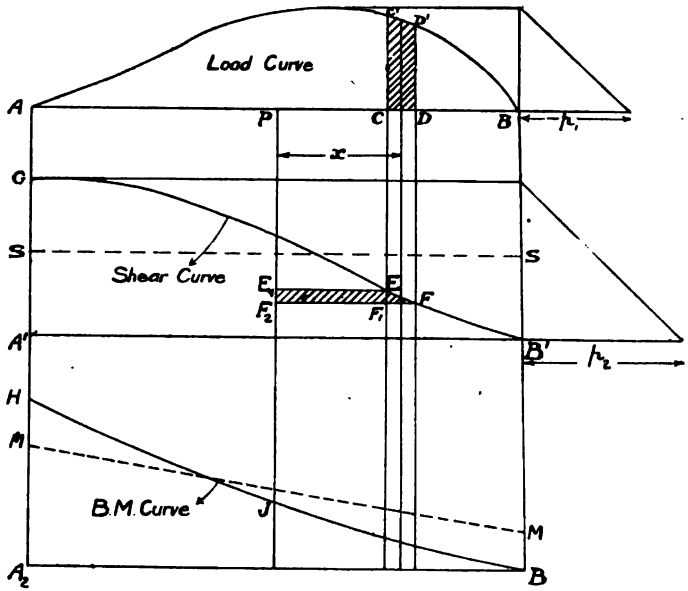

Fig. 58.—Relation between Load, Shear, and B.M. Diagrams.

total shear S_P at P will be equal to the area of the load curve up to that point.

But we have seen (p. 57) that a sum curve is such that its ordinate at any point represents the area of the primitive curve up to that point. Therefore *the shear curve is the sum curve of the load curve.*

Suppose B′ F E G A′ is the sum curve of the load curve. Now consider the B.M. at P.

The B.M. at P due to the portion C D of the load

= given portion of load × x.

Digitized by Google

Now if E and F are the corresponding points on the shear curve, the difference of the ordinates at C and D gives the load on the portion C D.

$\therefore$ Load on portion C D = E F_1.

$\therefore$ B.M. at P due to portion C D = E $F_1 \times x$.

$\therefore$ Shaded portion E F F_2 E_1 represents the B.M. at P due to the portion C D of the load.

$\therefore$ Total B.M. at P = M_P = area of shear diagram up to P.

Thus *the B.M. curve is the sum curve of the load curve.*

So that by drawing the sum curve B J H of the shear curve we get the B.M. curve.

SCALES.—If 1″ = x tons per foot is the scale of the load curve, and p_1 is the polar distance measured on the space scale for obtaining the shear curve, then the scale of the shear curve 1″ = $p_1 x$ tons. If p_2 is the polar distance from which the B.M. curve is obtained, measured on the space scale, the B.M. scale will be 1″ = $p_2 p_1 x$ foot tons.

POINT OF MAXIMUM B.M.—If the B.M. is a maximum, the tangent to the curve at this maximum must be horizontal, and therefore the corresponding ordinate on the shear diagram must be zero in order for the line through the pole to be also horizontal.

Thus we get the rule that the maximum B.M. occurs where the shear is zero.

The base lines S S and M M of the shear and B.M. curves depend on the manner in which the ends are fixed. If one end is free. the shear and B.M. at this point are zero. If one end is freely supported the shear at this point will be equal to the reaction, and the B.M. will be zero.

The above relations are expressed mathematically as follows: Let the load at any point at distance x from the origin be F (x)

Then the shear at the point will be $= \int F(x)\, dx + c_1$ and the B M will be $= \int\int F(x)\, dx + c_1 x + c_2$.

The integration constants c_1 and c_2 depend on the manner in which the ends are fixed, and correspond to the base lines above referred to.

Digitized by Google

B.M. and Shear Curves for Ships.—One of the best examples of the application of the sum-curve construction to shear and B.M. curves is to be found in the case of ships. Every ship must be looked upon as a beam subjected to a complex system of loading, and in the case of large ships the shear and B.M. diagram should be drawn from the proposed dimensions and loads before building.

The ship is divided up into a number of sections by planes drawn at short distances apart at right angles to the length of the ship. The volume of fluid displaced between each section up to the proposed water-line in smooth water is then calculated. The weight of each of these volumes of water is then, by the principles of Hydrostatics, equal to the upward pressure of the water on each section. In this way the upward pressure per foot length of the ship at various points of the ship's length is obtained, and by plotting these pressures along a base representing the length of the ship we get a curve called the *curve of buoyancy in smooth water*. This is the curve A D B (Fig. 59), and the area of the curve of buoyancy is equal to the total upward pressure of the water on the ship. The weight of the ship, including the structure, engines, probable cargo, &c., is then calculated for each section, and the weight per foot length of the ship is then plotted along the base A B to the same scale as the pressures, and the resulting curve is called the *curve of weights*.

The area of the curve of weights A C B is then equal to the total weight of the ship, and as the total weight of the ship must be equal to the total upward pressure of the water, the area of the curve of buoyancy must be equal to the area of the curve of weights. The difference between the curve of weight and the curve of buoyancy then gives the loads which the ship has to carry as a beam, and when plotted on a fresh base A_1B_1 gives the *load curve*.

The points E F at which the load curve crosses the base line are called 'water-borne' sections, and at these sections the shear will be a maximum. On finding the sum curve of the load curve we obtain the shear curve, and on sum-curving this we obtain the B.M. curve.

The above curves apply only to the ship when in smooth

Digitized by Google

water. When in rough water the problem becomes more difficult of solution, but the two principal cases to consider are those when a wave crest comes amidships and causes 'hogging strains,'

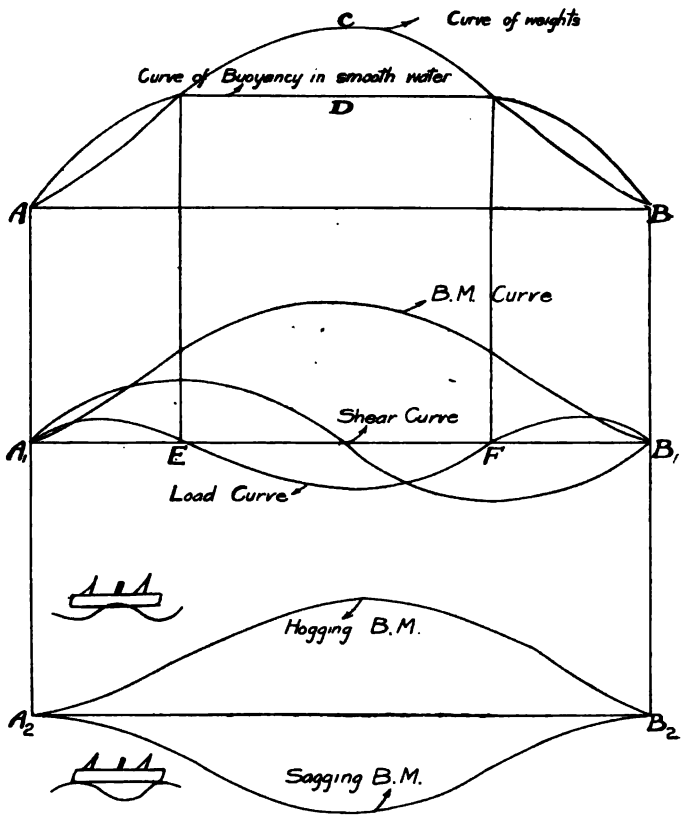

Fig. 59.—B.M. and Shear Curves for Ships.

and when a wave hollow comes amidships and causes 'sagging strains.' The figure shows these extreme cases diagrammatically.

The full discussion of this problem is beyond the scope of

Digitized by Google

this work, and for further information the reader is referred to books dealing particularly with the subject, such as Sir William White's *Naval Architecture.*

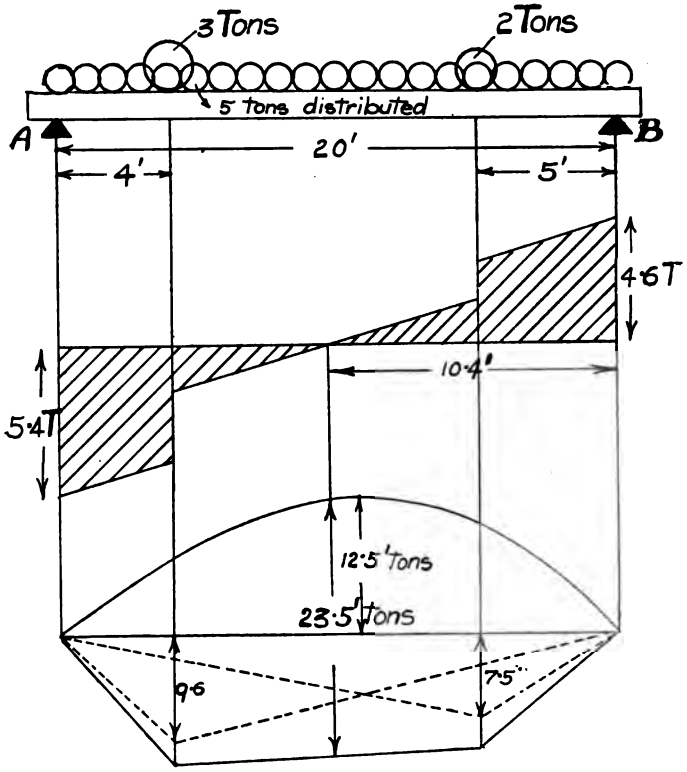

Fig. 60.

Steps in Shear Curves.—In practice it is impossible to get absolutely sharp steps in shear diagrams, because the load cannot be transmitted at a mathematical point, but must be distributed over a short length. This has the effect of slightly rounding off the corners of the shear diagram as shown exaggerated in dotted lines on Fig. 61, p. 131.

Digitized by Google

NUMERICAL EXAMPLES.

(1) *A freely supported beam of 20 ft. span carries a uniformly distributed load of 5 tons, and isolated loads of 3 and 2 tons, at distances respectively of 4 and 5 ft. from the ends (see Fig. 60).*

We have first to get the reactions R_A and R_B.

Take moments round B.

$$R_A \times 20 = 5 \times 10 + 3 \times 16 + 2 \times 5$$
$$= 50 + 48 + 10 = 108$$
$$\therefore R_A = \frac{108}{20} = 5{\cdot}4 \text{ tons}$$
$$\therefore R_B = 10 - 5{\cdot}4 = 4{\cdot}6 \text{ tons.}$$

The shear diagram then comes as shown in the figure, the amounts of the steps being equal to the isolated loads. The point at which the shear is nothing is found as follows :—

Let it be at distance x from B. Then

$$S.x = 0 = R_B - 2 - p.x$$
$$= 4{\cdot}6 - 2 - \frac{5.x}{20}$$
$$= 2{\cdot}6 - \frac{x}{4}$$
$$\therefore \frac{x}{4} = 2{\cdot}6$$
$$x = 10{\cdot}4 \text{ feet.}$$

The B.M. at this point will be a maximum, and will be equal to

$$M.x = R_B \times 10{\cdot}4 - 2(10{\cdot}4 - 5) - \frac{1}{4} \cdot \frac{10{\cdot}4^2}{2}$$
$$= 47{\cdot}84 - 10{\cdot}8 - 13{\cdot}52$$
$$= 23{\cdot}52 \text{ ft. tons.}$$

The B.M. diagram will consist of a parabola for the uniformly distributed load, the max. ordinate of which is equal to $\frac{5 \times 20}{8} = 12{\cdot}5$ ft. tons. The B.M. diagram for each of the isolated loads will be a triangle, the respective heights being $\frac{3 \times 4 \times 16}{20} = 9{\cdot}6$ ft. tons, and $\frac{2 \times 5 \times 15}{20} = 7{\cdot}5$ ft. tons. Combining these three figures we get the B.M. diagram shown on the figure, and on scaling off the maximum ordinate it will be found to be 23·5 tons.

NOTE.—In all constructions where diagrams are going to be added together, such diagrams must of course be drawn to the same scale.

Digitized by Google

(2) *A girder of 24 ft. span is supported at one end, and rests on a column at a point 6 ft. from the other end. The girder carries a uniformly distributed load of 6 tons and an isolated load of 2 tons at the free end. Draw the shear and B.M. curves.*

To find the reactions take moments round A (Fig. 61). Then

$$18\,R_B = 6 \times 12 + 2 \times 24 = 120$$

$$\therefore\ R_B = \frac{120}{18} = 6\tfrac{2}{3} \text{ tons}$$

$$\therefore\ R_A = 8 - 6\tfrac{2}{3} = 1\tfrac{1}{3} \text{ tons.}$$

The shear at C will be = 2 tons. It then increases until the point B is reached, when its value becomes equal to 3·5 tons. It then suddenly changes sign to a value 3·17 tons, and then decreases uniformly to the end A, where the value comes 1·33. The shear diagram then curves as shown in the figure, the dotted lines indicating what occurs in practice owing to the impossibility of getting the loads and reactions concentrated on a mathematical point.

Considering first the B.M. for the isolated and uniform loads separately, the B.M. curve due to the isolated load will come as shown in the figure, the B.M. at B being equal to $6 \times 2 = 12$ ft. tons. Now, considering the uniform load, the diagram for the portion B C will be a parabola with vertex at C, the ordinate $B_1 D$ at B_1 being $= \frac{p l^2}{2} = \frac{1}{4} \times \frac{6^2}{2}$ $= 4{\cdot}5$ ft. tons. Then between B and A the B.M. curve due to this overhanging load will be the straight line $A_1 D$, as such overhanging load requires an isolated balancing load at A.

The B.M. curve for the portion A B will be a parabola of central height $= \frac{p l^2}{8} = \frac{1}{4} \times \frac{18^2}{8} = 10{\cdot}12$ ft. tons, the shaded portion being the resulting curve for the central and overhanging portions of the uniform load. Combining these diagrams we get the resulting B.M. curve as shown, the max. B.M. occurring at B, and being equal to 16·5 ft. tons.

(3) *A beam of 20 ft. span carries loads of $\frac{1}{2}$, $\frac{1}{4}$, 1 and 2 tons, as shown on Fig. 20. Determine graphically the maximum B.M.*

Draw the B.M. curve by the link and vector polygon construction as shown in Fig. 55. Take the space scale 1″ = 4 ft.; the load scale 1″ = 2 tons; and the polar distance $1\frac{1}{4}$ inches. The maximum ordinate of the B.M. curve will then be found to be 1·09 inches. The scale of this will be $1'' = 1\frac{1}{4} \times 4 \times 2 = 10$ ft. tons.

$$\therefore \text{ Maximum B.M.} = 10{\cdot}9 \text{ ft. tons.}$$

Digitized by Google

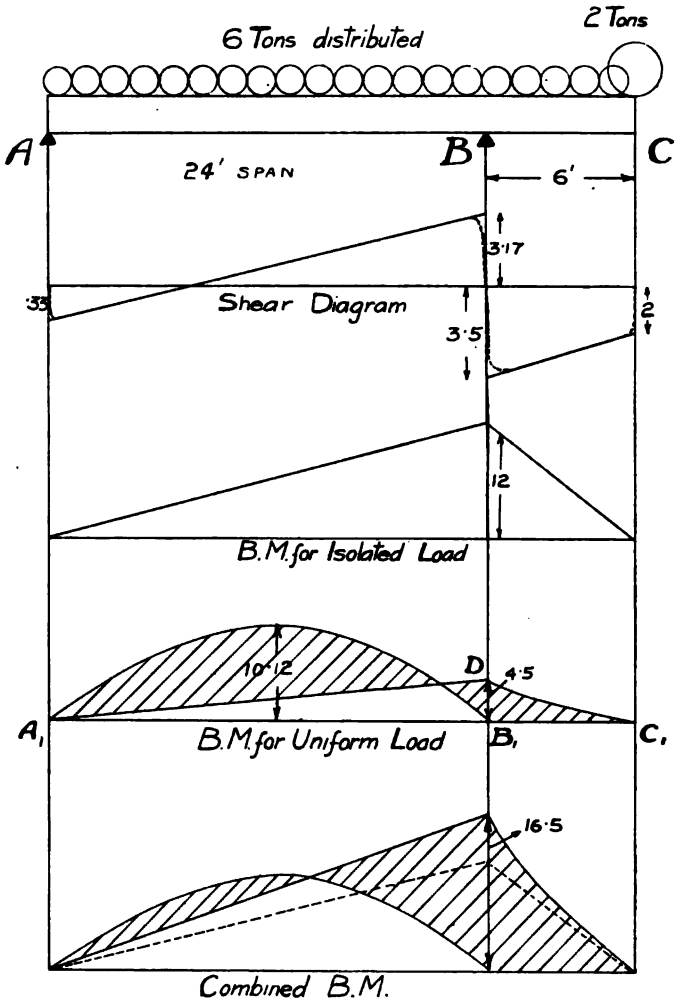

Fig. 61.

Digitized by Google

(4) *A barge 80 ft. long has for its curve of buoyancy a rectangle, its own weight being uniformly distributed. It is loaded with 40 tons of bricks, so that all vertical sections are trapezia with the horizontal sides 80 ft. and 40 ft. long. Draw curves of shear and B.M.*

If the curve of buoyancy of the barge is a rectangle, and its weight is uniformly distributed, then the curves of weight and buoyancy for the barge itself will neutralise each other, and there will be no shear or B.M. due to such weight. The curve of buoyancy due to the load will be a rectangle of height equal to half ton per foot run, since the total load is 40 tons.

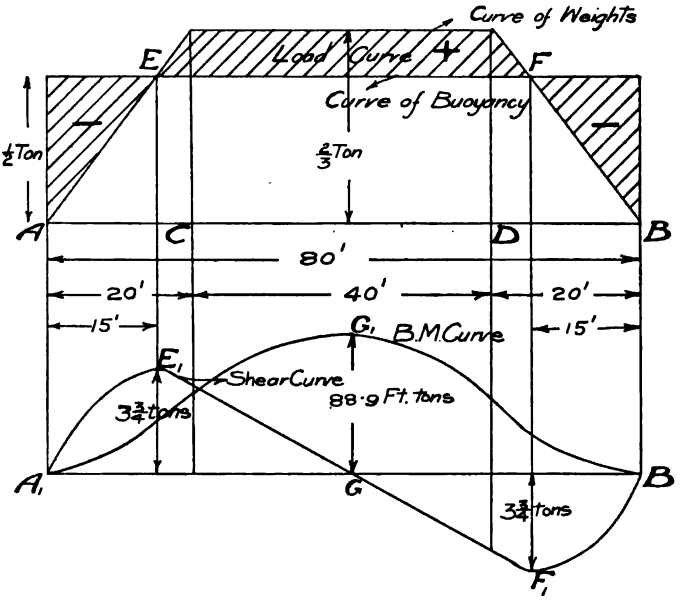

Fig. 62.—Loaded Barge.

The curve of weights will then be a trapezium of area representing 40 tons and parallel sides of 40 ft. and 80 ft.

$$\therefore \text{ Height of trapezium } = \frac{40}{\frac{1}{2}(40 + 80)} = \frac{2}{3} \text{ ton per ft. run.}$$

The difference between the curves of weights and buoyancy gives the load curve shown shaded on Fig. 62, the water-borne sections E F occurring at distances 15 ft. from either end. On taking the sum curve

Digitized by Google

of the load curve we get the shear curve A_1 E_1 G F_1 B_1 and on again sum-curving this we get the B.M. curve A_1 G_1 B_1. The scales may be worked as follows:—Let the space scale be 1″ = 10 ft. and the load scale 1″ = ¼ ton per ft. Then if the shear curve be drawn with a polar distance of 2 inches, *i.e.* 20 ft., the shear scale is 1″ = ¼ × 20 = 5 tons. If the B.M. curve is drawn with a polar distance of 2″, *i.e.*, 20 ft., then the B.M. scale will be 1″ = 20 × 5 = 100 ft. tons.

It will be found that the maximum shear is 3¾ tons, this at E_1 and F_1, and the maximum B.M. is 88·9 ft. tons at the centre.

NOTE.—The curves in the figure are not drawn to scale.

B.M. AND SHEAR DIAGRAMS FOR INCLINED LOADS.

In all the cases that we have considered up to the present all the loading has been at right angles to the length of the beam. We will now consider some cases in which this is not the case, and will take both horizontal beams with non-vertical loads and sloping beams. The principal difference in this case is that there will be thrust in the direction of the beam, and we shall have a curve of thrust in addition to the curves of shear and B.M.

The general rule is to resolve all forces, including the reactions, along and perpendicular to the beam. From the forces along the beam a curve of thrusts can be drawn, and from the forces perpendicular to the beam the curves of shear and bending moment are drawn in the ordinary manner.

We will define the **thrust** at any point of a beam as the sum of the components in the direction of the beam of all the forces to the right of it, remembering that if the thrust is negative it becomes a pull.

CASE 1. HORIZONTAL BEAM FREELY SUPPORTED SUBJECTED TO INCLINED LOADS.—Let a beam A B have inclined forces F_1 and F_2 (Fig. 63) meeting the centre line in C and D. Let the end A rest on a free support and let the end B be freely supported, but prevented from longitudinal movement as shown. If the resultant of F_1 and F_2 acted towards the end A, then this end would have to be prevented from movement. Resolve the forces F_1 and F_2 into vertical and horizontal components W_1 W_2 and Q_1 Q_2 respectively.

Then R_B will be inclined, the vertical component W_B being

Digitized by Google

that found by considering the forces W_1 W_2 in the ordinary way and the horizontal component Q_B being equal to Q_1 and Q_2.

The reaction R_A will be vertical, and will be obtained by considering the forces W_1 and W_2 in the ordinary way.

If the resultant of F_1 and F_2 were found it would pass through the intersection of R_A and R_B, since three forces in equilibrium must pass through a point.

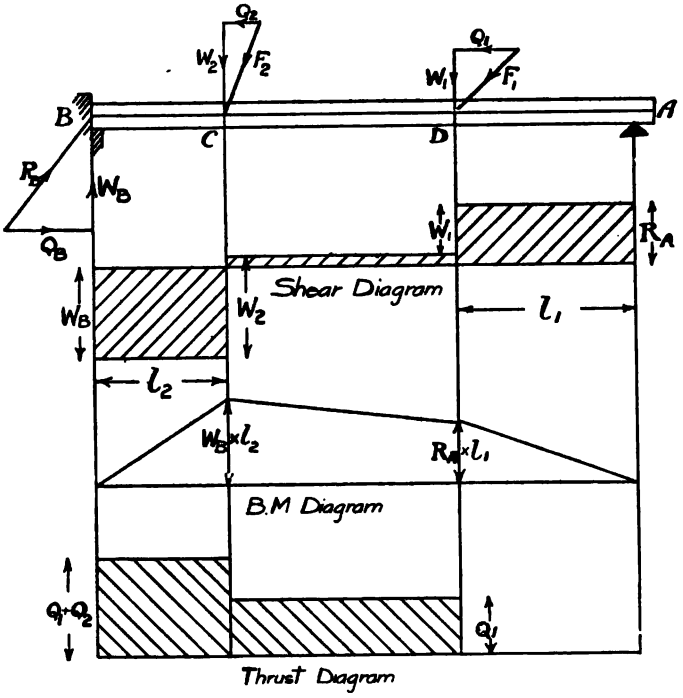

Fig. 63.—Beam with Inclined Loads.

The shear and B.M. diagrams are then found in the usual way for weights W_1 and W_2, and are as shown.

The thrust diagram is obtained by plotting up at each point the value of the thrust, and this comes as shown. The same method applies for any number of loads, two having been chosen to give simplicity of figure.

Digitized by Google

CASE 2. INCLINED BEAM WITH VERTICAL LOADS—REACTIONS PARALLEL.—Let an inclined beam A B (Fig. 64) be supported freely at A and pin-jointed at B. Then if it be subjected to

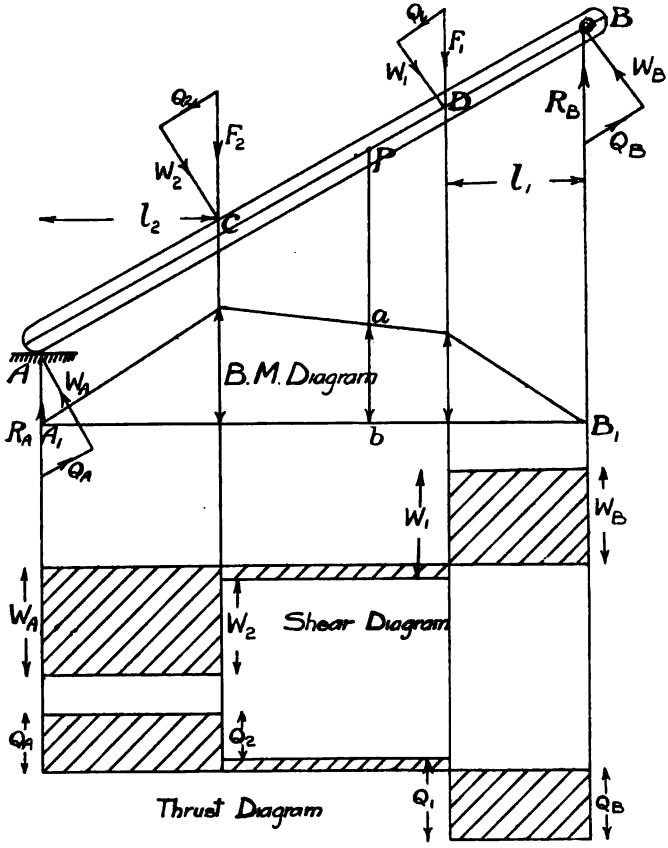

Fig. 64.—Inclined Beam with Lower End freely Supported.

vertical forces F_1 and F_2 at C and D, the reaction at A, and therefore also that at B, must be vertical, their values being found in the ordinary manner.

Now resolve the weights and reactions along and perpendicular

Digitized by Google

to the beam, obtaining weights W_B, W_1, W_2, W_A, and thrusts Q_B, Q_1, Q_2, Q_A.

Then the B.M. diagram can be drawn either on a sloping base A B or the projected horizontal base A_1B_1.

$$M_1 = W_B \times D B$$

$$\text{but } \frac{D B}{l_1} = \frac{R_B}{W_B}$$

$$\therefore \quad W_B \times D B = R_B l_1$$

∴ We see that for a sloping beam with vertical reactions the B.M. diagram is the same as for a horizontal beam of the same span as the horizontally projected length of the sloping beam.

The B.M. at a point P, for example, is obtained by drawing a vertical through it, $a\,b$ representing the B.M.

The shear and thrust diagrams are obtained as shown, and will be easily followed from the figure.

CASE 3. INCLINED BEAM WITH VERTICAL LOADS — TOP REACTION HORIZONTAL.—In this case the resultant load must first be found. Let this resultant act down the line x x (Fig. 65). The reaction R_B at B must be horizontal, so draw B x horizontal, then if this meets the line x x, R_A must also pass through x, so that by joining A x we get the direction of R_A. The values of R_A and R_B are then found by a triangle of forces a, b, c.

Now resolve the weights and reactions as before along and perpendicular to A B. The perpendicular components will be the same as before, and so the B.M. and shear diagrams will be the same as in the previous case (Fig. 64).

The thrusts will be different, and will be as shown on the figure, which will be clearly followed.

CASE 4. SLOPING CANTILEVER.—This is worked in a similar manner. Consider for example a uniform load of intensity p on a cantilever of length l at an inclination θ (Fig. 65*a*). The B.M. curve will be a parabola. Its maximum ordinate will be $\frac{p l^2 \cos \theta}{2}$, because the total weight will be $p l$, and it acts at a distance $\frac{l \cos \theta}{2}$ from the abutment. The shear diagram will be

Digitized by Google

a sloping straight line, the maximum shear being $p\,l\cos\theta$; the thrust diagram will also be a sloping straight line, the maximum thrust being $p\,l\sin\theta$.

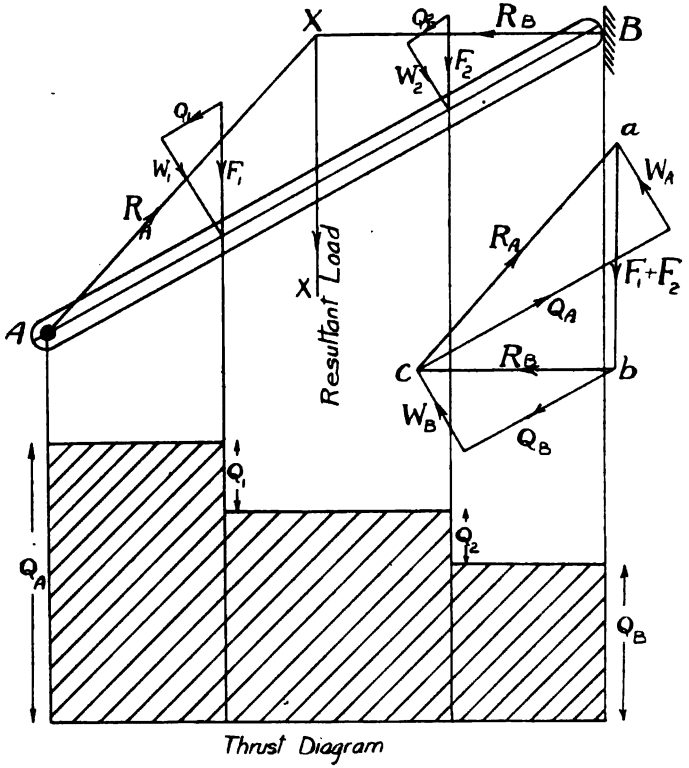

Fig. 65.—*Inclined Beam, with Top End freely Supported.*

General Case of Shear, Thrust, and Bending Moment.—LINE of PRESSURE.—We have seen in all the cases that we have considered up to the present that we have to know the reactions before we can determine the shear, thrust, and bending moment. We will now consider any beam or rib whose centre line is A B, and which is acted on by any system of forces

Digitized by Google

acting in the same plane, say forces F_1, F_2, F_3 (Fig. 66), and let the reactions be known in magnitude or direction, and be equal to R_A and R_B. Numbering the spaces between the forces as before, draw a vector figure o, 1, 2, 3, x.

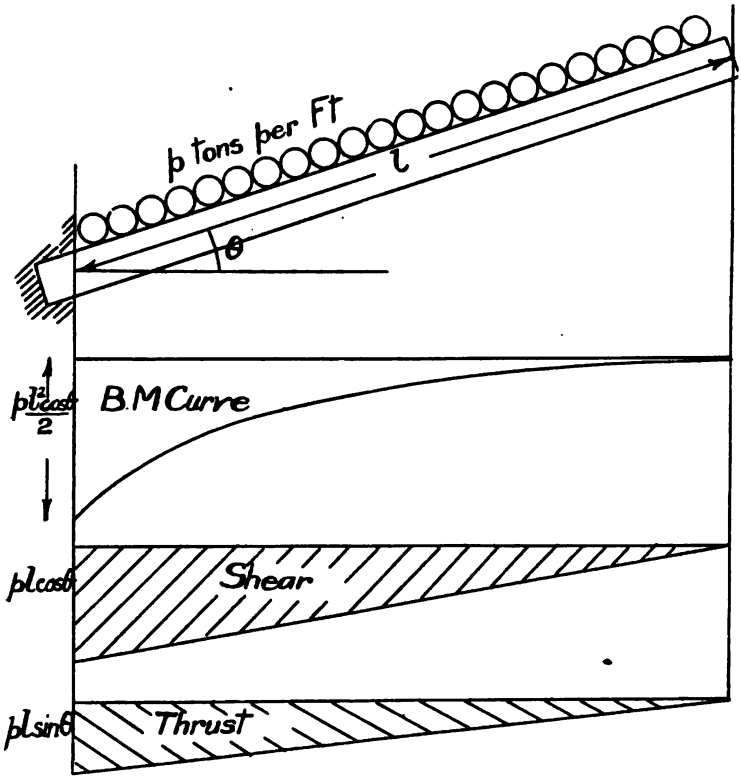

Fig. 65a.—Sloping Cantilever with Uniform Load.

Now taking x as a pole and *making the first link coincide with* R_B *the first force*, draw the link polygon B, *a*, *b*, *c*, A, the last link c A coinciding with the reaction R_A if correctly drawn. Then this link polygon is called the *line of pressure* of the structure.

Digitized by Google

Now suppose the forces F_1 F_2 F_3 meet the centre line of the structure in points D, E, &c.

Consider a cross section at any point P_1 between B and D. The stresses in the material across this section must keep in equilibrium all the forces to either side of it, *i.e.*, the force R_B. Produce the cross section to meet the line of action of R_B in L_1, a point called the *load point* for the given cross section.

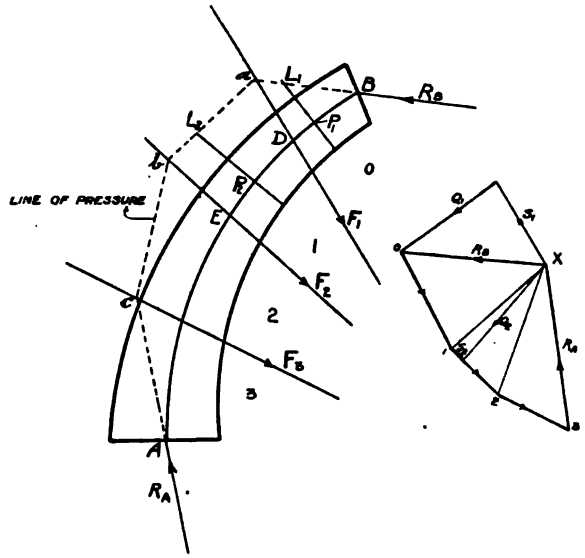

Fig. 66.—Line of Pressure.

If Q_1 and S_1 are the components of R_B, perpendicular to and along $P_1 L_1$, then the shear at the point P_1 is equal to S_1; the thrust is equal to Q_1; and the B.M. is equal to $Q_1 \times P_1 L_1$.

Similarly consider the cross-section at a point P_2 between D and E. The forces to the top of the section are R_B and F_1; their resultant is X 1, and it acts down the line of pressure *a b*. Let the cross section at P_2 meet the portion *a b* of the line of pressure or *a b* produced in L_2, then L_2 is the load point for the cross section at P, and by resolving X 1 perpendicular to and

Digitized by Google

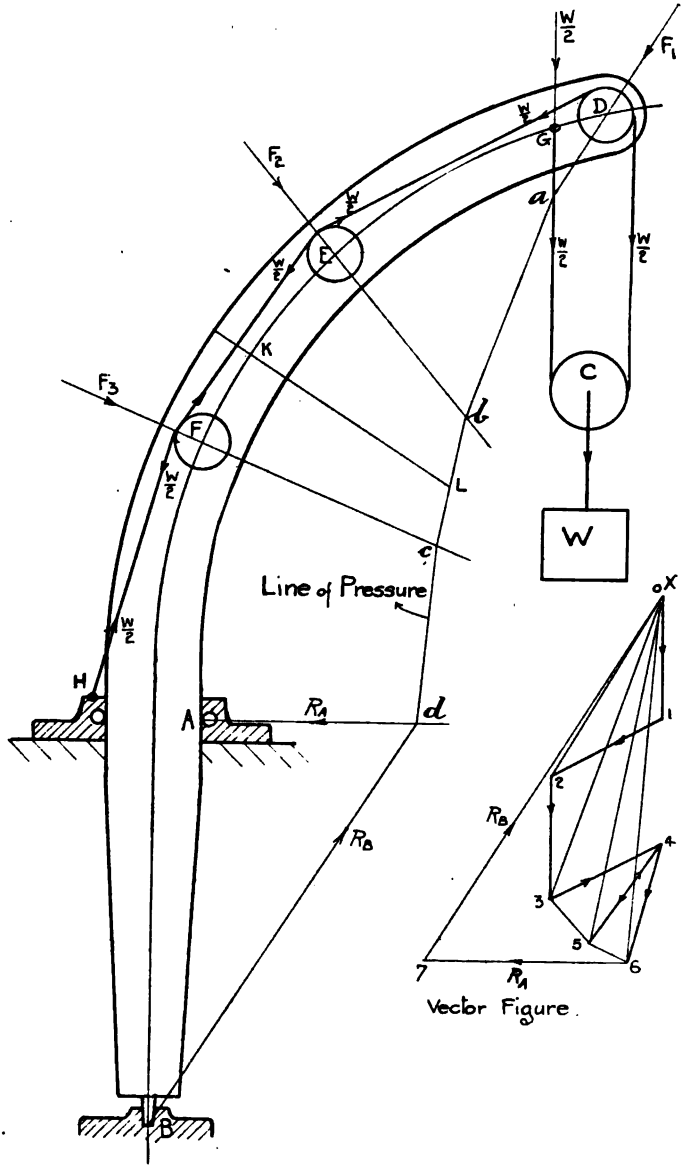

Fig. 67.—Line of Pressure for Crane.

Digitized by Google

along P_2 L_2 we get the shear, thrust, and bending moment as before. This construction is applicable to any structure, the only difficulty which occurs in many cases being the determination of the directions or values of R_A and R_B.

We shall deal at considerably further length with the line of pressure in considering the stability of arches and of masonry structures generally.

Consider for example the case of a curved crane provided with a ball or roller bearing at A, and having a pivot in the pit at B (Fig. 67).

The load W is carried from a pulley C, the chain carrying which is fixed to the crane at a point G, and passes over pulleys D, E, F, and then passes off the crane to the hoisting mechanism. The tension in the cable is then $\frac{W}{2}$.

Now commence drawing the vector figure by taking 0, 1 vertical to represent $\frac{W}{2}$ and 1, 2 parallel to the chain between D and E, then 0, 2 gives the force F_1 on the pulley D. The next force is a vertical one, $\frac{W}{2}$, acting through G, so draw 2, 3 vertically and equal also to $\frac{W}{2}$. Next draw 3, 4 and 4, 5 equal to $\frac{W}{2}$ and parallel respectively to the chain between D E and E F; then 3, 5 is equal to F_2 and if 4, 6 is drawn parallel to the chain between F and H, and is equal to $\frac{W}{2}$, then 5, 6 gives F_3.

Taking the pole X at the point 0, and making the first link coincide with F_1, we get the point *a* on the line of pressure. Then *a b*, *b c*, *c d* are drawn parallel respectively to 0, 3; 0, 5; 0, 6, the point *d* being on the horizontal line through A, since, owing to the roller bearing, R_A must be horizontal. If *d* is now joined to B we get the direction of the reaction R_B at B, and by drawing 6, 7; 0, 7 on the vector figure parallel to R_A and R_B respectively, we get the values of the reactions. Then if K represents any point on the centre line of the crane, and a cross section is drawn to meet the line of pressure in L, L is the load point, and if 0, 5 is resolved along and parallel to K L to give components S and Q

Digitized by Google

respectively, then the shearing force across the cross section is S; the thrust is Q, and the B.M. is Q × K L.

For B.M. and shear diagrams for rolling loads, fixed beams, and continuous beams, and for the lines of pressure for various structures the reader should consult the subsequent chapters.

A summary of the maximum B.M. and shear for various kinds of beams and loading will be found on p. 288.

Digitized by Google

CHAPTER VI.

STRESSES IN BEAMS.

We have seen in the previous chapter how the bending moment and shearing force at different points along a beam, loaded in various manners, can be found; our next problem is to find the relations between these quantities and the stresses occurring in the beam.

We shall get a good preliminary idea of the stresses occurring

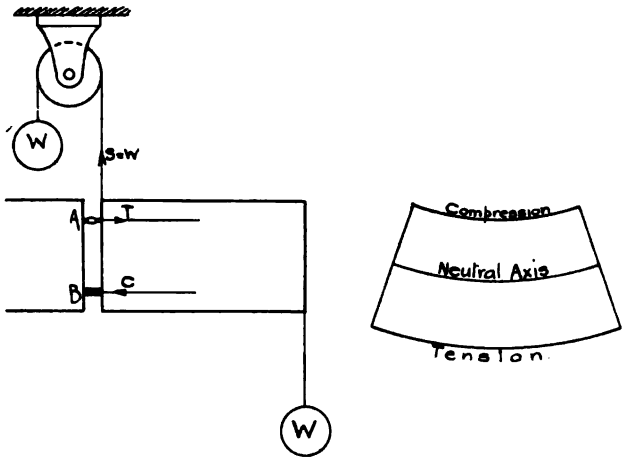

Fig. 68.—Stresses in Beams.

in beams by considering a model devised by Prof. Perry. Suppose that a beam fixed at one end carries a weight, W (Fig. 68), at the other end, and that it is cut through at a certain section. Then the right-hand portion can be kept in equilibrium by attaching a rope to the top and passing over a pulley, a weight W being attached to the other end of the rope, and by placing a block B at the lower

Digitized by Google

portion of the section and a chain A at the upper portion. Then the pull in the rope overcomes the shearing force; and the block B carries a compressive force C, and the chain A carries a tensile force T. Since these are the only horizontal forces, they must be equal and opposite, and thus form a *couple*. Then the moment of this couple must be equal and opposite to the couple, due to the loading, which we have called the bending moment.

In the actual beam, owing to the deflection which takes place, the material on one side of the beam will be stretched, and the material on the other side will be compressed, so that at some point between the two sides the material will not be strained at all, and the axis in the section of the beam at which no strain occurs is called the **neutral axis** (N.A.). We see, therefore, that:—*The neutral axis is the line in the section of a beam along which no strain, and therefore no stress, occurs.*

In an elevation of a beam there is also a line of no strain or stress, which may also be termed a neutral axis. These two axes are really the traces of a *neutral surface*.

If we know the manner in which the strain varies from the neutral axis to the outer sides of the beam, from a knowledge of the relation between stress and strain we can find the stresses at different points across the beam, remembering that the total compressive stress must be equal to the total tensile stress, and the moment of their couple must be equal to the bending moment. The moment of the couple due to the stresses is often called the *moment of resistance*.

Assumptions in Ordinary Beam Theory.—We will first make the following assumptions with regard to the bending of beams, and from such assumptions we will deduce a relation between the maximum stresses, due to bending at any cross section and the bending moment:—

(*a*) That for the material the stress is proportional to the strain, and that Young's modulus (E) is equal for tension and compression.

(*b*) That a cross section of the beam which is plane before bending remains plane after bending.

(*c*) That the original radius of curvature of the beam is very great compared with the cross-sectional dimensions of the beam.

Digitized by Google

We will also for the present restrict our investigation to the case of *simple* bending, *i.e.*, that in which the following conditions hold : -

(1) There is no resultant thrust or pull across the cross section of the beam.

(2) The section of the beam is symmetrical about an axis through the centroid of the cross section parallel to the plane in which bending occurs.

To get a clear idea of the stresses in beams it is absolutely necessary to have a clear idea of the assumptions involved in

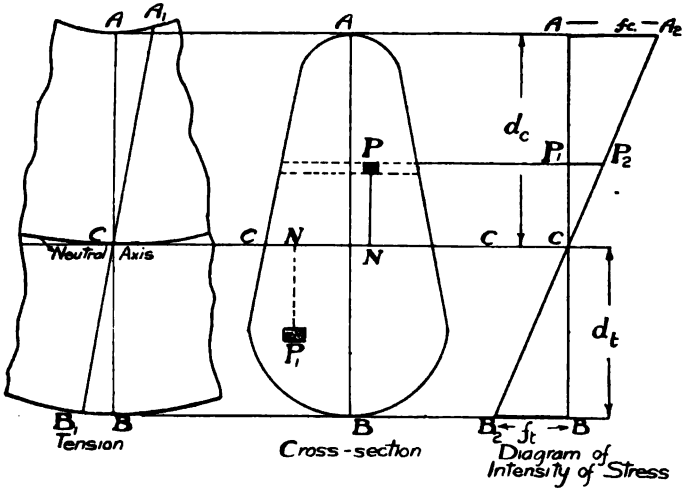

Fig. 69.—*Stresses in Beams.*

formulating any particular theory, and of the effect of such assumptions on the results.

Let A B, Fig. 69, represent the cross section of a beam which has been bent (the amount of bending having been exaggerated). Before bending, the line A B had the position $A_1 B_1$, so that $B B_1$ represents the maximum tensile strain, and $A A_1$ the maximum compression strain. From our assumption (*b*), called *Bernoulli's assumption* $A_1 B_1$ and A B are both straight lines. The neutral axis then passes through C, the point of no strain, and it follows from the above assumptions that the strains are proportional to the dis-

Digitized by Google

tances from the N.A. From assumption (*a*) it follows that the diagram of intensity of stress is also a sloping straight line, $A_2 B_2$, the portions $A_2 C$ and $C_2 A$ being continuous, because Young's modulus is equal in tension and compression.

It is clear that the maximum stresses in compression and tension occur at the points A and B, and let these be f_c and f_t respectively, d_c and d_t being the distance A C and B C.

Position of Neutral Axis.—Now consider an element of area a at a point P at distance P N from the N.A.

Then the stress at the point P is equal to $P_1 P_2$

$$\text{But } \frac{P_1 P_2}{P_1 C} = \frac{A A_2}{A C} = \frac{f_c}{d_c}$$

$$\therefore P_1 P_2 = \frac{f_c}{d_c} \times P_1 C$$

$$= \frac{f_c}{d_c} \times P N$$

$$\therefore \text{Stress carried by the element} = a \times \frac{f_c}{d_c} \times P N$$

$$\therefore \text{Total stress carried by section above N.A.} = \Sigma a \times \frac{f_c}{d_c} \times P N$$

$$= \frac{f_c}{d_c} \Sigma a \times P N$$

$$= \frac{f_c}{d_c} \times \text{first moment of area above N.A. about N.A.}$$

Similarly if an element of area at a point P_1 be considered, we see that

Total stress carried by section below N.A.

$$= \frac{f_t}{d_t} \times \text{first moment of area below N.A. about N.A.}$$

But we have seen that the total tension T must be equal to the total compression C, and it follows from assumptions (*a*) (*b*) that

$$\frac{f_c}{d_c} = \frac{f_t}{d_t}$$

$\therefore$ we see that the first moment of the areas above and below the N.A. about the N.A. are equal and opposite in sign. Therefore, the total first moment of the whole area about the N.A. is zero. But we have seen that the first moment of an area is zero about a line through the centroid.

Digitized by Google

Therefore, *in simple bending with the given assumptions, the neutral axis passes through the centroid.*

The Moment of Resistance (M.R.)—We have proved that the stress carried on an element a of area about a point P is equal to $a \times \frac{f_c}{d_c} \times PN$

The moment of this stress about the N.A.

$$= \text{stress} \times PN$$

$$= a \times \frac{f_c}{d_c} \times PN^2$$

$\therefore$ Total moment of all the stresses over the cross section

$$= \Sigma a . \frac{f_c}{d_c} \times PN^2$$

$$= \frac{f_c}{d_c} \Sigma (a \times PN^2)$$

$$= \frac{f_c}{d_c} \text{ (second moment of whole area about the N.A.)}$$

$$= \frac{f_c I}{d_c}$$

But the total moment of all the stresses is the moment of the couple which we have called the moment of resistance.

$$\therefore \text{ we see that M.R. } = \frac{f_c I}{d_c} \text{ or } \frac{f_t I}{d_t}$$

The moment of resistance must, as has already been shown, be equal to the bending moment, which we will call M.

$$\therefore M = \frac{f_c I}{d_c} \text{ or } \frac{f_t I}{d_t} \quad \ldots\ldots\ldots\ldots\ldots\ldots (1)$$

It will be seen that I, d_c and d_t depend merely on the shape of the cross section, and $\frac{I}{d_c}$ and $\frac{I}{d_t}$ are called the *compression modulus* and *tension modulus* respectively of the section, and are written Z_c and Z_t.

Thus our relation becomes

$$M = f_c Z_c = f_t Z_t \quad \ldots\ldots\ldots\ldots (2)$$

In practice we usually want to know f_c and f_t which give the

Digitized by Google

maximum stresses across the section, and so we will write the result as

$$f_c = \frac{M}{Z_c} \quad \ldots\ldots\ldots\ldots\ldots\ldots\ldots\ldots (3)$$

$$f_t = \frac{M}{Z_t} \quad \ldots\ldots\ldots\ldots\ldots\ldots\ldots\ldots (4)$$

In the case where the section is symmetrical about the N.A., d_c is equal to d_t, so that Z_c and Z_t are equal. In this case, therefore, $f_c = f_t$, and we may write the relation as

$$f = \frac{M}{Z}.$$

NUMERICAL EXAMPLES.

The following numerical examples will make it clear how the stresses in beams loaded in given manners can be found, and how a safe load can be found for a beam of given span and section.

(1) *The five sections a, b, c, d, e, Fig. 70, have each an area of 4 sq. ins. Find their relative strengths as beams for the same span, if they are of the same material.*

We have seen that $M = fZ$. Now if all the beams are loaded in the same way, M will be proportional to the load they can carry, and as f is the same for each, we see that their relative strengths as beams depend on their values of the modulus of each section. For table of second moments, see p. 81.

Section a.

$$I = \frac{b\,h^3}{12} = \frac{2 \times 2^3}{12}$$

$$Z = \frac{I}{d} = \frac{I}{1}$$

$$\therefore Z = \frac{2 \times 2^3}{12 \times 1} = \frac{2 \times 8}{12}$$

$$= 1{\cdot}33 \text{ in. units.}$$

Section b. This is composed of two triangles.

$$\therefore I = 2 \times \frac{bh^3}{12}, \; h \text{ in this case being the height of the triangle.}$$

$$\therefore I = \frac{2 \times 2{\cdot}828 \times 1{\cdot}414^3}{12}$$

$$d = 1{\cdot}414$$

$$\therefore Z = \frac{2 \times 2{\cdot}828 \times 1{\cdot}414^3}{1{\cdot}414 \times 12} = \frac{2{\cdot}828}{3}$$

$$= {\cdot}943 \text{ in. units.}$$

Digitized by Google

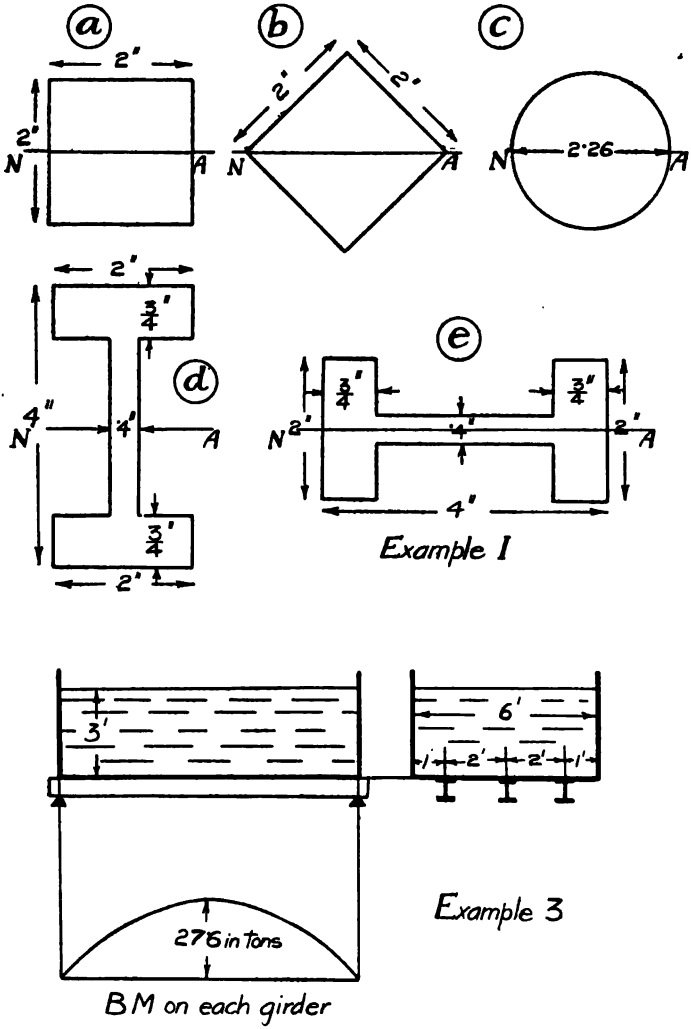

Fig. 70.—Examples of Beams.

Digitized by Google

Section c.

$$I = \frac{\pi d^4}{64} = \frac{\pi \times 2{\cdot}26^4}{64}$$

$$d = 1{\cdot}13$$

$$\therefore Z = \frac{\pi \times 2{\cdot}26^4}{64 \times 1{\cdot}13}$$

$$= 1{\cdot}13 \text{ in. units.}$$

Section d.

$$I = \frac{2 \times 4^3}{12} - \frac{2 \times 1{\cdot}8 \times 2{\cdot}5^3}{12}$$

$$= 10{\cdot}67 - 4{\cdot}69 = 5{\cdot}98$$

$$d = 2''$$

$$\therefore Z = \frac{5{\cdot}98}{2}$$

$$= 2{\cdot}99 \text{ in. units.}$$

Section e. This is composed of three rectangles.

$$\therefore I = \frac{{\cdot}75 \times 2^3}{12} + \frac{2{\cdot}4 \times {\cdot}4^3}{12} + \frac{{\cdot}75 \times 2^3}{12}$$

$$= {\cdot}5 + {\cdot}013 + {\cdot}5$$

$$= 1{\cdot}013$$

$$d = 1''$$

$$\therefore Z = 1{\cdot}013 \text{ in. units.}$$

We see, therefore, that the order of the sections, from strongest to weakest, is *d*, *a*, *c*, *e*, *b*.

We may take it, as a rule, that the strongest beam for a given area of cross section is that which has a depth as great as is practically possible, and which has as much as possible of the metal at the outer portions of the beam.

(2) *A girder of* 20 *ft. span carries a uniformly distributed load of* 10 *tons, and a central load of* 4 *tons. Find a suitable British standard beam section for the girder if the maximum stress is to be* 7 *tons per sq. in.*

Its maximum B.M. due to the uniform load will be equal to $\frac{W\,l}{8}$ (see Fig. 54, Cases 2 and 3)

$$= \frac{10 \times 20 \times 12}{8} \text{ in. tons}$$

$$= 300 \text{ in. tons.}$$

The maximum B.M. due to the central load $= \frac{W_1\,l}{4}$

$$= \frac{4 \times 20 \times 12}{4}$$

$$= 240 \text{ in. tons.}$$

Digitized by Google

These both occur at the same point, so that the maximum B.M. due to both loads = 540 inch tons.

Now $M = f Z$

i.e. $540 = 7 Z$

$\therefore Z = \frac{540}{7} = 77{\cdot}14$ in. units.

On referring to the table of standard sections (Appendix), we see that the section having the nearest modulus to this is a 14 × 6 × 57 lb. section for which Z = 76·12, and we will adopt this section as being sufficiently strong.

(3) *A tank which weighs ½ ton and measures* 10′ × 6′ × 3′ *is filled with water, and carried on three girders placed lengthwise, so that each girder takes an equal weight. If the girders are* 6″ × 3″ × 12 *lb. Standard Beams find the maximum stress in each.* (*A.M.I.C.E. Feb. 1903. Altered slightly.*)

Weight of water in tank $= \frac{10 \times 6 \times 3 \times 62{\cdot}5}{2240}$ tons

$= 5{\cdot}02$ tons.

$\therefore$ Total weight carried by girders $= 5{\cdot}02 + {\cdot}5 = 5{\cdot}52$ tons

$\therefore$ Maximum B.M. on each girder $= \frac{5{\cdot}52}{3} \times \frac{10 \times 12}{8}$

$= 27{\cdot}6$ in. tons.

Z for a 6′ × 3′ × 12 lb. beam is 6·736 in. units

$\therefore f = \frac{27{\cdot}6}{6{\cdot}736} = 4{\cdot}1$ tons per sq. in.

(4) *A cast-iron beam is the shape of an inverted* T, 9 *in. deep over all, width of flange* 6 *in., thickness of web and flange* 1 *in. If its length is* 12 *ft. find what weight at the centre will cause a tensile stress of* 1 *ton per sq. in. in the flange. What would the maximum compressive stress then be?* (*A.M.I.C.E. Oct. 1902.*)

First find the centroid and second moment of the section. (See Fig. 71.)

Area of section = A = 9 × 1 + 5 × 1 = 14 sq in.

1st Moment about base = $Ad = (9 \times 1) \times \frac{9}{2} + 2\,(2\frac{1}{2} \times 1) \times \frac{1}{2}$

$= 40{\cdot}5 + 2{\cdot}5 = 43$

$\therefore d = \frac{43}{14} = 3{\cdot}07$ in.

2nd Moment about base = $I_x = \frac{1 \times 9^3}{3} + \frac{2 \times 2\frac{1}{2} \times 1^3}{3}$

$= 243 + 1{\cdot}67 = 244{\cdot}67$

Digitized by Google

$\therefore$ 2nd Moment about parallel line through centroid

$$= I_c = I_x - A d^2$$
$$= 244{\cdot}67 - 14 \times 3{\cdot}07^2$$
$$= 244{\cdot}67 - 132{\cdot}07$$
$$= 112{\cdot}6 \text{ in. units.}$$

$$\therefore Z_c = \frac{112{\cdot}6}{9 - 3{\cdot}07} = \frac{112{\cdot}6}{5{\cdot}93}$$
$$= 18{\cdot}99 \text{ in. units.}$$

$$Z_t = \frac{112{\cdot}6}{3{\cdot}07} = 36{\cdot}67 \text{ in. units.}$$

$\therefore$ Safe B.M. in tension $= f_t \times Z_t$
$= 36{\cdot}67$ in. tons.

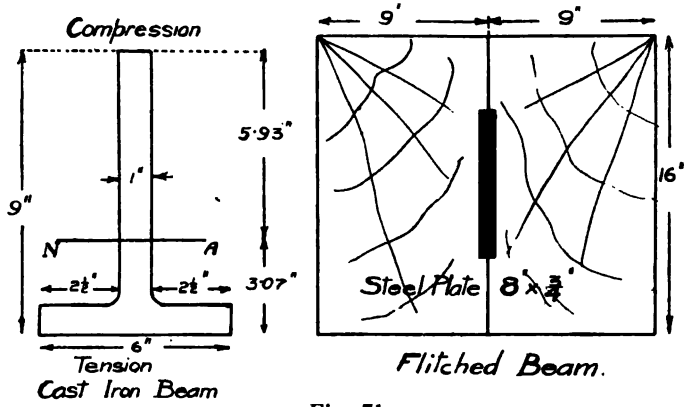

Fig. 71.

Neglecting weight of beam itself, if central load is W, the maximum is $\frac{W l}{4}$

$$\therefore \text{Maximum B.M.} = \frac{W l}{4} = \frac{W \times 12 \times 12}{4} = 36\,W \text{ in. tons.}$$

$$\therefore W = \frac{36{\cdot}67}{36} = \underline{1{\cdot}02 \text{ tons.}}$$

$$\text{The compression stress} = \frac{f_t \times d_c}{d_t} = \frac{1 \times 5{\cdot}93}{3{\cdot}07} = 1{\cdot}93 \text{ tons per sq. in.}$$

5) *A flitched beam consists of two timbers, each* 9 *in. thick and* 16 *in. deep, and a steel plate placed symmetrically between them, the steel plate being* 8 *in. deep and* $\frac{3}{4}$ *in. thick. If* E *for timber is* 1,500,000 *lb. per sq. in. and for steel* 30,000,000 *lb. per sq. in.; find the maximum*

Digitized by Google

tensile stress in the steel plate when the maximum tensile stress in the timber is 1000 *lb. per sq. in.*

Determine also for the same intensity of stress in the timber the percentage increase of load the flitched beam will carry as compared with the two timbers when not reinforced with the steel plate. (*B.Sc. Lond. 1907.*)

Using the notation given on p. 80, we see that $e = \frac{30,000,000}{1,500,000} = 20$ (see Fig. 71).

∴ The steel plate is equivalent to a timber 20 times as wide, *i.e.*, a timber 15 × 8 ins.

∴ For the equivalent section of timber for the whole flitched beam

$$I_2 = \frac{2 \times 9 \times 16^3}{12} + \frac{(15 - \frac{3}{4})\,8^3}{12}$$

$$= 6144 + 608$$

$$= 6752 \text{ in. units.}$$

For the timber beam not reinforced I = 6144.

When the stress in the timber at the outside of the section is 1000 lb. per sq. in., that 4 ins. below the N.A. *i.e.*, at the maximum depth of the equivalent timber plate will be

$$\frac{4}{8} \times 1000 = 500 \text{ lb. per sq. in.}$$

But steel carries 20 times the stress in the timber for the same strain.

∴ Stress in steel = 20 × 500 = 10,000 lb. per sq. in.

For the flitch beam the equivalent modulus is $\frac{6752}{8} = 844$ in. units.

$$\therefore \text{ Safe B.M. in ft. lb.} = \frac{844 \times 1000}{12} = 70,333$$

For the plain timber beam $Z = \frac{6144}{8} = 768$ in. units

$$\therefore \text{ Safe B.M. in ft. lb.} = \frac{768 \times 1000}{12} = 64,000$$

∴ Increased B.M. carried by flitched beam = 6333

$$\therefore \text{ \% increase} = \frac{6333}{64000} \times 100 = 9{\cdot}9 \text{ \%}$$

We shall have further numerical examples on the stresses in beams at various points in the book.

Influence of Shearing Force on Stresses in Beams.—It must be remembered that up to the present we have considered only the tensile and compressive stresses due to the bending moment. Besides these stresses there are the tangential

Digitized by Google

stresses due to the the shearing force. The resultant stress at any internal point of the beam is the resultant or principal stress of the tangential and direct stresses, which resultant is found as shown in Chapter I. We shall deal in a subsequent chapter with the distribution of the shearing stresses across the section of the

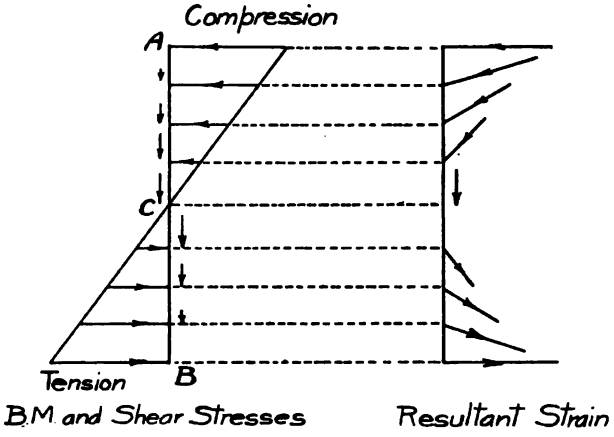

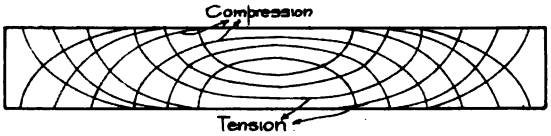

Fig. 72.—Principal Stresses in Beams.

beam, but for the present we will assume that the shear stress is a maximum at the centroid and diminishes to zero at the extremities. Fig. 72 shows diagrammatically the shear and direct stresses across the cross section of a beam and also the resultant stresses which, as it will be seen, are parallel to the centre line of the beam at the extremities and are perpendicular to it at the centroid.

If the principal stresses at various depths be found for a

Digitized by Google

number of cross sections at various points along the span, and the points of equal principal stress be joined up by a curve, we get a number of lines of equal principal stress. Such curves will be found in Rankine's *Applied Mechanics*, and are of the form shown in Fig. 72, although it must be remembered that the form of such curves will depend on whether the maximum strain or the maximum stress is considered in obtaining the principal stresses.

In practice it will be found that, except for very short beams carrying heavy loads, the maximum tensile or compressive stress due to bending moment will be much greater than the maximum shear stress, so that the consideration of stresses due to bending moment is, as a rule, considerably more important than that of the shear stresses.

CASES WHERE ASSUMPTIONS OF THE BEAM THEORY ARE NOT ALLOWABLE.

Moment of Resistance in General Case.—To follow the correct theory of beams it is not necessary to make any of the assumptions previously given, and we will now find the moment of resistance in the most general case. To investigate this, we must suppose that we know by experimental or other means the shape after distortion which is taken up by a cross section of the beam which was originally plane. We must also know the relation between stress and strain for the material of which the beam is composed.

Let A B, Fig. 73, represent the elevation of a cross section of a beam which after bending is strained to the shape D C E. Then from the stress-strain curve and from the shape of the cross section draw a curve of stress D′ C E′. This is obtained as follows: let $a\ b$ be any ordinate of the strain diagram; then from the stress-strain curve find the stress corresponding to this strain, and multiply the stress by the breadth of the beam at the given point, and plot this equal to $a'\ b'$ to some convenient scale; joining up points such as b' we get the stress diagram.

Now let the area of the stress diagrams be Q and T and their centroids G_1 and G_2. Then, of course, in simple bending Q and T will be equal, and if q is the perpendicular distance between

Digitized by Google

the centroids, the moment of resistance will be equal to T × q or Q × q.

If the reader fully follows this general method with regard to the stresses in beams, he should not have the difficulty commonly experienced in following the more particular theories. We shall have further notes and numerical examples on cases of bending, in which the common assumption cannot be made, when dealing with reinforced concrete in Chap. XV.

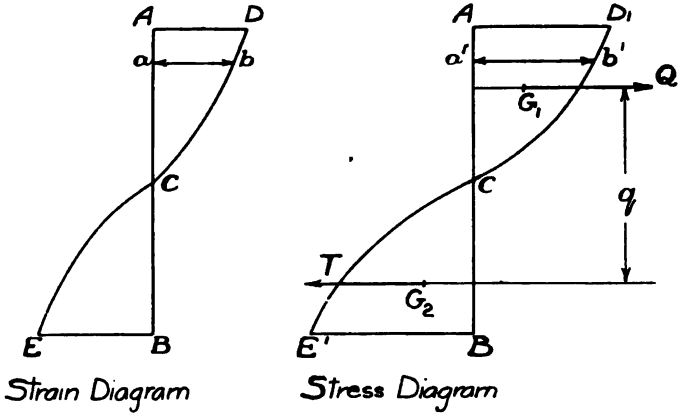

Fig. 73.

* **Beams with appreciable Original Curvature.**—Let A B D E, Fig. 74, represent a short piece of a curved beam, O being the centre of curvature and A E and B D being sections normal to the centre line C C'. Then, obviously, the material at E D will not require the same *total* strain to produce a given unital strain and thus stress as the material in A B will, because its original length is less, and, as a result, the neutral axis will not pass through the centroid.

While still making the assumption that stress and strain are proportional, and also Bernoulli's assumption that a section originally plane remains plane after bending, we can find an accurate theory of bending of curved beams, as follows:

Let the portion A B D E take up the position A_1 B_1 D_1 E_1 after

Digitized by Google

bending. Consider an element of area a situated at a point P at distance y from the centroid line C C_1 and consider a fibre P Q of the material enclosing the area a.

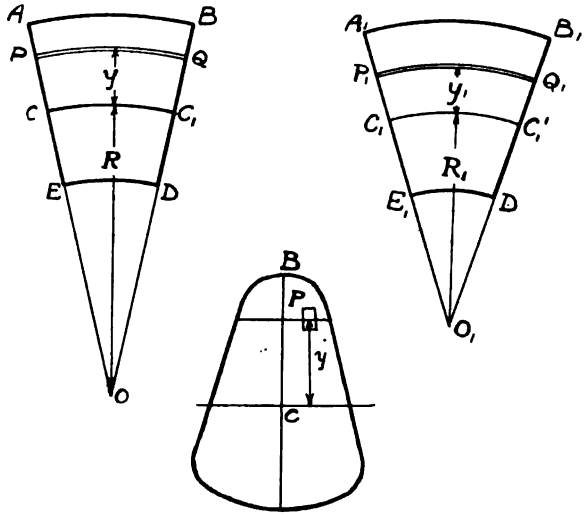

Fig. 74.—Stresses in Curved Beams.

After strain the fibre P Q takes up the position P_1 Q_1 at distance y_1 from the strained centroid line C_1 C_1'.

Then unital strain in P Q $= \dfrac{P_1 Q_1 - P Q}{P Q}$

And if f_y is the stress at the point P

$$\frac{f_y}{E} = \frac{P_1 Q_1 - P Q}{P Q} = \frac{P_1 Q_1}{P Q} - 1$$

$$\therefore \frac{P_1 Q_1}{P Q} = 1 + \frac{f_y}{E} \quad \ldots\ldots\ldots\ldots\ldots\ldots\ldots\ldots\ldots\ldots\ldots\ldots\ldots\ldots (1)$$

Similarly unital strain along C C′ $= \dfrac{C_1 C_1' - C C'}{C C'}$

and if f_o is the stress at the centroid, we get similarly

$$\frac{C_1 C_1'}{C C'} = 1 + \frac{f_o}{E} \quad \ldots\ldots\ldots\ldots\ldots\ldots\ldots\ldots\ldots\ldots\ldots\ldots\ldots\ldots (2)$$

Digitized by Google

Dividing (1) by (2), we get

$$\frac{P_1}{C_1}\frac{Q_1}{C_1'} \times \frac{C}{P}\frac{C'}{Q} = \frac{1 + \frac{f_y}{E}}{1 + \frac{f_o}{E}}$$

But $$\frac{P_1}{C_1}\frac{Q_1}{C_1'} = \frac{y_1 + R_1}{R_1} = 1 + \frac{y_1}{R_1}$$

$$\frac{C}{P}\frac{C_1}{Q} = \frac{R}{y + R} = \frac{1}{1 + \frac{y}{R}}$$

Also since $\frac{f_y}{E}$ and $\frac{f_o}{E}$ are extremely small, we may write

$$\frac{1 + \frac{f_y}{E}}{1 + \frac{f_o}{E}} = \left(1 - \frac{f_o}{E} + \frac{f_y}{E}\right)$$

$\therefore$ We get $$\frac{1 + \frac{y_1}{R_1}}{1 + \frac{y}{R}} = 1 - \frac{f_o}{E} + \frac{f_y}{E} \quad \ldots\ldots (3)$$

$$\therefore \frac{f_o}{E} = \frac{f_y}{E} + 1 - \frac{1 + \frac{y_1}{R_1}}{1 + \frac{y}{R}}$$

$$= \frac{f_y}{E} + \frac{\frac{y}{R} - \frac{y_1}{R_1}}{1 + \frac{y}{R}}$$

$$= \frac{f_y}{E} - \frac{\frac{y_1}{R_1} - \frac{y}{R}}{1 + \frac{y}{R}} \quad \ldots\ldots (4)$$

$$\therefore f_y = f_o + \frac{E\left(\frac{y_1}{R_1} - \frac{y}{R}\right)}{1 + \frac{y}{R}} \quad \ldots\ldots (5)$$

Then the load across the whole cross section is $\Sigma f_y \cdot a$ and in the case of pure bending this is zero.

Digitized by Google

$\therefore$ We have $\Sigma f_y \cdot a = 0$

$$= \Sigma f_0 \cdot a + \Sigma \frac{E\left(\frac{y_1}{R_1} - \frac{y}{R}\right)}{\left(1 + \frac{y}{R}\right)} \cdot a$$

But $\Sigma f_0 a = f_0 \Sigma a = f_0 A$.

$$\therefore f_0 = \frac{-E}{A} \Sigma \frac{\left(\frac{y_1}{R_1} - \frac{y}{R}\right)}{\left(1 + \frac{y}{R}\right)} \cdot a \quad \ldots\ldots\ldots\ldots\ldots\ldots (6)$$

The moment of the force on the given element about $cc' = f_y \cdot a \cdot y$ and the sum of these moments is equal to the moment of resistance and thus equal to the bending moment M.

$\therefore$ We have $M = \Sigma f_y \cdot y \cdot a$

$$= \Sigma f_0 a \cdot y + \Sigma \frac{E\left(\frac{y_1}{R_1} - \frac{y}{R}\right)}{\left(1 + \frac{y}{R}\right)} \cdot a y$$

But $\Sigma f_0 a y = f_0 \Sigma a \cdot y = f_0 \times$ first moment of area about centroid $= f_0 \times 0 = 0$.

$\therefore$ We have:

$$M = \Sigma \frac{E\left(\frac{y_1}{R_1} - \frac{y}{R}\right)}{\left(1 + \frac{y}{R}\right)} \cdot a \cdot y \quad \ldots\ldots\ldots\ldots\ldots\ldots (7)$$

This is the most general case and is true for the assumption given.

Now consider the following special cases:

(1) ORDINARY STRAIGHT BEAM; R INFINITE, R_1 VERY GREAT.

In this case $f_0 = \frac{E}{A} \Sigma \frac{y_1}{R_1} \cdot a$

$$= \frac{E}{R_1 A} \Sigma y_1 a = 0$$

Then $M = \Sigma \frac{E}{R_1} \cdot y_1 y a$

y_1 is practically equal to y,

Digitized by Google

$$\therefore M = \frac{E}{R_1} \Sigma y^2 a$$

$$= \frac{E I}{R_1}$$

and from equation (5) $f_y = o + \frac{E \cdot y_1}{R_1}$

$$= \frac{E \times y}{R_1}$$

$$\therefore \frac{E}{R_1} = \frac{f_y}{y}$$

$$\therefore M = \frac{f_y I}{y}$$

This is the result we have previously obtained.

(2) WINKLER'S FORMULA FOR CHAIN LINKS, &c.---Winkler drew attention to the error of applying the ordinary bending formulæ to chain links, &c., where the original curvature is appreciable, and improved such formulæ as follows:

He takes $y_1 = y$.

Then equation (5) becomes:

$$f_y = f_o + \frac{E \cdot y \left(\frac{1}{R_1} - \frac{1}{R}\right)}{1 + \frac{y}{R}}$$

$$= f_o + E \left(\frac{1}{R_1} - \frac{1}{R}\right) \cdot \frac{y R}{y + R} \quad \ldots\ldots(8)$$

Then from equation (6)

$$f_o = - \frac{E}{A} \left(\frac{1}{R_1} - \frac{1}{R}\right) \Sigma \left(\frac{y R}{y + R}\right) \cdot a$$

$$\text{Now } \Sigma \left(\frac{y R}{y + R}\right) \cdot a = \Sigma y a - \Sigma \left(\frac{y^2}{y + R}\right) \cdot a$$

$$= o - \Sigma \left(\frac{y^2}{y + R}\right) \cdot a$$

$$\text{Now let } A h^2 = \Sigma \left(\frac{R \cdot y^2}{y + R}\right) \cdot a$$

where h is defined by the above relation, and may be called the *link radius*. It corresponds to the radius of gyration in the ordinary case.

Digitized by Google

$$\therefore \text{ We see } \frac{A\,h^2}{R} = \Sigma\left(\frac{y^2}{y+R}\right).a$$

$$= -\Sigma\frac{y\,R}{y+R}.a$$

$$\therefore \Sigma\left(\frac{y}{y+R}\right).a = -\frac{A\,h^2}{R^2}$$

$$\text{Then } f_o = \frac{E}{A}.\left(\frac{1}{R_1}-\frac{1}{R}\right)\frac{A\,h^2}{R}$$

$$\therefore \text{ We have } f_o = \frac{E\,h^2}{R}\left(\frac{1}{R_1}-\frac{1}{R}\right) \quad \ldots\ldots\ldots(9)$$

From equation (7)

$$M = \Sigma\frac{E\left(\frac{1}{R_1}-\frac{1}{R}\right)}{1+\frac{y}{R}}.y^2\,a$$

$$= E\,R\left(\frac{1}{R_1}-\frac{1}{R}\right)\Sigma\frac{y^2\,a}{R+y}$$

$$= E\left(\frac{1}{R_1}-\frac{1}{R}\right)\Sigma\frac{R\,y^2}{R+y}.a$$

$$= E\,A\,h^2\left(\frac{1}{R_1}-\frac{1}{R}\right) \quad \ldots\ldots\ldots(10)$$

$\therefore$ returning to equation (8) we see

$$f_y = E\,h^2\left(\frac{1}{R_1}-\frac{1}{R}\right)+E\left(\frac{1}{R}-\frac{1}{R_1}\right)\frac{y\,R}{y+R}$$

$$= \frac{M}{R.A}+\frac{M\,y}{A\,h^2}.\left(\frac{R}{R+y}\right) \quad \ldots\ldots\ldots(11)$$

RECTANGULAR SECTION.—If the section is rectangular and of depth H and breadth B, we see that analysing mathematically—

$$A\,h^2 = \int_{-\frac{H}{2}}^{+\frac{H}{2}}\frac{R\,y^2}{y+R}.B\,dy$$

$$\int\frac{y^2\,dy}{y+R} = \int y\,dy - \int\frac{y\,R}{y+R}\,dy$$

$$= \int y\,dy - \int R\,dy + \int\frac{R^2\,dy}{y+R}$$

$$= \frac{y^2}{2} - R\,y + R^2\log_e y + R$$

Digitized by Google

$$\therefore A k^2 = \left[\frac{y^2}{2} - R y + R^2 \log_e . y + R\right]_{-\frac{H}{2}}^{+\frac{H}{2}} \times R . B$$

$$= B R \left[0 - R H + R^2 \log_e \frac{2R + H}{2R - H}\right]$$

$$= B R^2 \left[R \log_e \frac{2R + H}{2R - H} - H\right]$$

$$\therefore f_y = \frac{M}{R A} + M . y . \left(\frac{R}{R + y}\right) \times \frac{1}{B R^2 \left[R \log_e \frac{2R + H}{2R - H} - H\right]}$$

$$= \frac{M}{R}\left\{\frac{1}{A} + \frac{y}{B (R + y) (R \log_e \frac{2R - H}{2R + H} - H)}\right\}$$

This is a maximum when $y = \pm \frac{H}{2}$

GENERAL GRAPHICAL SOLUTION.—Let Fig. 75 represent the section A D B E of a beam, and O the centre of curvature of the centre line D E, the beam being, of course, curved in the plane of bending.

Now consider a very narrow strip P Q of the half section at distance y from C D. Join P O, cutting C D in S and draw S R parallel to Q C to cut P Q in R.

$$\text{Then } \frac{P R}{P Q} = \frac{R S}{Q O} = \frac{y}{R + y}$$

Repeating this construction for a number of strips such as P Q, and joining up the points obtained, we get a curve A R D R_1 B called the *link rigidity curve.*

Then the area of this link rigidity curve $= A_L = \Sigma\left(\frac{y}{R + y}\right) . a$

But $$\frac{A k^2}{R^2} = \Sigma\left(\frac{y}{R + y}\right) a$$

$$\therefore A_L = \frac{A k^2}{R^2}$$

Now let $$\frac{A_L}{A} = L \quad i.e., A k^2 = A \times L \times R^2$$

Digitized by Google

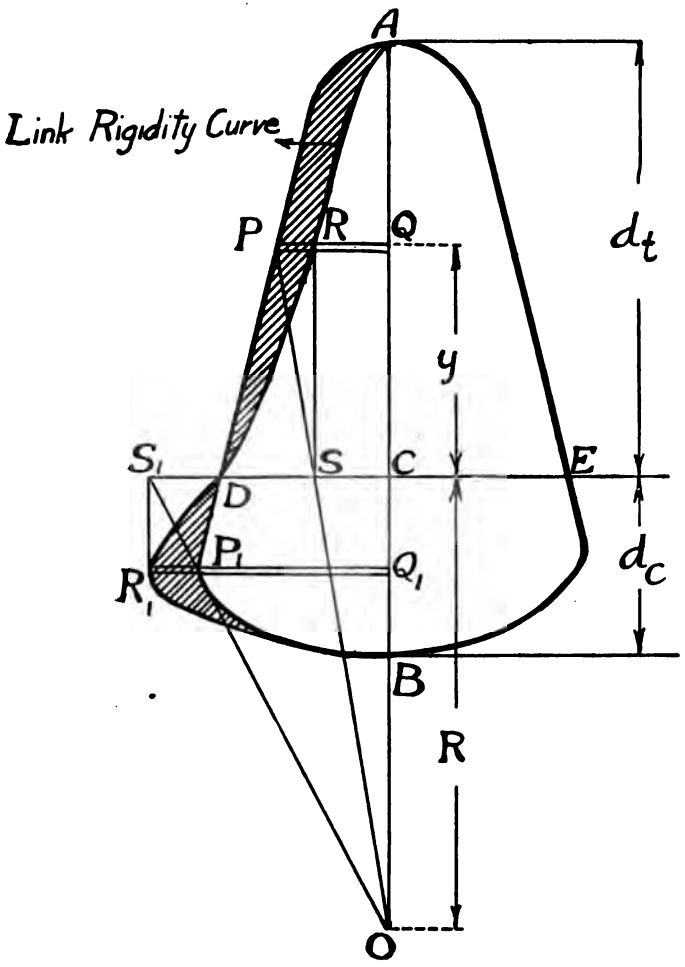

Fig. 75.—Curved Beams, &c.

Digitized by Google

Now put these values in the equation (11) for stress. Then we have

$$f_y = \frac{M}{R.A} + \frac{M y . R}{A . L . R^2 (R + y)}$$

$$= \frac{M}{A}\left\{\frac{1}{R} + \frac{y}{R\,L\,(R + y)}\right\}$$

$$= \frac{M}{A\,R}\left\{1 + \frac{y}{L\,(R + y)}\right\}$$

Then if d_c and d_t are the distances from the line D E to the extreme compression and tension fibres respectively, we have

Maximum compressive stress $= f_c = \frac{M}{A\,R}\left\{1 + \frac{d_c}{L\,(R + d_c)}\right\}$

Maximum tensile stress $= f_t = \frac{M}{A\,R}\left\{\frac{d_t}{L\,(R - d_t)} - 1\right\}$

Position of Neutral Axis.—The value of y to make $f_y = 0$ gives the distance d of the neutral axis from D E.

$$i.e., \quad \frac{y}{L\,(R + y)} = -1$$

$$y = -LR - Ly$$

$$y = -\frac{LR}{1 + L}$$

This enables us to find the position of the neutral axis.

(3) Andrews–Pearson Formula.—In a paper* published by the author and Prof. Karl Pearson, F.R.S., it was pointed out that in Winkler's formula a further correction should be made, because, owing to transverse strain, it is not true that $y = y_1$.

The formulæ in this case become more complicated, but the stresses can be obtained by a graphical method which is not much more troublesome than that in the Winkler method. In the above-mentioned paper it is proved experimentally that the formulæ obtained by this method are much more accurate than the ordinary bending formulæ.

A later paper by Prof. Goodman, M.I.C.E.,† confirms the results of these experiments, and obtains results almost identical

* *A Theory of Stresses in Crane and Coupling Hooks.* Drapers' Company Research Memoirs. Technical Series, I. (Dulau & Co., Lond.)

† 'Maximum Stresses in Crane Hooks.' Vol. CLXVII. (1906–7) *Proc. Inst. C.E.*

Digitized by Google

with those obtained by the Andrews–Pearson experiments. The reader should consult these papers if he wishes to study the problem, as our present space forbids us entering into further detail.

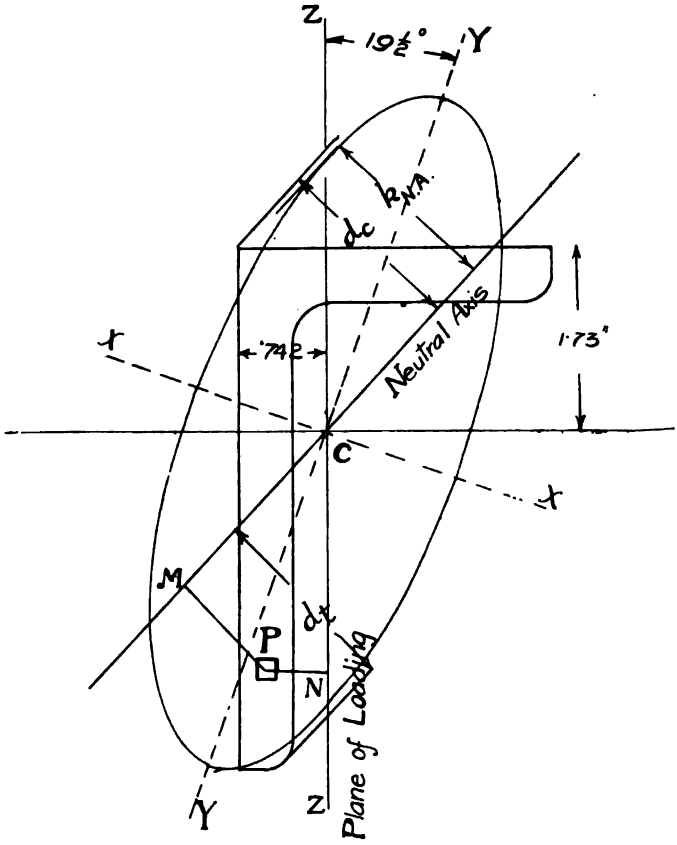

Fig. 76.—Stresses in Asymmetrical Sections.

*** Beams with Loading inclined to Principal Axis.**—In obtaining our formulæ for the stresses in beams, we assumed that 'the section of the beam is symmetrical about an axis through

Digitized by Google

the centroid of the cross section parallel to the plane in which bending occurs.'

We saw in dealing with moments of inertia, or second moments, that an axis of symmetry is called a principal axis of the section. Our assumption, therefore, is equivalent to saying that one of the principal axes lies in the plane of loading of the beam.

When such is not the case we proceed as follows. Draw the momental ellipse for the beam, X X and Y Y (Fig. 76) being the principal axes, and let Z Z be the trace of the plane of loading. *Then the neutral axis will be the diameter of the ellipse conjugate to the plane of loading. The plane of bending will be at right angles to the neutral axis.*

This is proved as follows:

Consider an element of area at the point P of a section (Fig. 76), and let P M and P N be drawn perpendicular to the plane of loading and neutral axis respectively. Then the intensity of stress at P is proportional to P N, the distance from the neutral axis, so that if c is a constant we may write $f_p = c \times PN$.

∴ The moment of the load over the area about Z Z is equal to $f_p \times a \times PM = c \times a \times PM \times PN$.

Now since Z Z is the plane of loading, the moment of all the stresses over the section about Z Z must be zero, since the couple to the stresses must also be in plane Z Z.

$$\therefore \Sigma f_p \times a \times PM = 0$$

$$i.e., \quad \Sigma c \times a \times PM \times PN = 0$$

$$i.e., \quad \Sigma a \,.\, PM \times PN = 0$$

but $\Sigma a \,.\, PM \,.\, PN$ is what we have previously called the *product moment*, and it can be shown that if the product moment of an area about two lines is equal to zero, such lines must be conjugate diameters of an ellipse.

Therefore to find the neutral axis draw a chord the diameter conjugate to Z Z. To do this draw a chord parallel to Z Z and bisect it and join C to the point of bisection.

Now suppose the radius of gyration about the N.A. is $k_{N.A.}$, and d_c and d_t are the distances from the extreme points of the section to the compression and tension sides respectively.

Digitized by Google

Then the moduli are

$$Z_c = \frac{A k_{N.A.}^2}{d_c} = \frac{I_{N.A.}}{d_c}$$

$$Z_t = \frac{A k_{N.A.}^2}{d_t} = \frac{I_{N.A.}}{d_t}$$

Then the maximum compression and tension stresses are obtained by the relations

$$f_c = \frac{M}{Z_c}$$

$$f_t = \frac{M}{Z_t}$$

NUMERICAL EXAMPLE.—*A* 5″ × 3″ × ½″ *unequal angle section is loaded on the small side with the long leg downward. Find the safe bending moment for a stress of* 7 *tons per square inch.*

From the tables of standard sections we see that for this section the maximum and minimum values of the radius of gyration being 1·69 and ·65 inches, the principal axes being at 19½° to the vertical line z z, which is the trace of the plane of loading.

The momental ellipse is now drawn (to twice the scale in Fig. 76). The major axis being equal to twice k_{xx}, and the minor axis equal to twice k_{yy}.

By the construction previously given we get the diameter of the ellipse conjugate to z z. This gives the neutral axis. To obtain $k_{N.A.}$ draw a tangent to the ellipse parallel to the N.A. and draw a line from C perpendicular to this axis. This will be found to be ·88 inch. Now measure the distance d_c d_t from the neutral axis to the extreme fibres of the section and these will be found to be 1·80 and 1·83 inches respectively. The area of the section is 3·75 sq. ins. Therefore we see

$$Z_c = \frac{3{\cdot}75 \times {\cdot}88^2}{1{\cdot}80} = 1{\cdot}61 \text{ inch units}$$

$$Z_t = \frac{3{\cdot}75 \times {\cdot}88^2}{1{\cdot}83} = 1{\cdot}59 \text{ inch units}$$

∴ If safe stress $= f_c = f_t = 7$ tons per square inch

safe B.M. $= 7 \times 1{\cdot}59 =$ 11·13 inch tons .....(1)

If we had taken the N.A. at right angles to the plane of loading, as in the case of a symmetrical beam, we should have had $k = 1{\cdot}60$, $d_c = 1{\cdot}73$, and $d_t = 3{\cdot}27$.

Digitized by Google

This would give $Z_c = \frac{3{\cdot}75 \times 1{\cdot}60^2}{1{\cdot}73} = 5{\cdot}46$ inch units

$$Z_t = \frac{3{\cdot}75 \times 1{\cdot}60^2}{3{\cdot}27} = 2{\cdot}94 \text{ inch units}$$

$\therefore$ Safe B.M. $= 7 \times 2{\cdot}94 = \underline{20{\cdot}58 \text{ inch tons}}$ .....(2)

(In finding the safe B.M. we, of course, consider only the least modulus if the working stresses are the same in tension and compression.)

We see from comparing results (1) and (2) that a very large error is made by failing to find the true neutral axis. This error is very commonly made by practical designers.

A similar allowance should be made for symmetrical sections where one of the principal axes does not coincide with the plane of loading.

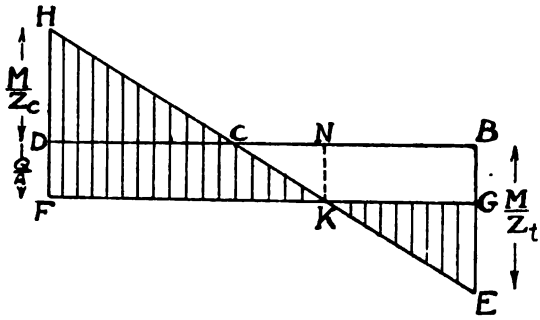

Fig. 77.—Combined Bending and Direct Stress.

Such cases occur in practice in plate girders where the wind is blowing on one side while the load is crossing, and in sloping bridges where the cross girders are placed with their flanges at the same inclination as the main girders.

Combined Bending and Direct Stresses.—If the loading on a beam is such as to cause a direct stress in addition to bending stresses, then the resultant stresses across the section will be obtained by adding together the separate stresses. Let B D, Fig. 77, represent the elevation of a section of a beam, C being the centroid of the section whose area is A and whose compression and tensile moduli are Z_c and Z_t, D being the compression side and B the tension side.

Digitized by Google

Then, if the direct force is a thrust Q, there will be a uniform compression stress of $\frac{Q}{A}$ over the section. If the bending moment is equal to M, the maximum compression and tensile stresses due to bending are equal respectively to $\frac{M}{Z_c}$ and $\frac{M}{Z_t}$. Therefore we have :—

$$\text{Resultant maximum compressive stress} = f_c = \frac{Q}{A} + \frac{M}{Z_c} \quad \ldots(1)$$

$$\text{Resultant maximum tensile stress} = f_t = \frac{M}{Z_t} - \frac{Q}{A} \quad \ldots(2)$$

The distribution of the combined stresses across the section is then as shown in Fig. 77, F H represent the maximum com-

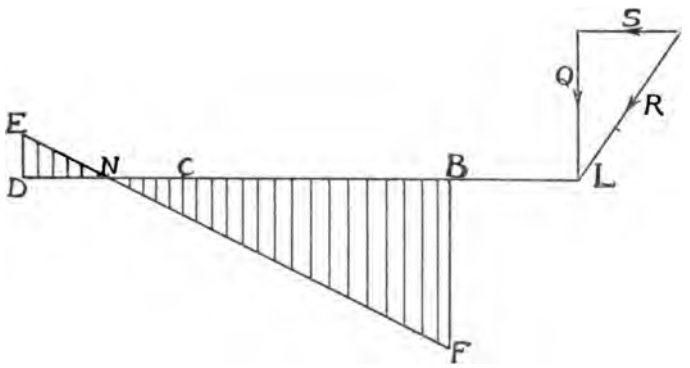

Fig. 78.

pressive stress, and G E the maximum tensile stress. The neutral axis then is at the point N, where the stress is zero.

If the direct force is a pull T instead of a thrust Q, we have

$$\text{Resultant maximum tensile stress} = f_t = \frac{T}{A} + \frac{M}{Z_t} \quad \ldots(3)$$

$$\text{Resultant maximum compressive stress} = f_c = \frac{M}{Z_c} - \frac{T}{A} \quad \ldots(4)$$

Stresses obtained from Line of Pressure.—If the resultant force across the cross section is R, Fig. 78, and the line of pressure cuts D B produced in L, the *load point* (see p. 139), then

Digitized by Google

resolving R along and perpendicular to the cross section we get a shearing force S and a thrust Q.

In this case $M = Q \times C L = Q \times x$

and if $C D = d_c$ and $C B = d_t$

we have $$Z_c = \frac{I}{d_c} = \frac{A k^2}{d_c}$$

$$Z_t = \frac{I}{d_t} = \frac{A k^2}{d_t}$$

where k is the radius of gyration about a line through the centroid parallel to the neutral axis.

$\therefore$ We have from equations (1) and (2)

$$f_c = \frac{Q}{A} + \frac{Q \cdot x + d_c}{A k^2}$$

$$= \frac{Q}{A}\left(1 + \frac{x d_c}{k^2}\right) \quad \ldots\ldots (5)$$

$$f_t = \frac{Q \cdot x + d_t}{A k^2} - \frac{Q}{A}$$

$$= \frac{Q}{A}\left(\frac{x d_t}{k^2} - 1\right) \quad \ldots\ldots (6)$$

Or if the resultant normal component is a pull T, equations (3) and (4) become

$$f_t = \frac{T}{A}\left(1 + \frac{x d_t}{k^2}\right) \quad \ldots\ldots (7)$$

$$f_c = \frac{T}{A}\left(\frac{x d_c}{k^2} - 1\right) \quad \ldots\ldots (8)$$

Position of the Neutral Axis.—The position of the neutral axis N can be found as follows:—

Let it be at distance y from C.

Then stress due to bending $= \frac{M y}{I}$

$$= \frac{Q \cdot x y}{A k^2}$$

At this point the stress due to bending is exactly equal to the direct stress

$$\therefore \frac{Q \cdot x y}{A k^2} = \frac{Q}{A}$$

or $$x y = k^2$$

i.e. $$y = \frac{k^2}{x} \quad \ldots\ldots (9)$$

Digitized by Google

The following numerical examples will make the question of combined direct and bending stresses clear; further examples will occur in the course of the book.

NUMERICAL EXAMPLES.—(1) *A tension rod is a flat bar* 8 *inches wide and* 1 *inch thick: owing to bad fitting the line of pull, instead of passing along the geometrical axis of the bar, lies* $\frac{1}{4}$ *of an inch to one side of it, in the plane which bisects the thickness of the rod. Determine the maximum and minimum stresses set up in this bar in a section at right angles to the line of pull when the pull is* 36 *tons.*

Show by a sketch the actual distribution of the stress across the section. (*B.Sc. Lond. 1904.*)

In this case the direct stress $= \frac{T}{A} = \frac{36}{8 \times 1} = 4{\cdot}5$ tons per sq. in.

The B.M. is equal to $T \times x$, and the second moment is equal to $\frac{1 \times 8^3}{12} = \frac{128}{3}$

$$\therefore \quad k^2 = \frac{I}{A} = \frac{128}{3} \times \frac{1}{8} = \frac{16}{3}$$

$$\therefore \quad f_t = \frac{T}{A}\left(1 + \frac{x d_t}{k^2}\right)$$

$$= 4{\cdot}5\left(1 + \frac{1}{4} \times 4 \times \frac{3}{16}\right)$$

$$= 4{\cdot}5 \times 1\frac{3}{16} = 5{\cdot}344 \text{ tons per sq. in.}$$

$$f_c = \frac{T}{A}\left(\frac{x d_c}{k^2} - 1\right)$$

$$= 4{\cdot}5\left(\frac{3}{16} - 1\right)$$

$$= -4{\cdot}5 \times \frac{13}{16} = -3{\cdot}656 \text{ tons per sq. in.}$$

The distribution of the stress is then as shown in Fig. 79.

(2) *A hollow circular column has a projecting bracket on which a load of* 1 *ton rests. The centre of this load is* 2 *feet from the centre of the column. External diameter of column is* 10 *inches, and thickness* 1 *inch. What is the maximum compression stress.* (*A.M.I.C.E. Oct. 1905.*)

In this case $A = \frac{\pi}{4}\left(10^2 - 8^2\right) = 28{\cdot}28$

$$I = \frac{\pi}{64}\left(10^4 - 8^4\right) = 289{\cdot}8 \text{ inch units}$$

Digitized by Google

$$\therefore \quad k^2 = \frac{289{\cdot}8}{28{\cdot}28} = 10{\cdot}25$$

$$\therefore \quad f_c = \frac{Q}{A}\left(1 + \frac{x\,d_c}{k^2}\right)$$

$$= \frac{1}{28{\cdot}28}\left(1 + \frac{24 \times 5}{10{\cdot}25}\right)$$

$$= \frac{12{\cdot}7}{28{\cdot}28} = {\cdot}448 \text{ tons per sq. in.}$$

$$f_t = \frac{Q}{A}\left(\frac{x\,d_t}{k^2} - 1\right)$$

$$= \frac{10{\cdot}7}{28{\cdot}28} = {\cdot}379 \text{ tons per sq. in.}$$

The distance of the N.A. from the centre of the section is then given by $y = \frac{k^2}{x}$

$$= \frac{10{\cdot}25}{24} = {\cdot}427 \text{ in.}$$

The distribution of stresses is then as shown in Fig. 79.

(3) *A built-up crane jib is in the form of a curved girder, and a horizontal section near the base is a hollow rectangle. The outside dimensions of this rectangle are* 54 *and* 36 *inches, and the larger and shorter sides are* 1 *inch and* 2 *inches thick respectively. Find the maximum tensile and compressive stresses induced in the material when a load of* 25 *tons is suspended from the end of the crane, the horizontal distance of the load from the centre of the section being* 50 *feet. Show by a sketch how the intensity of stress varies across the section.* (*B.Sc. Lond. 1905.*)

It will be noted that in this question no means are given to connect the plates of the rectangle, such means being necessary in practice.

Proceeding as in the previous example, we see that

$$A = 2\,(72) + 1\,(100) = 244 \text{ sq. ins.}$$

$$I = \frac{36 \times 54^3}{12} - \frac{34 \times 50^3}{12} = 118{,}200$$

$$\therefore \quad k^2 = \frac{118{,}200}{244} = 484{\cdot}5$$

$$\therefore \quad f_c = \frac{25}{244}\left(1 + \frac{600 \times 27}{484{\cdot}5}\right)$$

$$= \frac{25}{244} \times 34{\cdot}5 = 3{\cdot}62 \text{ tons per sq. in.}$$

$$f_t = \frac{25}{244}\left(\frac{600 \times 27}{484{\cdot}5} - 1\right) = 3{\cdot}33 \text{ tons per sq. in.}$$

Fig. 79 shows the manner in which the stresses are distributed.

Digitized by Google

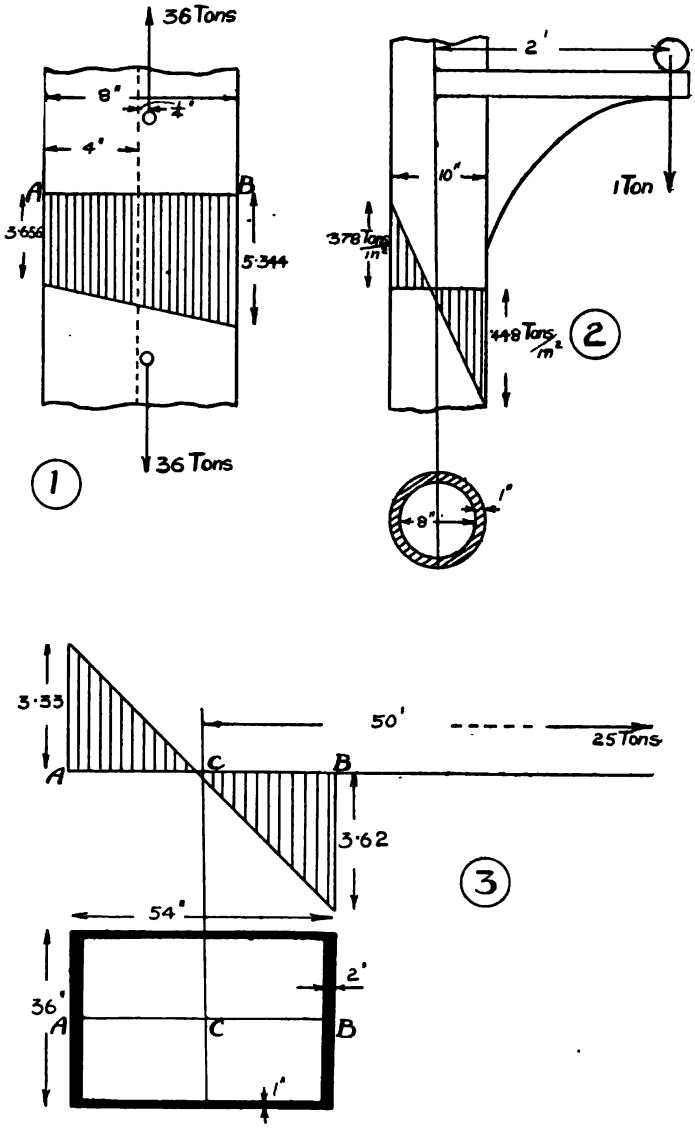

Fig. 79.—Combined Bending and Direct Stress.

Digitized by Google

Approximate Value of Modulus of I Sections.—In practice girders are usually made of I section, because the most economical section is that in which as much as possible of the metal is placed in the edges or flanges. In this case an approximate formula for the modulus of the section can be found as follows: Let D (Fig. 80) be the distance between the centre of

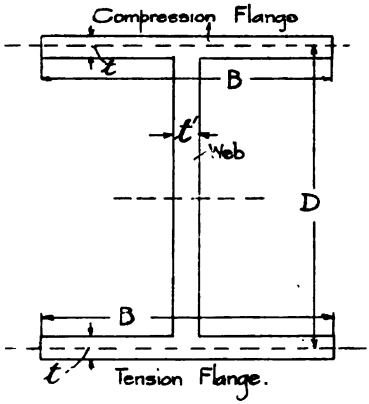

Fig. 80.

flanges of the section, the thickness of the flanges being t. Then if B is the breadth of the flanges, and t_1 the thickness of the web, we have

$$I = \frac{B(D+t)^3}{12} - \frac{(B-t_1)(D-t)^3}{12} \quad \ldots\ldots(1)$$

$$\therefore 12I = B(D^3 + 3D^2t + 3Dt^2 + t^3) - (B-t_1)(D^3 - 3D^2t + 3Dt^2 - t^3)$$
$$= B(6D^2t + t^3) + t_1(D^3 - 3D^2t + 3Dt^2 - t^3)$$

$$\therefore \frac{12I}{D^2} = 6Bt\left(1 + \frac{t^2}{6D^2}\right) + t_1\left(D - 3t + \frac{3t^2}{D} - \frac{t^3}{D^2}\right) \ldots\ldots(2)$$

Now if t is small compared with D, $\frac{t^2}{D^2}$ and $\frac{t^3}{D^3}$ are negligible,

$$\therefore \frac{12I}{D^2} = 6Bt + t_1D\left(1 - \frac{3t}{D}\right) \quad \ldots\ldots(3)$$

$$\text{or } I = \frac{D^2}{12}\left\{6Bt + t_1D\left(1 - \frac{3t}{D}\right)\right\}$$

Digitized by Google

$$\text{Now } Z = \frac{I}{\frac{D+t}{2}} = \frac{2I}{D+t} = \frac{2I}{D\left(1+\frac{t}{D}\right)} = \frac{2I}{D}\left(1-\frac{t}{D}\right) \text{ nearly}$$

since t is small compared with D.

$$\therefore \quad Z = \frac{D^2}{6D}\left\{6Bt + t_1 D\left(1-\frac{3t}{D}\right)\right\}\left(1-\frac{D}{t}\right)$$

$$= \frac{D}{6}\left\{6Bt - \frac{6Bt_2}{D} + t_1 D - 3tt_1 - tt_1 + 3t_1\frac{t^2}{D^2}\right\} \ldots(4)$$

$$= \frac{D}{6}\left\{6Bt + t_1(D-t)\right\} \quad \text{to a first approximation,}$$

neglecting all remaining terms containing t^2 or tt_1.

Now $B \times t$ = area of one flange = A

and $t_1(D-t)$ = area of the web = a

$$\therefore \quad Z = DA + \frac{aD}{6}$$

$$= D\left(A + \frac{a}{6}\right) \ldots\ldots\ldots\ldots\ldots\ldots\ldots(5)$$

Therefore we get the following rule: *The modulus of an* I *section beam is approximately equal to the depth between the centres of the flanges multiplied by the area of one flange plus one-sixth of the area of the web.*

In English practice the web is usually neglected altogether in obtaining the modulus, in which case we have $Z = A \times D$.

We shall have numerical examples of these approximate rules, and will show to what extent they are correct when dealing with the design of plate and box girders.

Discrepancies between Theoretical and Actual Strengths of Beams.—Many practical men have expressed considerable surprise that in testing beams the actual and theoretical breaking strengths do not agree. A number of beams are tested, and a tension test is also made from the same material, and it is found that the load which, on the ordinary bending theory should cause the breaking stress in the beam, does not cause fracture, the amount of additional load depending on the shape of the cross section. This was the origin of the old 'beam paradox,' it

Digitized by Google

being thought that the material must be stronger in bending than in tension. In fact, for cast-iron beams, an old erroneous theory which, for a rectangular beam, made $M = \frac{f \times b\,h^2}{4}$ instead of $f \times \frac{b\,h^2}{6}$ agrees considerably better with the breaking test than the correct theory.

Now this discrepancy is due to the fact that the ordinary bending theory is not applicable to breaking stresses, and no one, who appreciated the value of the assumptions made in obtaining such theory, would expect the theoretical and actual breaking strengths to agree. This is because the stress is not proportional to strain after the elastic limit is reached.

Some experimenters who have measured the deflections of beams have stated that for mild steel the stresses at the elastic limit do not agree, but that is due to a confusion between the elastic limit and the yield point, and to the fact that the deflections were not measured with sufficient accuracy. In Chapter I. we saw that for a tension test of mild steel the elastic limit and yield point were quite close to each other; but in bending this is not the case, the yield point occurring at a considerably later point than the elastic limit. Considerable error, therefore, arises if the yield point in bending be taken instead of the elastic limit. If the latter be carefully measured it will be found that the stresses in tension and bending at the elastic limit agree very closely. This point is proved, incidentally, in the Andrews-Pearson paper on Stresses in Crane Hooks, referred to on p. 164. The reason for the yield point coming some distance after the elastic limit in bending is that only the material at the extreme edges has been stressed up to the yield point, and the whole section will not yield until the material nearer the centre has become stressed up to the yield point.

We see, therefore, that there is no discrepancy between theory and tests so long as the conditions laid down in formulating the theory are fulfilled. If those conditions do not hold beyond a certain point, then, after that point, we must get a new theory if we wish to calculate the stresses.

These so-called discrepancies between theoretical and actual

Digitized by Google

strengths of beams point to the desirability of choosing the working stresses in terms of the stress at the elastic limit, and not of the breaking stress—as we pointed out in Chapter II.—because if the working stress in a beam is, say, one-half of the stress at the elastic limit in tension, then twice the load on the beam will cause the elastic limit in the beam; if, however, the working stress be taken as one-fourth of the breaking stress in tension, four times the load will not cause failure, the exact load to do this being more, and depending on the shape of the section.

Digitized by Google

CHAPTER VII.

BENDING MOMENTS AND SHEARING FORCES FOR ROLLING LOADS.

In Chapter V. we considered the variation in the bending moment and shearing force for different points along the span for various kinds of fixed loads. If a system of loading travels across a beam so that each of the loads at different times occupies every possible position on the span, such load system is called a *rolling load system*.

Now the B.M. and shear at each section of the beam changes as the load crosses. We do not attempt to determine the B.M. at shear at each section of the beam for every position of the load, but find only the greatest value that they can have at any point during the transit. Thus the B.M. and shear diagrams for rolling loads do not give the values of these quantities which occur at the same time, but give, at each section, the *maximum* possible value of the quantities whatever the position of the load may be.

We will consider only simply supported beams. Cantilevers are seldom subjected to rolling loads, and when they are the maximum shear and B.M. occur when the load is right at the free end.

Consider the following standard cases :—

(1) **Single Isolated Load.**—Let an isolated load W, Fig. 81 (1), be crossing a beam A B of span l from left to right.

SHEAR DIAGRAM.—Let the load be at a point P, at distance y from B, and let it be approaching a point C at distance x from B.

Then shear at C $= S_c = R_a = \frac{W(l-y)}{l}$

$$= W - \frac{Wy}{l}$$

This is greatest when y is least, so that we see that the shear

Digitized by Google

increases as the load approaches C, the maximum value occurring when C is reached, such value being $\frac{W(l-x)}{l}$.

Now let the load be at a point P′ beyond C at a distance z from B.

Then $S_c = R_B - W$

$$= W\frac{(l-z)}{l} - W$$

$$= -\frac{W z}{l}.$$

This has a maximum numerical value when z has its maximum possible value, *i.e.*, when $z = x$. Therefore we see that as the load approaches C, the shear at C increases until C is reached; it then changes over to a maximum negative value directly C is passed, and then diminishes as the load goes on.

Maximum positive shear at C $= \frac{W(l-x)}{l}$. This is proportional to the distance of C from A, and so the diagram of maximum shear for the load approaching is a straight line A_1 F, F B_1 being equal to W.

Maximum negative shear at C $= \frac{-W x}{l}$. This is proportional to the distance of C from B, and so the diagram of maximum shear for the load receding is a straight line B_1 D, A_1 D being equal to W.

These diagrams are used as follows:—Take any point M along the line A_1 B, and let vertical through M cut the shear diagram in Q and R. Then M Q is the maximum positive shear at M and M R the maximum negative shear at M, the *range* being equal to Q R.

Bending Moment Diagram.—B. M. at C for load approaching $= M_c = R_B \times x$.

This is a maximum when R_B is a maximum, *i.e.*, when load is at C.

For load receding $M_c = R_B \cdot x - W(x - z)$

$$= \frac{W(l-z)}{l} \cdot x - W(x-z)$$

$$= W z - \frac{W \cdot z}{l} = W z\left(1 - \frac{x}{l}\right)$$

This is a maximum when z is a maximum and will always be positive because x must be $< l$ so that $\left(1 - \frac{x}{l}\right)$ cannot be negative.

Digitized by Google

When $z = x$, $M_c = W x \left(1 - \frac{x}{l}\right) = \frac{W(l-x) \cdot x}{l}$

$= R_B \times x$

Therefore we see that the B.M. increases until the point C is reached, and then diminishes gradually as the load recedes from C.

The maximum value of $M_c = W x - \frac{W x^2}{l}$

This depends on x^2, and so the maximum B.M. diagram will be a parabola, the maximum ordinate occurring at the centre, and being equal to $\frac{W l}{2} - \frac{W\left(\frac{l}{2}\right)^2}{l} = \frac{W l}{4}$

The B.M. diagram is then as shown at A_2 E B_2 on Fig. 81 (1).

If the load is crossing from right to left, the diagrams will be the same, because the shear and B.M. at C when the load is approaching and has reached the point P will be the same as when the load is receding and has reached the same point.

(2) **Uniform Load Longer than the Span.**—Let a uniform load larger than the span and of intensity p tons per foot run cross a beam A B of span l from left to right, see Fig. 81 (2).

SHEAR DIAGRAM.—Consider a point C at distance x from A and let the front of the load have reached a point P at distance y from A.

Then $S_c = R_B = \frac{p y^2}{2 l}$

This increases with y so that the maximum shear occurs when the front of the load reaches C.

Now let the front of the load have passed C by a distance z.

Then $S_c = R_B - p \cdot z$

$$= \frac{p(x+z)^2}{2l} - pz$$

$$= p\left\{\frac{x^2 + 2xz + z^2}{2l} - z\right\}$$

$$= p\left\{\frac{x^2}{2l} + \frac{2xz}{2l} + \frac{z^2}{2l} - z\right\}$$

$$= \frac{p x^2}{2l} - pz\left(1 - \frac{z}{2l} - \frac{x}{l}\right)$$

Digitized by Google

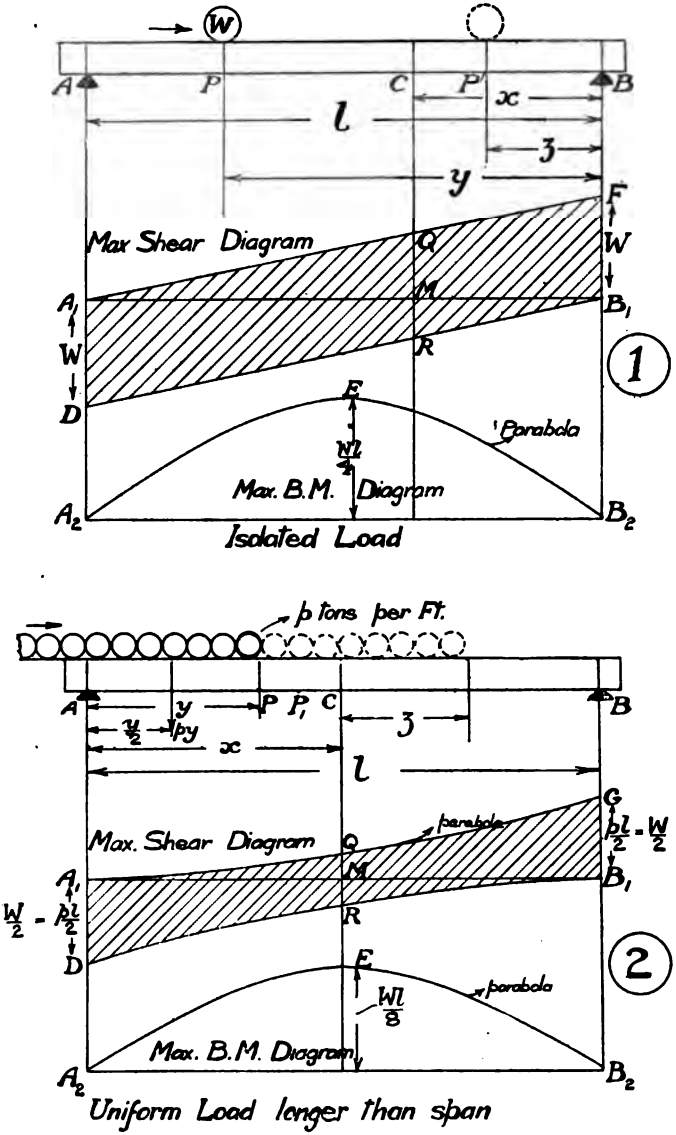

Fig. 81.—Rolling Loads.

Digitized by Google

Now $\left(1 - \frac{z}{2l} - \frac{x}{l}\right)$ will be positive if $2l > z + 2x$, because it is equal to $\frac{2l - (z + 2x)}{2l}$

This must always be so, because l cannot be $< x + z$, and so $2l$ must be $> 2x + z$.

$\therefore$ S_c will decrease as z increases, so that the maximum value of the shear occurs when z is nothing, or when the front of the load is just over the given point.

The maximum negative shear at C will occur just when the tail of the load leaves C, because the load is then in the same position as if we were approaching the point from the other side.

Therefore maximum positive shear at C $= \frac{p y^2}{2l}$

" negative " $= \frac{p (l-y)^2}{2l}$

The curves of maximum shear are thus parabolas, the parabolas having vertices at A_1 and B_1, and the ordinates at the end being equal to $\frac{pl}{2} = \frac{W}{2}$

Then, as before, if M is any point along the span, M Q and M R give respectively the maximum positive and negative shears at M, and Q R gives the range of the shear.

BENDING MOMENT DIAGRAM. —When the front of the load has reached P, $M_c = R_B (l - x)$. If the load comes on a little farther to a point P_1, the value of R_B will increase, and thus the B.M. increases as the load comes further on. This also applies to a point such as P, which is already covered, because $M_P = R_A . y - \frac{p y^2}{2}$ and R_A will increase as the load comes further on the span.

$\therefore$ B.M. at every point is a maximum when the whole span is covered, so that the maximum B.M. curve is a parabola of maximum ordinate $\frac{p l^2}{8} = \frac{W l}{8}$

* (3) **Uniform Load Shorter than Span.**—Let a uniform load of length l and intensity p tons per foot run cross a beam A B of span L from left to right (see Fig. 82).

SHEAR DIAGRAM.—It follows from exactly the same reasoning

Digitized by Google

given in the previous case that the maximum positive shear at any point occurs when the front of the load reaches the point, and the maximum negative shear occurs when the tail leaves the point.

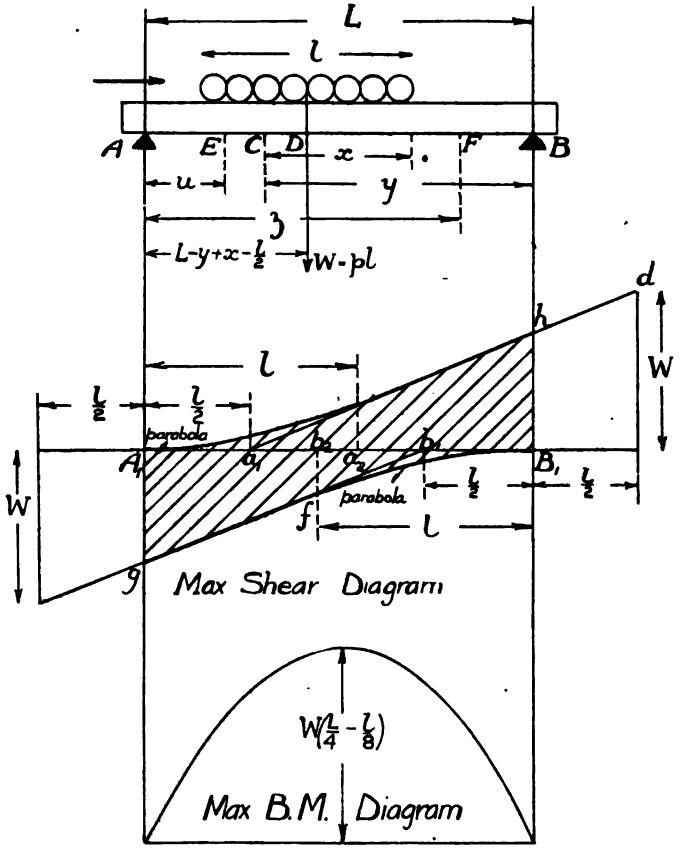

Fig. 82.—Uniform Rolling Load Shorter than Span.

Now consider a point E at distance u from A, where u is less than l. The maximum positive value of S_E occurs when the front of the load reaches it, and its value is then equal to $\frac{p\,u^2}{2\,l}$. This is

Digitized by Google

the same as in the previous case, because at E the whole load has not come on to the span. Thus we see that the shear diagram will be a parabola up to a point at distance l from A.

Next take a point F at distance z from A, z being $> l$.

The maximum value of $S_F = R_B = \frac{p l}{L}\left(z - \frac{l}{2}\right) = \frac{W}{L}\left(z - \frac{l}{2}\right)$

where W is the total load.

$$\therefore S_B = \frac{W}{L}\left(L - \frac{l}{2}\right) = W\left(1 - \frac{l}{2L}\right)$$

Now S_F depends on the first power of z only, and so the shear diagram for points beyond the end of the load from A will be a straight line.

To find the point where this straight line, if produced, would cut the line $A_1 B_1$ we find the value z must have to make S_F zero,

i.e., $z = \frac{l}{2}$

From these results we get the following rules for drawing the curves of maximum shear :—

On either side of the points A_1 B_1 take points a, a_1; b, b_1 at distances $\frac{l}{2}$ from A_1 B_1, and points a_2 b_2 along the span at distances l from A_1 B_1.

Set up a vertical $b\,d$ to represent W, and set down a vertical $a\,c$, also to represent W, and join $c\,b_1$ and $d\,a_1$. Let them cut the verticals through a_2 and b_2 in e and f, then through e draw a parabola with vertex at A_1, and through f draw a parabola with vertex at B_1, then $h\,e$ A_1 and $g\,f$ B_1 are the curves of maximum shear, and they are used as explained in the former two cases.

BENDING MOMENT DIAGRAM.—Suppose the centre of the load has reached a point D, the front of the load then being at a distance x from a point C on the beam at distance y from B.

Then $R_B = \frac{p l}{L} \cdot AD = \frac{p l}{L}\left(L - y + x - \frac{l}{2}\right)$

Bending moment at C $= M_c = R_B \cdot y - \frac{p x^2}{2}$

$$= \frac{p l y}{L}\left(L - y + x - \frac{l}{2}\right) - \frac{p x^2}{2} \quad \ldots\ldots(1)$$

Digitized by Google

This will be a maximum when $\frac{d\,M_c}{d\,x} = 0$

i.e., when $\frac{p\,l\,y}{L} - p\,x = 0$

i.e., $x = \frac{l\,y}{L}$

or $\frac{x}{l} = \frac{y}{L}$

Therefore we get the following rule:—*The B.M. at any point is a maximum when the load is in such a position that the given point divides the load in the same ratio as it divides the span.*

∴ Putting this relation in our value (1) for M_c we get maximum value of $M_c = \frac{p\,l\,y}{L}\left\{L - y + \frac{l\,y}{L} - \frac{l}{2}\right\} - \frac{p\,l^2\,y^2}{2\,L^2}$

$$= \frac{p\,l\,y}{L}\left\{L - y + \frac{l\,y}{2\,L} - \frac{l}{2}\right\}$$

$$= \frac{W\,y}{L}\left(L - y\right)\left(1 - \frac{l}{2\,L}\right)$$

This depends on y^2, and so the maximum B.M. diagram will be a parabola.

The maximum ordinate of this parabola will occur when $y = \frac{L}{2}$ and will be equal to

$$\frac{W\,L}{2\,L}\left(\frac{L}{2}\right)\left(1 - \frac{l}{2\,L}\right) = \frac{W\,L}{4}\left(1 - \frac{l}{2\,L}\right)$$

$$= \frac{W\,L}{4} - \frac{W\,l}{8}$$

It is interesting to note that if $l = 0$, the shear and B.M. diagrams curve the same as in Case (1), and if $l = L$ we get the same result as in Case (2).

*(4) **Two Isolated Loads at a Fixed Distance apart.**—Let two isolated loads W_1 and W_2 at distance l apart cross a span A B (Fig. 83). Then the resultant load P will be equal to $W_1 + W_2$, and will act at distances a and b from the loads, a and b being determined by the relation $\frac{W_1}{W_2} = \frac{b}{a}$

Digitized by Google

SHEAR DIAGRAM.—Consider a point C at distance y from A. Then if the front load has not reached C and P is at distance x from A

$$S_c = \frac{P.x}{L}$$

This increases with x, and so S_c increases up to the value

$$S_c = \frac{P(y - b)}{L} \quad \ldots\ldots\ldots\ldots\ldots\ldots\ldots\ldots\ldots\ldots (1)$$

Now let the load have reached such a position that C is between W_2 and P, and let the first load be a distance c beyond C.

Then $S_c = R_B - W_2$

$$= \frac{P(y + c - b)}{L} - W_2$$

This increases as c increases and is a maximum when $c = b$. In this case

$$S_c = \frac{P\,y}{L} - W_2 \quad \ldots\ldots\ldots\ldots\ldots\ldots\ldots\ldots\ldots\ldots (2)$$

This will be greater than the value in result (1)

$$\text{if} \quad W_2 < \frac{P\,b}{L}$$

$$i.e., \text{ if} \quad \frac{L}{b} < \frac{P}{W_2}$$

$$i.e., \text{ if} \quad \frac{L}{b} < 1 + \frac{W_1}{W_2}$$

Therefore, we see that our investigation divides into two cases.

If $\frac{L}{b} < 1 + \frac{W_1}{W_2}$ then the maximum shear at C occurs when P reaches C; if $\frac{L}{b} > 1 + \frac{W_1}{W_2}$ then the maximum shear occurs when the first load reaches C. As in practice $\frac{L}{b}$ will nearly always be $> 1 + \frac{W_1}{W_2}$ we will limit our consideration to this case.

$\therefore$ Maximum value of $S_c = \frac{P(y - b)}{L}$

Digitized by Google

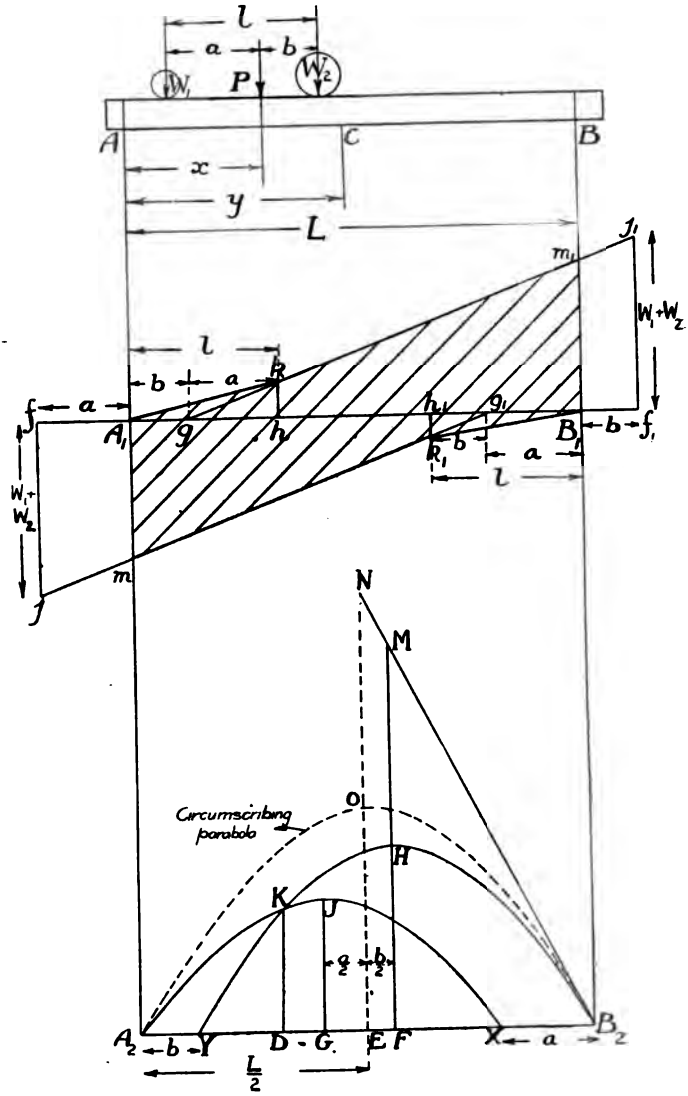

Fig. 83.—Two Isolated Rolling Loads at fixed distance apart.

Digitized by Google

Now let the load have reached such a position that C is between P and W_1 and let P be a distance d beyond C.

Then $S_c = R_B - W_2$

$$= \frac{P(y + d)}{L} - W_2$$

This increases as d increases, and so the maximum value occurs when $d = a$.

$$i.e., \quad S_c = \frac{P(y + a)}{L} - W_2 \quad \ldots\ldots\ldots\ldots\ldots\ldots\ldots\ldots (3)$$

Now let the load W_1 have gone beyond the point C by a distance e.

Then $S_c = R_B - P$

$$= \frac{P(y + a + e)}{L} - P$$

$$= \frac{-P}{L}[L - (y + a + e)]$$

This is always negative, and it will have its maximum numerical value when $e = 0$.

Then $S_c = \frac{-P}{L}[L - (y + a)]$ . . . . . (4)

From results (2) and (4), we see that the maximum shears at C are linear functions of y and so the diagrams of shear will be straight lines; but it must be remembered that near A and B up to a distance l from these points only one load is on the span at a time. The maximum shear diagrams are then obtained, as follows:

Take points f, g outside and inside the span and at distances respectively equal to a and b from A_1 and take corresponding points $f_1 g_1$ at distances respectively equal to b and a from B_1. Set down $f j$ equal to $W_1 + W_2 = P$, and set up $f_1 j_1$ equal to the same quantity, and join $j_1 g$ and $j g_1$.

Then take points h, h_1 along the span at distances equal to l from A_1 and B_1 and let verticals through h, h_1 cut $j_1 g$ and $j g_1$ in k, k_1 and join $A_1 k$, $B_1 k_1$. Then if $j_1 g$ and $j g_1$ cut the verticals through B_1 and A_1 in m_1 and m, the curves of maximum shear are $A_1 k m_1$ and $B_1 k_1 m$.

BENDING MOMENT DIAGRAMS.—Consider the cases that we

Digitized by Google

dealt with for the shear. If the first load is approaching C and is at distance x from A.

$$M_c = \frac{P(x - b)}{L}(L - y)$$

This increases as x increases and has a maximum value

$$= \frac{P(y - b)(L - y)}{L} \quad \ldots\ldots\ldots\ldots\ldots\ldots (5)$$

Now take the load such that C is between W_2 and P and let W_2 be a distance c beyond C.

Then $M_c = R_B(L - y) - W_2 . c.$

$$= \frac{P(y + c - b)(L - y)}{L} - W_2 c \ldots\ldots\ldots\ldots\ldots (6)$$

This increases with c if $\frac{W_1}{P} > \frac{y}{L}$ and decreases with c if $\frac{W_1}{P} < \frac{y}{L}$

Now, let the load be such that C is between P and W_1 and let P be a distance d beyond C.

Then $M_c = R_B(L - y) - W_2(b + d)$

$$= \frac{P(y + d)}{L}(L - y) - W_2(b + d) \ldots\ldots\ldots\ldots\ldots (7)$$

This increases or decreases in the same way as (6).

Lastly, consider the load W_1 to have gone beyond the point C by a distance e.

Then $M_c = R_B - P(a + e)$

$$= \frac{P(y + a + e)(L - y)}{L} - P(a + e)$$

$$= \frac{Py(L - y)}{L} + \frac{P(a + e)(L - y)}{L} - P(a + e)$$

$$= \frac{Py(L - y)}{L} - \frac{P(a + e)y}{L}$$

This decreases as a increases, and so the maximum value of the B.M. comes when $e = 0$.

$$M_c = \frac{Py(L - y)}{L} - \frac{Pay}{L}$$

$$= \frac{Py(L - y - a)}{L} \quad \ldots\ldots\ldots\ldots\ldots\ldots\ldots\ldots (8)$$

Digitized by Google

From equation (5) for the load W_2 above C

$$M_c = \frac{P\,(y - b)\,(L - y)}{L}$$

$$= \frac{P\,y\,(L - y)}{L} - \frac{P\,b\,(L - y)}{L}$$

$\therefore$ (5) or (8) will be a maximum according as

$\frac{P\,a\,y}{L}$ is greater than, equal to, or less than $\frac{P\,b\,(L - y)}{L}$

i.e., $a\,y$ " " " " $b\,(L - y)$

i.e., $y\,(a + b)$ " " " " $b\,L$

i.e., $\frac{y}{L}$ " " " " $\frac{b}{a + b}$

i.e., $\frac{y}{L}$ " " " " $\frac{W_1}{P}$

Thus from results (5) to (8) we see that if $\frac{y}{L}$ is greater than $\frac{W_1}{P}$, the maximum B.M. at the point occurs when W_2 is above the point, but if $\frac{y}{L}$ is less than $\frac{W_1}{P}$, the maximum B.M. occurs when W_1 is over the point.

Let D be such a point that $\frac{A_2\,D}{A_2\,B_2} = \frac{W_1}{P}$. Then for any point between A_2 and D, the maximum B.M. occurs when W_1 is over the point, and between D and B_2 when W_2 is over the point.

We see that the curves representing equations (5) and (8) are parabolas, and we therefore proceed to draw the B.M. curves as follows :

Consider first the parabola of equation (5).

It has zero value for $y = b$ and maximum value for $y = \frac{L}{2} + \frac{b}{2}$ the maximum B.M. then coming

$$\frac{P}{L}\left(\frac{L}{2} - \frac{b}{2}\right)^2 = \frac{P}{4\,L}(L - b)^2$$

Therefore take a point V at distance b from A_2 and a point F at distance $\frac{b}{2}$ to the right of E the mid-point of the span. Set up F H

Digitized by Google

on a convenient scale equal to $\frac{P}{4L}(L - b)^2$ and draw a parabola Y H B_2 with vertex at H.

Now consider the parabola of equation (8).

It has zero value for $y = L - a$ and maximum value for $y = \frac{L}{2} - \frac{a}{2}$, the maximum B.M. then coming

$$\frac{P\left(\frac{L}{2} - \frac{a}{2}\right)}{L}\left(L - \frac{L}{2} + \frac{a}{2} - a\right) = \frac{P\left(\frac{L}{2} - \frac{a}{2}\right)^2}{L} = \frac{P}{4L}(L - a)^2.$$

Therefore take a point X at distance a from B_2 and a point G at distance $\frac{a}{2}$ to the left of E, and set up G J $= \frac{P}{4L}(L - a)^2$, and draw a parabola A_2 J X with vertex at J.

The two parabolas meet at K, and the curve of maximum B.M.s is therefore given by the curve A_2 K H B_2.

EQUIVALENT UNIFORM LOAD—CIRCUMSCRIBING PARABOLA.—In the design of girders it is customary to express the maximum B.M. due to rolling loads in terms of an equivalent fixed uniform load. This is done by finding a parabola which will just enclose the maximum B.M. diagram for the rolling load. In this case we proceed as follows: Draw a tangent B.M. to the larger parabola by making H M = H J and joining B_2 M. Produce this to meet the vertical through E in N and take E O $= \frac{1}{2}$ E N. Then the parabola A_2 O B_2 with vertex at O gives the circumscribing parabola.

Let W be the uniform load equivalent to the given load system.

$$\text{Then} \quad \text{O E} = \frac{W L}{8}$$

$$\text{or} \quad W = \frac{8 \times \text{O E}}{L}$$

In the case when two equal loads cross the girder we proceed exactly as in the present case, but of course $a = b$, the two halves of the parabola then coming exactly alike.

$$\text{In this case F H} = \frac{P}{4L}\left(L - \frac{l}{2}\right)^2$$

$$\therefore \text{O E} = \frac{\text{H F} \times \frac{L}{2}}{\left(\frac{L}{2} - \frac{l}{2}\right)} = \frac{\text{H F} \times L}{L - l}$$

Digitized by Google

$$\therefore \text{OE} = \frac{\text{P}}{4\,\text{L}}\,\frac{\left(\text{L} - \frac{l}{2}\right)^2}{\text{L} - l}\,.\,\text{L}$$

$$\text{W} = \frac{8\,.\,\text{P}}{4\,\text{L}^2}\,\frac{\left(\text{L} - \frac{l}{2}\right)^2}{(\text{L} - l)}\,.\,\text{L} = \frac{2\,\text{P}\left(\text{L} - \frac{l}{2}\right)^2}{\text{L}\,(\text{L} - l)}$$

(5) **General Cases of Rolling Loads.**—When a system of isolated loads, such as those due to the axle loads of locomotives, crosses a span, the shear and bending moment at every point vary as the load crosses and the maximum values of these quantities have to be determined by some method such as given below. It is usual in practice for a railway company to choose a standard axle loading, based on their design of locomotives, and with a percentage allowance varying from $2\frac{1}{2}$ to 10 per cent. for possible increases. The curves of maximum shear and bending moment are then obtained graphically, and parabolas are drawn to enclose them, the equivalent uniform load being obtained from these parobolas. The results are tabulated or put into the form of a curve, and the bridges are designed for a uniform load, the intensity of which for the given span is obtained from the table or curve. We shall give some figures showing such tables in the chapter on the Design of Girders (Chap. XVIII.).

The diagrams in this problem become very complicated, and so we will restrict our load system to one of five loads, 0, 1 ; 1, 2 ; 2, 3 ; 3, 4 ; 4, 5 ; Fig. 84. The procedure with a more complicated loading is exactly the same, and is as follows: Set out the load system at the top of the paper, and choose the scale so that there is on both sides of the load a length at least equal to the span under consideration. Now set down the loads on a vector line 0, 5 and choosing a convenient pole P draw the link polygon *u*, *a*, *b*, *c*, *d*, *e*, *v*. The pole P is best chosen so that the centre portion of the link polygon comes at the bottom of the paper, and the first and last links *u a*, *e v* produced indefinitely, cut the span just before the edges of the paper. Now let the span under consideration be of length L, and let $A_0 B_0$ represent one position of the span relatively to the load system; then if verticals through A_0 and B_0 be drawn to cut the link polygon in $x_0 y_0$, and $x_0 y_0$ be joined, $x_0\ a\ b\ y_0$ is the B.M. diagram for the given position of the load on

Digitized by Google

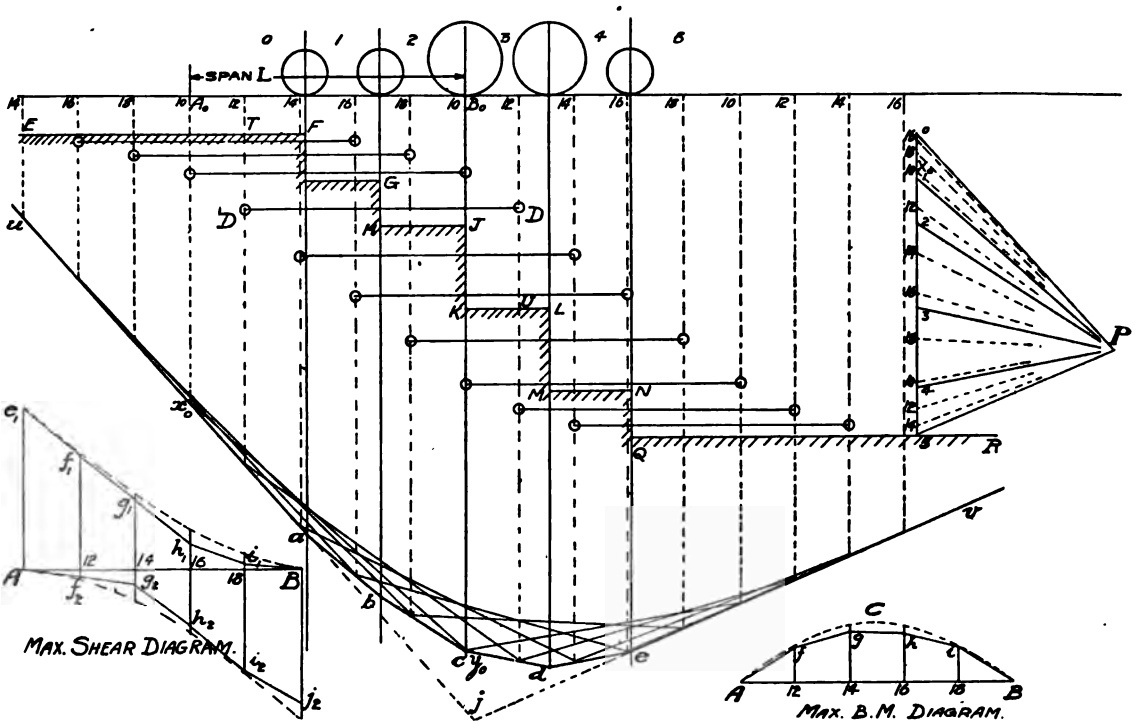

Fig. 84.—General Case of Rolling Loads.

Digitized by Google

the span, and if P X_0 is drawn parallel to $x_0 y_0$, X_0 gives the base line for the shear diagram. The B.M. and shear are then measured at a number of points along the span, and the load is then moved relatively to the span, and fresh B.M. and shear diagrams drawn, and the values at the given points measured, and so on. It is much more convenient for drawing to move the span under the load than to move the load over the span, because in the former case only one link polygon need be drawn. The procedure is then as follows:

BENDING MOMENT.—Divide the span into a convenient number of equal parts: in practice 10 will usually be sufficient, but we will adopt 5 to avoid confusion of the figure. Then starting from one or other of the larger loads set off lengths representing these span segments right across the paper, and draw verticals through the points thus obtained, such verticals being shown dotted in the figure. If these verticals are numbered as indicated in the figure, then a horizontal line joining successive verticals of the same number gives the span. The closing lines giving the B.M. diagrams for each position of the load are then drawn. A length A B to represent the span L is next taken and divided up into the given number of parts. By scaling off from the diagrams to the scale obtained as previously described, the maximum B.M. at each section of the span is found and is plotted up on the line A B; 12, *f* being the maximum ordinate for position 12, and so on. A, *f*, *g*, *h*, *i*, B then gives the curve of maximum bending moment, and if it is desired to express the results in terms of an equivalent uniform load, a parabola A C B is then drawn to enclose the curve. The maximum or central ordinate then represents $\frac{p}{8} L^2$, where p represents the equivalent uniform load per ft. run, and from which p is calculated.

If the number of divisions of the span is large enough it will not matter where the first position is taken.

If the value of the maximum B.M. anywhere across the section is required we make use of the following rule: *The maximum B.M. will occur under one of the heavy loads, and the maximum B.M. under any load occurs when the centre of gravity of the load system and the given load are equidistant from the centre of the span.*

Digitized by Google

This is proved as follows: It is obvious that the B.M. at any point of the span is a maximum when one of the loads is over it; this is clearly seen from the funicular polygon. Now let the total weight of the load system be W, and let its centre of gravity be at distance x from the end A, and let the given load be w at distance y from the centre of gravity.

Then the B.M. under the load W is equal to

$$M = R_A.(x+y) - W.y$$

$$= W\frac{(L-x)}{L}(x+y) - Wy = W\left\{x - \frac{x(x+y)}{L}\right\}$$

This is a maximum when $\frac{dM}{dx} = 0$

$$i.e., \text{ when } 1 - \frac{2x}{L} - \frac{y}{L} = 0$$

$$i.e., x = \frac{L-y}{2}$$

i.e., when W and w are equidistant from the centre.

The centre of gravity of the load system is *j*, the point where the first and last links meet, so that the maximum B.M. can be found by placing the centre of the span half-way between *j* and the loads 2, 3 and 3, 4 and seeing which gives the greater B.M.

The reason why this procedure alone would not be sufficient is that although it finds the actual maximum B.M. at one or two points, it does not find the maximum values at the other points of the span.

SHEAR.—To draw the curve of maximum shears we proceed as before, by first setting out the load and drawing the link polygon. The points on the vector polygon are then projected across their corresponding spaces and the stepped shear curve outline E F G H J K L M N Q R is drawn in as shown on Fig. 84. This may be done on the same sheet as the bending moment as shown, but may, if desired, be done separately. The dotted verticals through the span segments then determine the various closing lines of the B.M. diagrams for the various positions. Now, through P draw lines, shown dotted, P 10, P 12, P 14, &c., parallel to *each* of these closing lines, then these points, 10, 12, 14, &c, determine the base

Digitized by Google

lines for shear. If the load is much larger than the span, these lines need be drawn only from the point where the first load comes on to the span, until the point where the first heavy load has gone right across the span, and also to get the negative shears from the point where the last heavy load comes on to the span to the point where the last load leaves it. Now project the points 10, 12, &c., across their corresponding spans, and the various shear diagrams are those obtained between these base lines and the stepped shear curve outline.

Take, for example, the base line D D. Then D T F G H J K U D is the shear curve for this position of the load.

The maximum positive and negative shears at the different span segments are then measured off and are plotted on a base A B. The points e_1 f_1, &c, and f_2 g_2, &c., are then joined up to get the curves of maximum shear, and if the equivalent uniform load is required, a parabola is drawn, as shown dotted, to enclose them.

NOTE ON DRAWING.—In practice the best method of procedure is to draw the link polygon carefully on a large sheet of paper, and to draw the verticals, representing the span segments, on tracing paper. The various B.M. and shear diagrams can then be traced through, and in many cases need not be actually drawn, and the maximum at every point measured and plotted on the curves of maximum shear and B.M. In this way one link polygon does for a number of spans.

It should be noted that the forms of the maximum shear and B.M. diagrams will be different if ten sections are taken instead of five as in the figure.

For more detailed information on these constructions, the reader may consult some articles by Mr. H. Bamford, M.Sc., A.M.I.C.E., in Vol. LXXXII. of *Engineering*, 1905; and a paper by J. Graham, M.I.C.E., Vol. CLVIII., *Proc. Inst. C.E.*

(5) Combined Diagrams for Rolling Load and Dead Load.—In practice there is always the dead load, due to the weight of the structure, to be combined with the rolling load to get the resultant stresses. The relative values of the dead and rolling loads increase as the span increases, and with very large

Digitized by Google

spans the dead load stresses are often larger than those due to the rolling load.

We will consider the case of a uniform rolling load of p tons per ft. run larger than the girder, combined with a uniformly distributed load W, the span of the girder being l.

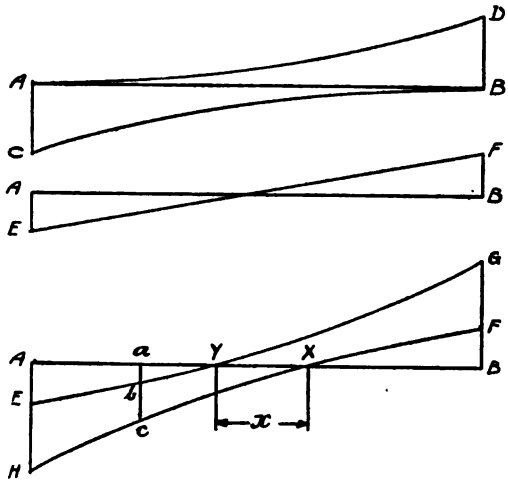

Fig. 85.—*Combined Rolling and Dead Load.*

SHEAR DIAGRAMS.—As we have already seen, the maximum shear diagram for the rolling load is given by two parabolas C B, A D, Fig. 85. The diagram for the dead load is given by the sloping straight line E F.

On combining these we get the curves G Y E and F X H, E A and B F being equal to $\frac{W}{2}$, and H A and G B being equal to $\frac{W}{2} + \frac{p\,l}{2}$.

If a point a between Y and B along the span is considered, the shear at a is always negative, the minimum value being $a\,b$ and the maximum value $a\,c$.

Between the points X and Y the shear changes in sign as the load crosses, and some writers have called X Y = x the *focal*

Digitized by Google

length of the girder. As we shall see later, if the girder is a framework, counterbracing will be necessary between X and Y if it is desired to prevent reversal of stress in the diagonals.

In the case of framed girders, the maximum shear diagrams for rolling loads are somewhat different from the case of the ordinary beam which we have considered, and we shall deal with this point in the chapter on Framed Structures. We shall also deal further with the application of the rolling load diagrams to the design of girders in Chapter XVIII.

Digitized by Google

CHAPTER VIII.

DEFLECTIONS OF BEAMS.

We have found the relation which exists between the stresses in a beam, and the bending moment; we now want to find the relation between the deflections and the bending moment.

Let C C′, Fig. 86, represent a *short* length of the centroid line of a beam, the original curvature of which was negligible, and which has become bent to a radius of curvature R. This radius R is that which agrees with the very short length C C′, and is not

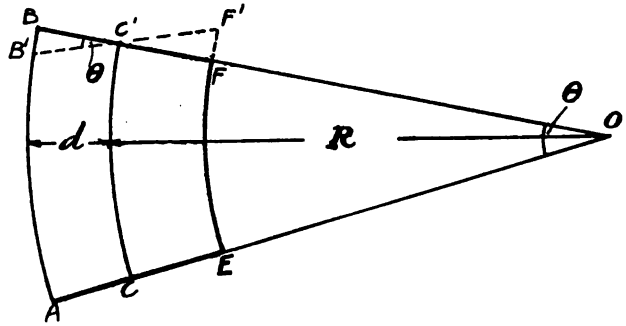

Fig. 86.

the same all along the beam. If the assumptions that we previously made with regard to the stresses in beams still hold, B F and A E are straight lines after bending, and they meet at O, the centre of curvature of C C′. Draw B′ F′ parallel to A E. Now consider the segments B B′ C′ and C C′ O.

Since θ is very small $\frac{B\ B'}{B'\ C'} = \frac{C\ C'}{C\ O}$

$$\text{or } \frac{B\ B'}{C\ C'} = \frac{B'\ C'}{C\ O} = \frac{d}{R} \quad \ldots\ldots\ldots\ldots\ldots\ldots\ldots\ldots\ldots\ldots (1)$$

Digitized by Google

But A B′ represents the length of A B before bending occurs

$$\therefore \frac{B\,B'}{A\,B'} = \frac{\text{increase in length}}{\text{original length}} = \text{strain in A B}$$

But A B′ = C C′

∴ We have $\frac{B\,B'}{C\,C'}$ = strain in A B = $\frac{f}{E}$, where f is the stress along A B.

∴ Putting this in equation (1) we have:

$$\frac{f}{E} = \frac{d}{R}$$

$$\text{or } \frac{f}{d} = \frac{E}{R} \quad \ldots\ldots\ldots\ldots\ldots\ldots\ldots\ldots\ldots\ldots (2)$$

But we have already shown that:

$$M = \frac{f\,I}{d}$$

$$\text{or } \frac{f}{d} = \frac{M}{I}$$

∴ combining these results we have

$$\frac{f}{d} = \frac{M}{I} = \frac{E}{R} \quad \ldots\ldots\ldots\ldots\ldots\ldots\ldots\ldots\ldots\ldots (3)$$

This is the complete relation between the stresses in beams, the bending moment, and the radius of curvature. In practice we do not so much want to know the radius of curvature at various points of a beam, but we require the deflection, and so we will next find the relation between radius of curvature and deflection, and then find the deflections for various kinds of loading.

Our investigation now divides itself into two parts according as we consider it from the graphical or the mathematical standpoint, and we will deal with it in this order.

INVESTIGATION FROM GRAPHICAL STANDPOINT.*

Preliminary Note on Curvature.—Let A B (Fig. 86*a*) represent any curve, and let P P_1 be points on it at a short distance s apart. Draw tangents P Q, P_1Q_1 to meet any base line making

* The reader may take either the mathematical or the graphical reasoning. Each is complete in itself.

Digitized by Google

angles θ and θ_1 with it, and draw lines perpendicular to the tangents, then the point of intersection of these perpendiculars is the centre of curvature of the short arc P P_1.

Then the angle subtended by P P_1 at the centre will be equal to $(\theta - \theta_1)$.

$\therefore$ if R is the radius of curvature $R \times (\theta - \theta_1) = s$.

$$\therefore \quad R = \frac{s}{\theta - \theta_1}$$

$$\text{or} \quad \frac{\theta - \theta_1}{s} = \frac{1}{R}$$

Then $\frac{1}{R}$ is called the *curvature at the given point*, or rather the curvature is the value which $\frac{\theta - \theta_1}{s}$ approaches as s gets smaller and smaller.

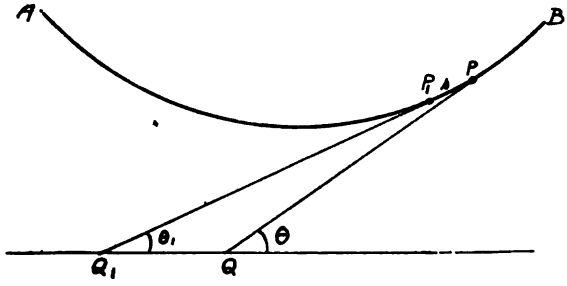

Fig. 86a.

Mohr's Theorem.—Now imagine A B to be a cable loaded vertically in any manner, and let the load between the points P, P_1 be equal to w. Then it follows from the laws of graphic statics that the cable takes up the shape of the link polygon, for the load system on it drawn with a polar distance equal to the horizontal pull in the cable. (*See* p. 358.)

A

Now let the tension in the cable at the points P, P_1 be T, T_1. Then the horizontal components of these tensions must be equal, since there is no horizontal force on the cable; let this horizontal component be H; the difference between the vertical components of the tensions must be equal to w, the load between the points.

Digitized by Google

$\therefore$ We have $\quad H = T \cos\theta = T_1 \cos\theta_1$

$$w = T_1 \sin\theta_1 - T \sin\theta$$

i.e., $$w = \frac{H \sin\theta_1}{\cos\theta_1} - \frac{H \sin\theta}{\cos\theta}$$

$$= H(\tan\theta_1 - \tan\theta)$$

Now if θ_1 and θ are small, as they will be when considering beams, we may say $\tan\theta_1 = \theta_1$ and $\tan\theta = \theta$

$\therefore$ We have $\quad w = H(\theta_1 - \theta)$

$$\therefore \quad \frac{w}{s} = \frac{H(\theta_1 - \theta)}{s}$$

$$= \frac{H}{R}$$

But $\frac{w}{s}$ = load per unit length of the cable = say p.

$$\therefore \quad p = \frac{H}{R}$$

$$\text{or} \quad \frac{1}{R} = \frac{p}{H} \qquad \ldots\ldots(4)$$

Now return to the case of the beam.

From equation (3) $\quad \frac{1}{R} = \frac{M}{EI} \qquad \ldots\ldots(5)$

The quantity E × I depends solely on the shape and material of the beam, and is called the *flexural rigidity*. Then if this flexural rigidity is constant throughout the span, by comparing statement **A** and equations (4) and (5) we see that: *A loaded beam takes up the same shape as an imaginary cable of the same span which is loaded with the bending moment curve on the beam, and subjected to a horizontal pull equal to the flexural rigidity (E I).*

This is **Mohr's Theorem**, and the deflected form of the beam is called the *elastic line* of the beam. We see, therefore, that to obtain the elastic line of a beam our procedure is as follows:

(1) Draw the bending moment curve for the beam.

(2) Divide this curve up into narrow vertical strips, and set down mid-ordinates on a vector line, and take a polar distance equal to the flexural rigidity (E I).

Digitized by Google

(3) Draw the link polygon for this vector polygon, and reduce it to a horizontal base, then this link polygon gives the elastic line to a scale which we shall determine later.

For the present we will assume that the section of the beam is uniform along its length, or rather that the flexural rigidity is constant. We shall see later how to proceed when such is not the case.

Standard Cases of Deflections. — In certain special cases we can calculate the maximum deflections by reasoning based on Mohr's Theorem, and we will deal with such cases now (Fig. 87).

(1) SIMPLY SUPPORTED BEAM WITH CENTRAL LOAD W.—Let A B represent a simply supported beam of span l with a central load W.

Then A D B is the B.M. diagram, the maximum ordinate being equal to $\frac{W l}{4}$. Let $A_1C_1B_1$ be the elastic line of the beam; then, according to Mohr's Theorem, the shape of this elastic line is the same as that of an imaginary cable of the same span loaded with the B.M. curve and subjected to a horizontal pull equal to the flexural rigidity.

Now consider the stability of one half of this cable. It is kept in equilibrium by three forces: the horizontal pull H at the point C_1; the resultant load P on half the cable; and the tension T at the point A_1.

Take moments about the point A_1, then we have:

$$H \times \delta = P \times y$$

$$\therefore \delta = \frac{P \times y}{H}$$

In this case P = area of one-half of B.M. diagram

$$= \frac{1}{2} \cdot \frac{l}{2} \times \frac{W l}{4} = \frac{W l^2}{16}$$

y = distance of centroid of shaded triangle from A

$$= \frac{l}{3}$$

$$H = E I$$

$$\therefore \delta = \frac{W l^2}{16} \times \frac{l}{3 . E I} = \frac{W l^3}{48 E I}$$

Digitized by Google

(2) SIMPLY SUPPORTED BEAM WITH UNIFORM LOAD.—Let A B represent a simply supported beam of span l, with a uniformly distributed load W.

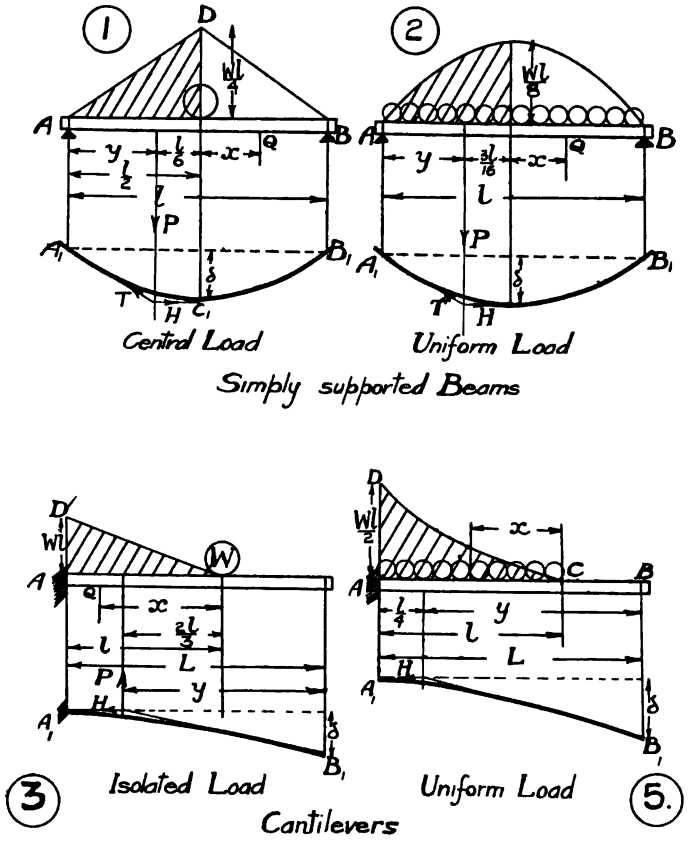

Fig. 87.—Deflections of Beams.

Then the B.M. diagram is a parabola, the height being equal to $\frac{W l}{8}$. Then considering the stability of half the imaginary cable, we have as before

$$\delta = \frac{P \times y}{H}$$

Digitized by Google

In this case P = area of one-half of B.M. diagram.

$$= \frac{1}{2} \cdot \frac{2}{3} l \times \frac{W l}{8} = \frac{W l^2}{24}$$

$$y = \frac{5 l}{16}$$

$$H = E I$$

$$\therefore \delta = \frac{W l^2}{24} \cdot \frac{5 l}{16 E I} = \frac{5}{384} \frac{W l^3}{E I}$$

(3) CANTILEVER WITH AN ISOLATED LOAD NOT AT FREE END.—Let a cantilever of span L carrying a load W at a point at distance l from the fixed end A.

Then the B.M. diagram is a triangle, A D being equal to $W l$, $A_1 B_1$ represents the elastic line of the beam and the imaginary cable. In this case we must imagine the load as acting upwards.

The cable is horizontal at A_1.

Take moments round B_1, then we have as before

$$H \times \delta = P \times y$$

$$\therefore \delta = \frac{P \times y}{H}$$

In this case P = area of B.M. curve A C D

$$= \frac{W l . l}{2} = \frac{W l^2}{2}$$

$$y = L - \frac{l}{3}$$

$$H = E I$$

$$\therefore \delta = \frac{W l^2}{2 E I} \left(L - \frac{l}{3} \right)$$

In this case it should be noted that the portion C B of the beam is straight.

(4) CANTILEVER WITH AN ISOLATED LOAD AT FREE END.—This is the same as the previous case when $l = L$

$$\therefore \delta = \frac{W l^2}{2 E I} \left(L - \frac{L}{3} \right)$$

$$= \frac{W L^3}{3 E I}$$

Digitized by Google

(5) CANTILEVER WITH UNIFORM LOAD FROM FIXED END TO A POINT BEFORE THE FREE END.—Let A B be a cantilever on span L, and let a load W be uniformly distributed from A to a point C, l being the length of A C.

Then as before:

$$\delta = \frac{P y}{H}$$

In this case P = area of B.M. curve A C D

$$= \frac{1}{3} \cdot \frac{W l}{2} \cdot l = \frac{W l^2}{6}$$

$$y = L - \frac{l}{4}$$

$$H = E I$$

$$\therefore \delta = \frac{W l^2}{6 E I}\left(L - \frac{l}{4}\right)$$

(6) CANTILEVER WITH UNIFORM LOAD OVER WHOLE LENGTH.—This is the same as the previous case when $l = L$.

$$\therefore \delta = \frac{W L^2}{6 E I}\left(L - \frac{L}{4}\right)$$

$$= \frac{W L^2}{6 E I} \cdot \frac{3 L}{4} = \frac{W L^3}{8 E I}$$

* (7) SIMPLY SUPPORTED BEAM WITH ISOLATED LOAD ANYWHERE.—The reasoning in this case is somewhat long, but should not otherwise present any great difficulties.

The first important point to notice is that the maximum deflection will not occur under the load, so that, as it is the maximum deflection that we nearly always require, it is of very little use to find the deflection directly under the load as is commonly done.

We have seen that the ordinate of the bending moment curve or link polygon of a beam is a maximum where the shear is zero, so that treating the B.M. curve as a load on the beam, the deflection will be a maximum where the shear due to this load is zero.

Let a load W be placed at a point C on a beam A B of span l, Fig. 88, C being at distances a, b from A and B. Then A E B is

Digitized by Google

the B.M. diagram, C E being equal to $\frac{W\,a\,b}{l}$. The total load represented by this B.M. diagram treated as a load will be equal to the area of the Δ A E B $= \frac{W\,a\,b}{l} \times \frac{l}{2} = \frac{W\,a\,b}{2}$.

It acts at the centroid G of the Δ.

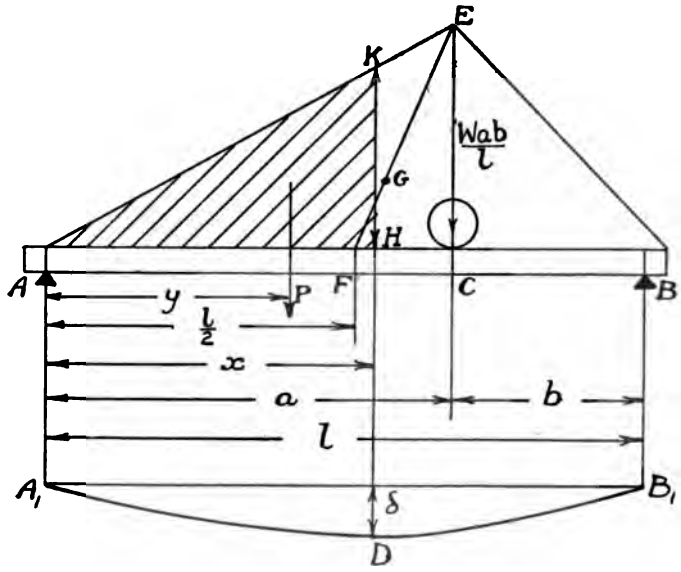

Fig. 88.

The vertical through this point G is at distance $\frac{2}{3}$ F C from C, F being the mid-point of the beam, so that the distance of this centroid from the end B is equal to

$$b + \frac{2}{3}\left(\frac{l}{2} - b\right) = \frac{l}{3} + \frac{b}{3} = \frac{(l + b)}{3}$$

$\therefore$ The reaction at A due to this imaginary load is equal to

$$\frac{\text{Total load}}{l} \times \frac{(l + b)}{3} = \frac{W\,a\,b}{2\,l} \cdot \frac{(l + b)}{3}.$$

Digitized by Google

Now let the deflection be a maximum at the point D at distance x from A.

Then the shear at this point is zero.

i.e., $$R_A - \frac{x}{2} \cdot k\,H = 0$$

i.e., $$\frac{W}{2}\frac{a\,b}{l}\left(\frac{l+b}{3}\right) - \frac{x}{2}\cdot\frac{W\,b\,x}{l} = 0$$

$$\therefore \quad \frac{a\,(l+b)}{3} = x^2$$

or $$x = \sqrt{\frac{a\,(l+b)}{3}} \quad \ldots\ldots\ldots (1)$$

The maximum deflection δ is then obtained by considering the stability of the portion A, D of the imaginary cable.

Then we have as before $\delta = \dfrac{P \cdot y}{H}$

In this case P = area A K H

$$= \frac{W\,b\,x}{l}\cdot\frac{x}{2} = \frac{W\,b\,x^2}{2\,l}$$

$$= \frac{W\,b\,.\,a\,(l+b)}{6\,l} = \frac{W\,a\,b\,(l+b)}{6\,l}$$

$$y = \frac{2}{3}x$$

$$= \frac{2}{3}\sqrt{\frac{a\,(l+b)}{3}}$$

$$H = E\,I$$

$$\therefore \delta = \frac{W\,a\,b\,(l+b)}{6\,l}\cdot\frac{2}{3}\sqrt{\frac{a\,(l+b)}{3}}\cdot\frac{1}{E\,I}$$

$$= \frac{W\,b}{3\,E\,I\,l}\left\{\frac{a\,(l+b)}{3}\right\}^{\frac{3}{2}}$$

This can be put into somewhat simpler form for use by putting $a = \alpha\,l$. Then $b = (1-\alpha)\,l$.

Then $$\delta = \frac{W\,(1-\alpha)}{3\,E\,I}\left\{\frac{\alpha\,l\,(2-\alpha)\,l}{3}\right\}^{\frac{3}{2}}$$

$$= \frac{W\,l^3}{3\,E\,I}\,(1-\alpha)\left\{\frac{2\,\alpha - \alpha^2}{3}\right\}^{\frac{3}{2}}$$

Digitized by Google

Graphical Construction for any Loading.—Let A C B be the B.M. curve for any given load system. Divide the base into a convenient number of equal parts and let e be the length of each base segment. The number is such that each piece of the B.M. diagram is approximately a rectangle. Now set down the mid ordinates of each section diminished in the ratio $\frac{1}{n}$ on a vector line. These ordinates are diminished in order to keep the vector diagram of a workable size.

Now let the space scale be 1″ = x feet, and let the B.M. scale be 1″ = y foot tons. Then considering any section of the B.M.

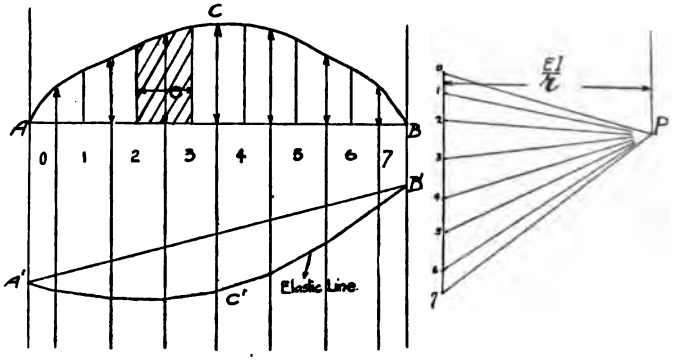

Fig. 89.—*Graphical Construction for Deflections.*

diagram, say 2, 3, the area of this section is $e \times$ mid ordinate. Therefore, on given scales, one inch in height of mid ordinate, since the area of each segment is proportional to the height of the mid ordinate, represents $e \times x \times y$ square ft. tons. Since each portion of the vector line is $\frac{1}{n}$ of the ordinates, the portion 2, 3 of the vector line represents the area of its corresponding section of the B.M. diagram to a scale 1″ = $n \times e \times x \times y$ square ft. tons. Now calculate the length of E I on this scale. This will be too large for practical use, so take a pole P at distance $\frac{E\ I}{r}$, where r is some convenient whole number. With this pole P, draw the link polygon A′ C′ B′, then this is the elastic line

P

Digitized by Google

of the beam for the given loading, or more strictly speaking A′ C′ B′, when reduced to a horizontal base, would give the elastic line. The scale to which the deflections are to be read is then obtained as follows:

If the polar distance were taken equal to E I, the deflections

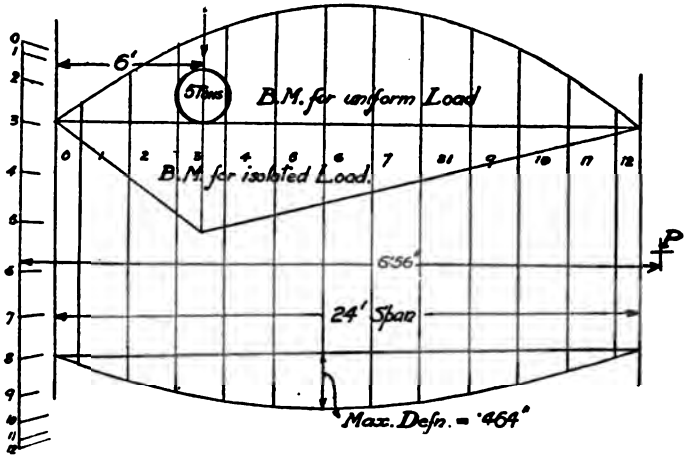

(*Builders' Journal.*)

Fig. 90.—*Example on Deflections.*

would be to the space scale 1″ = x feet, but as the polar distance is $\frac{E\,I}{r}$, the deflections will be to a scale 1″ = $\frac{x}{r}$ feet. The following numerical example should clear up the difficulty as to scale:—

NUMERICAL EXAMPLE.—*A* 16″ × 16″ × 62 *lb. rolled steel joist of* 24 *ft. span carries a uniformly distributed load (including its own weight) of* 8 *tons, and also an isolated load of* 5 *tons, at a point* 6 *ft. from the left-hand support. Find the maximum deflection (Fig.* 90).

In this case E = 12,500 tons per sq. inch, I = 725·7 inch units.

$$\therefore\ E\,I = \frac{12{,}500 \times 725{\cdot}7}{144} = 62{,}980 \text{ sq. ft. tons.}$$

First draw the B.M. diagrams for each of the loads, taking as linear scale, say 1″ = 4 ft., and for the B.M. scale, say 1″ = 20 ft. tons. Now divide the B.M. diagram into a convenient number of equal parts,

Digitized by Google

say 12, and draw the mid ordinate of each part, treating these as force lines, then set these ordinates down a vector line, 0, 1, 2, &c.... 12 to a reduced scale, say one-fourth for convenience.

Then 1 in. down the vector line represents $\frac{4 \times 4 \times 20}{2} = 160$ sq. ft. tons, because each base element is $\frac{1}{2}$ in.

$$\therefore \text{ E I on this scale } = \frac{62{,}980}{160} = 393{\cdot}7 \text{ in.}$$

This is obviously not convenient, so take $\frac{393{\cdot}7}{60} = 6{\cdot}56$ in. Then 1 in. on the link polygon represents $\frac{48}{60}$ in. deflection. The maximum ordinate of the link polygon will be found to be ·58 in.

$$\therefore \text{ Maximum deflection } = {\cdot}58 \times {\cdot}8 = {\cdot}464 \text{ in.}$$

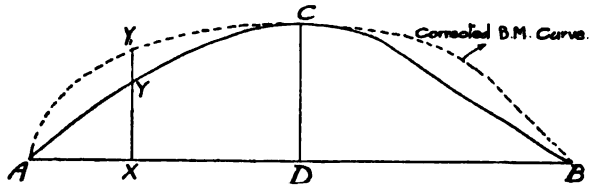

Fig. 91.

ALLOWANCE FOR DEVIATION OF CROSS SECTION.—The cases up to the present have all been on the assumption that the section is constant, or rather that the Moment of Inertia, I, is the same all along the span. If such is not the case, the deflection can be found accurately by first altering the B.M. curve to make up for the variation in the section as follows:—

Suppose A C B (Fig. 91) is the B.M. curve on any beam A D B, and suppose that I_o is the maximum moment of inertia or second moment of the section, this occurring at the point D. Then take any point along the beam at which B.M. is X Y and moment of inertia I_x and find X Y_1 so that X $Y_1 = \frac{X Y \times I_o}{I_x}$. Do this for a number of points along the span, and join up the points thus obtained, and we get the *corrected B.M. curve* from which the deflections can be found by the construction given above. The value I_o is taken in obtaining the expression E I for this construction.

Digitized by Google

Deflections of Girders of Uniform Strength and Constant Depth.—If the cross section of a beam vary so that the maximum stresses are constant along the span, then the modulus of the section must vary in the same way as the B.M., and so the ratio $\frac{M}{Z}$ is constant. If the depth of the girder is also constant, then the ratio $\frac{M}{I}$ will also be constant.

The corrected B.M. diagram will in this case be a rectangle, and the deflection can be found by Mohr's theorem as follows:—

As in the several previous cases we have

$$\delta = \frac{P.y}{E\,I}$$

In this case P will be equal to $\frac{M.L}{2}$ and $y = \frac{L}{4}$ since the curve is a rectangle.

$$\therefore \delta = \frac{M\,L^2}{8\,E\,I}$$

In case of uniform loading $M = \frac{W\,L}{8}$

$$\therefore \delta = \frac{W\,L^3}{64\,E\,I}$$

In case of a central load $M = \frac{W\,L}{4}$

$$\therefore \delta = \frac{W\,L^3}{32\,E\,I}$$

Another simple proof of this relation will be found on p. 220.

Further numerical examples will be found at the conclusion of this chapter.

DEFLECTIONS FROM MATHEMATICAL STANDPOINT.

From equation (3) $\frac{M}{E\,I} = \frac{1}{R}$

Now when R is great, as it will be in this case, we have $\frac{1}{R} = \frac{d^2y}{dx^2}$

$$\therefore \frac{d^2y}{dx^2} = \frac{M}{E\,I}$$

Digitized by Google

$$\therefore \frac{dy}{dx} = \text{slope of beam} = \int \frac{M\,dx}{EI}$$

$$y = \text{deflection of beam} = \int\int \frac{M\,dx}{EI}$$

Now consider the following standard cases (see Fig. 87).

(1) **Simply Supported Beam with Central Load W.**—Consider a point Q at distance x from the centre of the beam.

$$\text{Then } M = \frac{W}{2}\left(\frac{l}{2} - x\right)$$

$$\therefore \int\int M\,dx = \int\int \frac{W}{2}\left(\frac{l}{2} - x\right)$$

$$\int \frac{W}{2}\left(\frac{l}{2} - x\right) = \frac{W\,l\,x}{4} - \frac{W\,x^2}{4} + c_1$$

$$\therefore \int\int \frac{W}{2}\left(\frac{l}{2} - x\right) = \int \frac{W\,l\,x}{4} - \int \frac{W\,x^2}{4} + \int c_1$$

$$= \frac{W\,l\,x^2}{8} - \frac{W\,x^3}{12} + c_1 x + c_2$$

The slope is zero when $x = 0$ $\therefore c_1 = 0$, and the deflection is zero when $x = \pm \frac{l}{2}$

$$\therefore \frac{W\,l^3}{32} - \frac{W\,l^3}{96} + c_2 = 0$$

$$c_2 = -\frac{W\,l^3}{48}$$

Then maximum deflection occurs when $x = 0$

$$\text{Then } \delta = -\frac{c_2}{EI} = \frac{W\,l^3}{48\,EI}$$

(2) **Simply Supported Beam with Uniform Load.**—Taking a point as before at distance x from the centre, we have

$$M = \frac{p\,l}{2}\left(\frac{l}{2} - x\right) - \frac{p}{2}\left(\frac{l}{2} - x\right)^2$$

$$= \frac{p}{2}\left(\frac{l}{2} - x\right)\left(l - \frac{l}{2} + x\right)$$

$$= \frac{p}{2}\left(\frac{l^2}{4} - x^2\right)$$

Digitized by Google

$$\int M\,dx = \frac{p\,l^2\,x}{8} - \frac{p\,x^3}{6} + c_1$$

as before $c_1 = 0$

$$\therefore \int\int M\,dx = \int \frac{p\,l^2\,x}{8} - \int \frac{p\,x^3}{6}$$

$$= \frac{p\,l^2\,x^2}{16} - \frac{p\,x^4}{24} + c_2$$

$c_2 = 0$ when $x = \frac{l}{2}$

$$\therefore -c_2 = \frac{p\,l^4}{64} - \frac{p\,l^4}{384}$$

$$= p\,l^4 \left\{ \frac{6-1}{384} \right\} = \frac{5\,p\,l^4}{384}$$

Then the maximum deflection occurs when $x = 0$

$$\therefore \delta = \frac{-c_2}{E\,I} = \frac{5\,p\,l^4}{384\,E\,I} = \frac{5\,W\,l^3}{384\,E\,I}$$

(3) **Cantilever with an Isolated Load not at Free End.**—Take a point Q at distance x from load.

$$M = W\,x$$

$$\therefore \text{Slope} \times E\,I = \int M\,dx$$

$$= \frac{W\,x^2}{2} + c_1$$

When $x = l$, slope $= 0$

$$\therefore c_1 = \frac{-W\,l^2}{2}$$

$$\therefore E\,I \times \text{slope under load} = \frac{-W\,l^2}{2}$$

$$\text{deflection} = \int\int \frac{M\,dx}{E\,I}$$

$$= \left(\frac{W\,x^3}{6} - \frac{W\,l^2\,x}{2} + c_2 \right) \times \frac{1}{E\,I}$$

When $x = l$, deflection $= 0$

$$\therefore c_2 = \frac{W\,l^3}{6} - \frac{W\,l^3}{2} = \frac{-W\,l^3}{3}$$

Digitized by Google

$\therefore$ Deflection under load, where $x = 0$

$$= c_2 = \left(\frac{-W l^3}{3}\right) \times \frac{1}{EI}$$

Deflection at free end

$$= \text{deflection under load} + \frac{\text{slope under load}}{EI}(L - l)$$

$$= \left\{\frac{-W l^3}{3} - \frac{W l^2}{2}(L - l)\right\}\frac{1}{EI}$$

$$= -\frac{W}{EI}\left\{\frac{l^2 L}{2} - \frac{l^3}{6}\right\}$$

$$= \frac{-W l^2}{2EI}\left(L - \frac{l}{2}\right)$$

or neglecting the minus sign, which indicates only that the deflection is downward, we get

$$\text{Maximum deflection} = \delta = \frac{W l^2}{2EI}\left(L - \frac{l}{3}\right)$$

(4) Cantilever with Isolated Load at Free End.—This is obtained by putting $l = L$ in the above case,

$$i.e.,\ \delta = \frac{W L^3}{3EI}$$

(5) Cantilever with Uniform Load from Fixed End to a point before Free End.

In this case $M = \frac{p \cdot x^2}{2}$

$$\therefore \text{Slope} \times EI = \int M\, dx$$

$$= \frac{p x^3}{6} + c_1$$

When $x = l$, slope $= 0$

$$\therefore c_1 = \frac{-p l^3}{6}$$

$$\therefore EI \times \text{slope under load} = \frac{-p l^3}{6}$$

Digitized by Google

$$\text{E I} \times \text{deflection} = \int\int \text{M}\, dx$$

$$= \frac{p x^4}{24} - \frac{p l^3 x}{6} + C_2$$

When $x = l$, deflection $= 0$

$$\therefore C_2 = \frac{p l^4}{24} - \frac{p l^4}{6} = -\frac{p l^4}{8}$$

$\therefore$ E I $\times$ deflection under load, when $x = 0$

$$= C_2 = -\frac{p l^4}{8}$$

$\therefore$ E I $\times$ deflection at free end $= -\frac{p l^4}{8}$ + slope under load $\times$ E I $\times$ (L $-$ l)

$$= -\frac{p l^4}{8} + (\text{L} - l)\left(-\frac{p l^3}{6}\right)$$

$$= -\frac{p l^3}{2}\left\{\frac{l}{4} + \frac{\text{L}}{3} - \frac{l}{3}\right\}$$

$$= -\frac{p l^2}{2}\left\{\frac{\text{L}}{3} - \frac{l}{12}\right\}$$

$$= -\frac{p l^3}{6}\left(\text{L} - \frac{l}{4}\right)$$

$$= -\frac{\text{W} l^2}{6}\left(\text{L} - \frac{l}{4}\right)$$

$\therefore$ Neglecting $-$ sign we have:

$$\delta = \frac{\text{W L}^2}{6\,\text{E I}}\left(\text{L} - \frac{l}{4}\right)$$

(6) **Cantilever with Uniform Load over Whole Length.**—This is the same as the previous case when l = L.

$$\therefore \delta = \frac{\text{W L}^2}{6\,\text{E I}}\left(\text{L} - \frac{\text{L}}{4}\right)$$

$$= \frac{\text{W L}^3}{8\,\text{E I}}$$

(7) **Simply Supported Beam with Isolated Load anywhere.**—Let a load W be placed at a point C on a beam

Digitized by Google

A B, Fig. 92, of span l, and let it be at distance $a\,l$ from the end A, the distance from the end B being $(1 - a)\,l$.

$$\text{Then } R_B = \frac{W\,a\,l}{l} = W\,a$$

$$R_A = \frac{W\,(1 - a)\,l}{l} = W\,(1 - a)$$

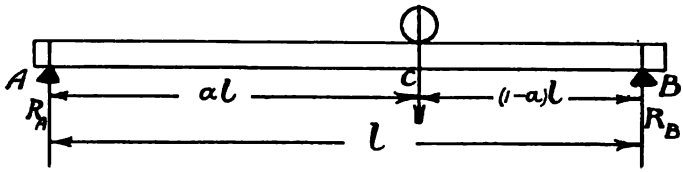

Fig. 92.

Consider a point at distance x from A between A and C.

$$\text{Then } M_x = R_A\,x = W\,(1 - a)\,x$$

$$\therefore E\,I\frac{d^2y}{dx^2} = W\,(1 - a)\,x \quad \ldots\ldots(1)$$

$$\therefore E\,I\frac{dy}{dx} = \frac{W\,(1 - a)\,x^2}{2} + C_1 \quad \ldots\ldots(2)$$

$$E\,I\,y = \frac{W\,(1 - a)\,x^3}{6} + C_1\,x + C_2 \quad \ldots\ldots(3)$$

Now consider a point at distance x_1 from A between C and B.

$$\text{Then } Mx_1 = R_A\,x_1 - W\,(x_1 - a\,l)$$
$$= W\,(1 - a)\,x_1 - W\,x_1 + W\,a\,l$$
$$= W\,a\,l - W\,a\,x_1$$

$$\therefore E\,I\frac{d^2y}{dx_1^2} = W\,a\,l - W\,a\,x_1 \quad \ldots\ldots \quad (4)$$

$$\therefore E\,I\frac{dy}{dx} = W\,a\,l\,x_1 - W\,a\,\frac{x_1^2}{2} + C_3 \quad \ldots\ldots(5)$$

$$E\,I\,y = \frac{W\,a\,l\,x_1^2}{2} - \frac{W\,a\,x_1^3}{6} + C_3\,x_1 + C_4 \quad \ldots(6)$$

In equation (3) when $x = 0, y = 0$

$$\therefore C_2 = 0$$

Digitized by Google

In equation (6) when $x = l, y = 0$

$$\therefore \frac{W a l^3}{2} - \frac{W a l^3}{6} + C_3 l + C_4 = 0.$$

$$\therefore C_4 = \frac{- W a l^3}{3} - C_3 l \ldots\ldots\ldots\ldots\ldots\ldots (7)$$

These two equations representing the elastic line on either side of the load have the same slope and the same ordinate when

$$x = x_1 = a l$$

$\therefore$ putting in these values in equations (2) and (5) and equating we have:

$$\frac{W (1 - a) a^2 l^2}{2} + C_1 = W a^2 l^2 - \frac{W a^3 l^2}{2} + C_3$$

$$C_1 = \frac{W a^2 l^2}{2} + C_3 \ldots\ldots\ldots\ldots\ldots\ldots (8)$$

Putting in value $x = x_1 = a l$ in equations (3) and (6) and equating we have:

$$\frac{W (1 - a) a^3 l^3}{6} + C_1 a l = \frac{W a^3 l^3}{2} - \frac{W a^4 l^3}{6} + C_3 a l + C_4$$

$$C_1 a l = \frac{W a^3 l^3}{3} + C_3 a l - \frac{W a l^3}{3} - C_3 l$$

$$C_1 a = \frac{W a^3 l^2}{3} - \frac{W a l^2}{3} + C_3 (a - 1)$$

$$= \frac{W a^3 l^2}{3} - \frac{W a l^2}{3} + \left(C_1 - \frac{W a^2 l^2}{2}\right)(a - 1)$$

$$\therefore C_1 = \frac{W a^3 l^2}{3} - \frac{W a l^2}{3} - \frac{W a^3 l^2}{2} + \frac{W a^2 l^2}{2}$$

$$= - W a l^2 \left(\frac{1}{3} + \frac{a^2}{6} - \frac{a}{2}\right)$$

$$= - \frac{W a l^2}{6} (2 - 3 a + a^2)$$

$$= - \frac{W a l^2}{6} (1 - a) (2 - a) \ldots\ldots\ldots\ldots (9)$$

$\therefore$ equation (3) becomes

$$E I y = \frac{W (1 - a) x^3}{6} - \frac{W a l^2 x}{6} (1 - a) (2 - a) \ldots\ldots (10)$$

Digitized by Google

Assume $a > \frac{1}{2}$, then the maximum deflection occurs between A and C. y is a maximum when $\frac{dy}{dx} = 0$

i.e., when $\frac{W(1-a)}{6} 3x^2 - \frac{W a l^2}{6}(1-a)(2-a) = 0$

i.e., when $x^2 = \frac{l^2 a (2-a)}{3}$

i.e., $x = l\sqrt{\frac{a(2-a)}{3}}$ .....(11)

Putting this value in equation (10) we have:

$$EI\delta = \frac{W l^3 (1-a)}{6} \cdot \left\{\frac{a(2-a)}{3}\right\}^{\frac{1}{2}} - \frac{W a l^3 . l}{6}\left\{\frac{a(2-a)}{3}\right\}^{\frac{1}{2}} \cdot (1-a)(2-a)$$

$$= W l^3 (1-a)\left\{\frac{a(2-a)}{3}\right\}^{\frac{3}{2}}\left(\frac{1}{6} - \frac{3}{6}\right)$$

$$= \frac{W l^3}{3}(1-a)\left\{\frac{a(2-a)}{3}\right\}^{\frac{3}{2}}$$

or $\delta = \frac{W l^3 (1-a)}{3EI}\left\{\frac{2a - a^2}{3}\right\}^{\frac{3}{2}}$ .....(12)

The deflection under the load is obtained by putting $x = a l$ in (10).

Then $EIy = \frac{W(1-a)a^3 l^3}{6} - \frac{W a^2 l^3}{6}(1-a)(2-a)$

$$= \frac{W a^2 l^3 (1-a)}{6}[a - 2 - a]$$

$$\therefore y = \frac{W a^2 l^3 (1-a)^2}{3EI} \text{ .....(13)}$$

Deflection of Girder of Uniform Strength with Parallel Flanges.—If the section of a girder varies along its length so that the stress is constant, then $\frac{M}{Z}$ is constant, so that if the depth is also constant $\frac{M}{I}$ is also constant. Assuming also that E is also constant we have

$$\frac{1}{R} = \frac{M}{EI} = \text{constant.}$$

Digitized by Google

$\therefore$ Wherever $\frac{M}{E\,I}$ is constant, the beam bends to an arc of a circle.

Let Fig. 93, represent a beam bent to an arc of a circle. (N.B.—The beam is shown vertical instead of horizontal for convenience of figure.)

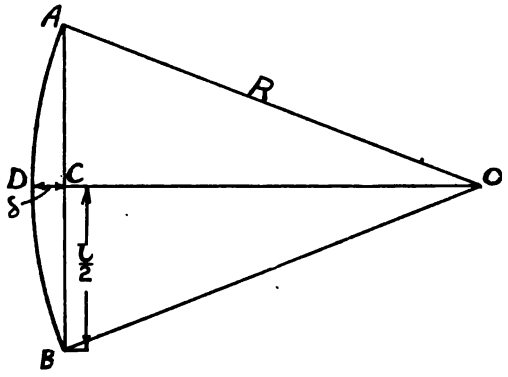

Fig. 93.

Then, if O is the centre of the circle and C D the deflection of the beam, we have from the property of the circle

$$C\,D\,(C\,O + O\,D) = A\,C^2$$

As C D is very small we may write

$$\delta \,.\, 2\,R = \left(\frac{l}{2}\right)^2 = \frac{l^2}{4}$$

$$\therefore \delta = \frac{l^2}{8\,R}$$

$$\text{Now } \frac{1}{R} = \frac{M}{E\,I}$$

$$\therefore \delta = \frac{M\,l^2}{8\,E\,I}$$

A summary of deflections for various kinds of beams and loadings will be found on p. 288.

Resilience in Bending.—The work done in bending a beam to a given stress may be obtained as follows.

Digitized by Google

The work done by a couple in moving through an angle is equal to the product of the moment of the couple into the angle turned through. Therefore, if a short portion of a beam subjected to a bending moment M is bent to a slope δi, the work done in bending is $\frac{M}{2} \delta i$, because M gradually increases from o to M.

$\therefore$ Total work done in bending over whole beam

$$= P = \int \frac{M}{2} d i$$

Now $\frac{d i}{d x} = \frac{1}{R}$, *i.e.*, $\frac{1}{R}$ = rate of change of slope

$$\therefore P = \int \frac{M}{2 R} d x$$

but $\frac{1}{R} = \frac{M}{E I}$

$$\therefore P = \int \frac{M^2}{2 E I} d x$$

If the B.M. is constant, and the section is rectangular, then :

$$P = \frac{M^2}{2 E I} \int_0^L d x = \frac{M^2 L}{2 E I}$$

But $M^2 = \frac{f^2 I^2}{d^2}$

$$\therefore P = \frac{f^2 I . L}{2 . E . d^2}$$

Now $I = \frac{b h^3}{12}$, $d = \frac{h}{2}$

$$\therefore P = \frac{f^2}{E} \cdot \frac{4 \times b h^3 \times L}{2 \times 12 \times h^2}$$

$$= \frac{f^2}{6 E} . V$$

Where V is the volume of the beam.

$$\therefore \text{Resilience} = \frac{P}{V} = \frac{f^2}{6 E}$$

Digitized by Google

If the load is isolated and the section is rectangular.—Consider one-half of the beam, then x is the distance from the abutment.

$$M = \frac{W x}{2}$$

$$\therefore \frac{P}{2} = \int_0^{\frac{L}{2}} \frac{M^2 \, dx}{2 E I}$$

$$= \int_0^{\frac{L}{2}} \frac{W^2 x^2 \, dx}{8 E I}$$

$$= \frac{W^2 L^3}{192 E I}$$

$$P = \frac{W^2 L^3}{96 E I} = \frac{1}{2} W . \delta$$

Now M at centre $= \frac{W L}{4} = \frac{f I}{d}$

$$\therefore P = \frac{f^2 I^2 . L}{6 . E I . d^2}$$

$$= \frac{f^2}{6 E} \cdot \frac{I L}{d^2}$$

As before $I = \frac{b h^3}{12}$, $d = \frac{h}{2}$

$$\therefore P = \frac{f^2}{6 E} \cdot \frac{4 b h^3 . L}{12 h^2}$$

$$= \frac{f^2}{18 E} . V$$

$$\therefore \text{Resilience} = \frac{P}{V} = \frac{f^2}{18 E}$$

Numerical Examples on Deflections, etc.

(1) *A girder has a span of* 120 *feet, and has to support a uniformly distributed load of* $1\frac{1}{4}$ *tons per foot run. What depth must the girder have in the centre if the maximum deflection is not to exceed* $\frac{1}{1200}$ *of the span? The maximum stress in the flanges is not to exceed* $6\frac{1}{2}$ *tons per sq. in. and* E *is* 12,000 *tons per sq. in.* (*B.Sc. Lond. 1907.*)

This question is not quite clear, because if the depth is not the

Digitized by Google

same throughout, we cannot calculate the deflection until we know the way it varies.

We will assume the depth constant :

Now at centre $M = \frac{W l}{8} = \frac{1\frac{1}{2} \times 120 \times 120}{8}$ ft. tons

$= 27{,}000$ in. tons.

$\therefore$ If maximum stress $= 6\frac{1}{2}$ tons per sq. in. since $f = \frac{M}{Z}$

$$Z = \frac{27{,}000}{6\frac{1}{2}} \text{ in. units.}$$

$$\text{Now } \delta = \frac{5\ W\ L^3}{384\ E\ I}$$

$$\delta = \frac{L}{1200} = \frac{1}{10} \text{ ft.}$$

$$\therefore \frac{12}{10} = \frac{5 \times 150 \times 120 \times 120 \times 120}{384 \times 12{,}000\ I} \times 1728$$

$$\therefore I = 405{,}000 \text{ in. units.}$$

$$\text{Now } \frac{I}{Z} = \frac{D}{2} \text{ where D = depth.}$$

$$\therefore D = \frac{2\ I}{Z} = \frac{2 \times 405{,}000 \times 6{\cdot}5}{27{,}000} \text{ ins.}$$

$$= \frac{30 \times 6{\cdot}5}{12} = 16{\cdot}25 \text{ ft.}$$

This is a greater depth than would be usually adopted in practice for a solid web girder.

(2) *A cast-iron water pipe, 10 inches external diameter and ½ inch thick rests on supports 40 feet apart. Calculate the maximum stress in the outer fibre of the material when empty and when full of water, also the corresponding deflections. (A.M.I.C.E. Feb. 1906.)*

In this case $I = \frac{\pi (D^4 - d^4)}{64} = \frac{\pi (10^4 - 9^4)}{64}$

$= 168{\cdot}8$ in. units.

$$\therefore Z = \frac{I}{d} = \frac{168{\cdot}8}{5} = 33{\cdot}76 \text{ in. units.}$$

Volume of pipe $= \frac{\pi}{4}\left(100 - 81\right) \times \frac{40}{114} = 4{\cdot}14$ cub. feet.

Volume of water $= \frac{\pi}{4} \cdot \frac{81}{144} \times 40 = 17{\cdot}67$ cub. feet.

$\therefore$ Weight of Pipe $= w = \frac{4{\cdot}14 \times 450}{2240} = {\cdot}832$ ton.

Weight of Water $= w_1 = \frac{17{\cdot}67 \times 62{\cdot}5}{2240} = {\cdot}492$ ton.

Digitized by Google

$$\therefore W = w + w_1 = 1{\cdot}324 \text{ tons (about)}$$

$\because$ Max. stress when empty $= \frac{M}{Z} = \frac{{\cdot}832 \times 40 \times 12}{8 \times 33{\cdot}76} = 1{\cdot}48$ tons per sq. in.

Max. stress when full $= \frac{1{\cdot}48 \times 1.324}{{\cdot}832} = 2{\cdot}35$ tons per sq. in.

Taking E as 8000 tons per sq. in.

δ when empty $= \frac{5\,W\,L^3}{384\,E\,I}$

$$= \frac{5 \times {\cdot}832 \times 40 \times 40 \times 40 \times 12 \times 12 \times 12}{384 \times 168{\cdot}8 \times 8000}$$

$= {\cdot}89$ inch.

δ when full $= \frac{{\cdot}89 \times 1{\cdot}324}{{\cdot}832} = 1{\cdot}41$ inches.

(3) *A pole made of mild steel tube, 6 inches diameter and $\frac{1}{2}$ inch thick is firmly fixed in the ground, the top being 10 feet above the ground level. A horizontal pull of 2000 lb. is applied at a point 6 feet from the ground. Find the deflection at the top. E = 13,500 tons per square inch. (B.Sc. Lond. 1903.)*

In this case $I = \frac{\pi(D^4 - d^4)}{64} = \frac{\pi(6^4 - 5^4)}{64}$

$= 32{\cdot}9$ in. units

This is the same as Case (2).

$$\therefore \delta = \frac{W l^2}{2\,E\,I}\left(L - \frac{l}{3}\right)$$

In this case $l = 6$ ft. $\quad L = 10$ ft.

$W = 2000$ lbs. $= \frac{2000}{2240}$ tons.

$$\therefore \delta = \frac{2000}{2240} \times \frac{6 \times 6 \times 12 \times 12 \quad 8 \times 12}{13{,}500 \times 32{\cdot}9 \times 2}$$

$= {\cdot}5$ inch, nearly.

(4) *What is the least internal radius to which a bar of steel 4 inches wide by $\frac{3}{8}$ inch thick can be bent so that the maximum stress will not exceed 5 tons per square inch? E = 13,000 tons per square inch. (A.M.I.C.E. Feb. 1907.)*

The general formula for bending is :

$$\frac{f}{d} = \frac{M}{I} = \frac{E}{R}$$

$$\therefore \frac{f}{d} = \frac{E}{R}$$

$$\text{or } R = \frac{d\,E}{f}$$

Digitized by Google

In this case d = distance from N.A. to extreme fibre,

$$= \frac{3}{16} \text{ in.}$$

$$\therefore R = \frac{3}{16} \times \frac{13{,}000}{5}$$

$$= 488 \text{ inches.}$$

$$= 40{\cdot}7 \text{ feet.}$$

It should be noted that the width of the bar is not necessary in this problem.

The result is the radius of the centre line.

(5) *A cast-iron beam has a rectangular cross section, the thickness being* 1 *inch and the depth of the section* 2 *inches. It is found that a load of* 10 *cwt. placed in the centre of a* 36*-inch span deflects this beam by* ·11 *inch. Through what height would a weight of* ½ *a cwt. have to fall on to the centre of the same span to produce a deflection of* ·30 *inch? (B.Sc. Lond. 1907.)*

It takes 10 cwt. to produce a deflection of ·11 inch.

$\therefore$ It would take $\frac{10 \times {\cdot}30}{{\cdot}11}$ to produce a deflection of ·30 inch.

Now the work done in deflecting a bar when loaded in the centre $= \frac{1}{2} W \delta$,

$\therefore$ Work done to produce ·30 inch deflection

$$= \frac{1}{2} \cdot \frac{10 \times {\cdot}30}{{\cdot}11} \times {\cdot}30 \text{ in. cwt.}$$

$$= {\cdot}341 \text{ ft. cwt.}$$

If h is the height from which the ½ cwt. falls, work done by it $= \frac{1}{2}\left(h + \frac{{\cdot}30}{12}\right)$ ft. cwt., because we shall take h as the height above the unstrained position of the beam.

These two amounts of work must be the same,

$\therefore$ We have $\quad \frac{1}{2}\left(h + \frac{{\cdot}30}{12}\right) = {\cdot}341$

$$h = {\cdot}682 - \frac{{\cdot}30}{12} \text{ foot.}$$

$$= 4{\cdot}09 - {\cdot}30 \text{ inches.}$$

$$= 3{\cdot}79 \text{ inches.}$$

Digitized by Google

CHAPTER IX.

FIXED AND CONTINUOUS BEAMS.

If the ends of a beam are fixed in a given direction so that they are not able to take up the inclination due to free bending, or if a beam rests on more than two supports, the B.M. and shear diagrams will be different from the cases of simply supported beams that we have considered up to the present.

In the first case the beam is said to be *fixed*, *built-in*, or *encastré*, and in the second it is said to be *continuous*.

We will consider how the shear and B.M. diagrams can be found for such beams, and will point out their advantages and disadvantages compared with simply supported beams.

FIXED BEAMS.

If the ends of a beam are fixed in a horizontal direction, then the beam when bent takes up some form such as A B C (Fig. 94). If the ends were free it would assume the dotted form A′ B C′, and to get it back to the form A B C, negative bending

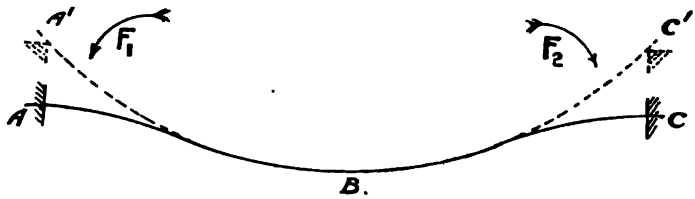

Fig. 94. *Fixed Beams.*

moments, shown diagrammatically as due to forces F_1, F_2, have to be imposed upon it. The ends of the beams will therefore be subjected to bending moments which will be negative because they cause curvature in an opposite direction to that due to the load. This change in sign of the bending moment means that

Digitized by Google

the tension and compression sides of the beam are reversed. We will consider the cases of fixed beams both from the graphical and the mathematical standpoint, as we did in the case of the deflections of beams.

—INVESTIGATION FROM GRAPHICAL STANDPOINT.

According to Mohr's Theorem, the deflected form of a beam is the same as that of an imaginary cable of the same span loaded with the bending-moment curve of the beam, and subjected to a horizontal pull equal to the flexural rigidity (E I). If the ends of a beam are fixed in a horizontal direction, the first and last links of the link polygon determining the elastic line will be parallel; this means to say that the first and last points on the vector line on which the elemental areas of the bending moment curve are set down must coincide. But this is equivalent to saying that the *total area* of the bending moment curve for the fixed beam must be zero. This enables us to enunciate the following rule:

If the ends of a beam are fixed in a horizontal direction at the same level, and the section of the beam is constant along its length, there will be negative bending moments induced, and the area of the negative bending moment diagram will be equal to that due to the load for the beam if considered freely supported.

We will speak of the negative bending moment diagram as the 'end B.M. diagram,' and that for the beam freely supported as the 'free B.M. diagram.'

The problem now divides itself into two cases: (*a*) That in which the loading is symmetrical. (*b*) That in which the loading is irregular or asymmetrical.

Symmetrical Loading. — If the loading is symmetrical then the beam looks the same from whichever side it is viewed, and so the end bending moments will be equal, and their value can be found by dividing the area of the free B.M. diagram by the span. This will be made more clear by considering the following cases:—

(1) UNIFORM LOAD ON FIXED BEAM.—Let a uniform load of intensity p cover a span A B (Fig. 95) of length l. The free B.M. curve is in this case a parabola A C B, with maximum ordinate $\frac{p l^2}{8}$

Digitized by Google

Therefore, since the area of a parabola is two-thirds of the area of the circumscribing rectangle, area of free B.M. curve $= \frac{2}{3} l \times \frac{p l^2}{8} = \frac{p l^3}{12}$

$$\therefore \text{ End B.M.} = \frac{p l^3}{12} \div l = \frac{p l^2}{12}$$

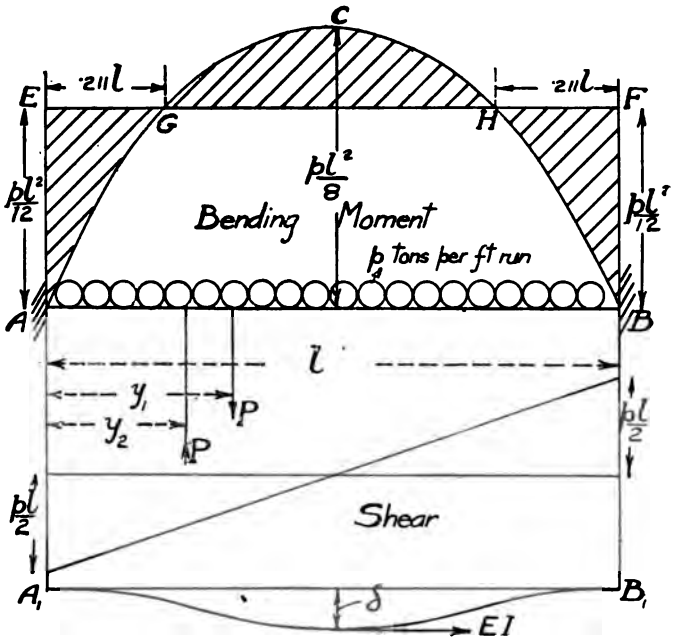

Fig. 95.—Fixed Beam with Uniform Load.

Then setting up A E and B F equal to $\frac{p l^2}{12}$ and joining E F we get the end B.M. diagram, and the effective B.M. curve is the difference as shown shaded. At the points G and H the B.M. is zero, and these points are called the *points of contra-flexure*, the curvature of the elastic line changing sign at these points.

Suppose the point G is at distance x from the centre of the beam, then the ordinate of the parabola must be equal to $\frac{p l^2}{12}$

Digitized by Google

$$i.e., \frac{p}{2}\left(\frac{l^2}{4} - x^2\right) = \frac{p\,l^2}{12}$$

$$\therefore \frac{p\,x^2}{2} = \frac{p\,l^2}{24}$$

$$\therefore x^2 = \frac{l^2}{12}$$

$$x = \frac{l}{2\sqrt{3}}$$

$$\therefore \text{Distance of G from E} = \frac{l}{2} - x = \frac{l}{2} - \frac{l}{12\sqrt{3}}$$

$$= \frac{l}{2}\left(\sqrt{3} - \frac{1}{\sqrt{3}}\right) = \frac{l}{6}\left(3 - \sqrt{3}\right)$$

$$= \cdot 211\,l$$

SHEAR DIAGRAM. — With symmetrical loading the shear diagram will be the same as for the simply supported beam. This is because the shear at any point of a beam is equal to the slope of the B.M. curve at that point, and the slope of the B.M. is not altered in the case of symmetrical loading because the base line of the diagram is merely shifted vertically.

DEFLECTION. — The deflection at the centre can be found as before by considering the stability of the imaginary cable $A_1 B_1$.

Considering the stability of the left-hand half of the cable, then taking moments about A_1, we have

$$E\,I \times \delta = P y_1 - P y_2$$

$$= P\,(y_1 - y_2)$$

In this case P = area of one-half of the free B.M. curve,

$$= \frac{2}{3} \cdot \frac{l}{2} \cdot \frac{p\,l^2}{8} = \frac{p\,l^3}{24}$$

$$y_1 = \frac{5\,l}{16}$$

$$y_2 = \frac{l}{2}$$

$$\therefore E\,I \times \delta = \frac{p\,l^3}{24}\left(\frac{5\,l}{16} - \frac{l}{4}\right) = \frac{p\,l^4}{384}$$

$$\therefore \delta = \frac{p\,l^4}{384\,E\,I} = \frac{W\,l^3}{384\,E\,I}$$

Digitized by Google

It will be noted that this is one-fifth of the deflection for a freely supported beam with the same loading.

(2) ISOLATED CENTRAL LOAD ON A FIXED BEAM.—In this case the area of the free B.M. curve $= \frac{1}{2} l \times \frac{W l}{4} = \frac{W l^2}{8}$

$$\therefore \text{ End B.M.} = \frac{W l^2}{8} \div l = \frac{W l}{8}$$

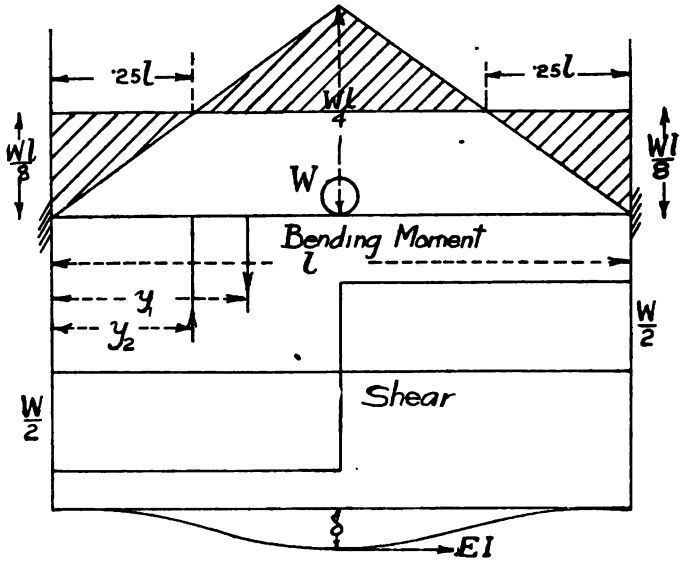

Fig. 96.—Fixed Beam, with Central Load.

The B.M. and shear diagrams are as shown in Fig. 96, the points of contraflexure being at $\frac{1}{4}$ and $\frac{3}{4}$ span.

DEFLECTION.—As in the previous case we have:

$$E\,I \times \delta = P\,(y_1 - y_2)$$

$$\text{In this case } P = \frac{W l}{8} \cdot \frac{l}{2} = \frac{W l^2}{16}$$

$$y_1 = \frac{l}{3}$$

$$y_2 = \frac{l}{4}$$

Digitized by Google

$$\therefore \text{E I} \cdot \delta = \frac{\text{W } l^2}{10}\left(\frac{l}{3} - \frac{l}{4}\right) = \frac{\text{W } l^3}{192}$$

$$\therefore \delta = \frac{\text{W } l^3}{192 \text{ E I}}$$

This is one-fourth of the deflection for a freely supported beam with the same loading.

* **Asymmetrical Loading.**—In this case the end B.M's. will not be equal, and in this case, in addition to the condition that the areas of the end B.M. diagram and free B.M. diagrams must be equal, we have the further condition that their centres of gravity must fall on the same vertical line.

This can be proved as follows: Considering the imaginary cable and taking moments about one end, the tension at the other end passes through the point so that its moment is zero. Therefore the moment of the B.M. diagrams about this point must be zero. Since the areas of these diagrams are equal, their centres of gravity must be at the same distance from the given point.

Let a span A B, Fig. 97, of length l, be subjected to any irregular load system which produces a free B.M. curve A *c d* B, and let the centre of gravity of that diagram lie upon the vertical line G G. Suppose the end B.M.s are M_A and M_B, and A *a* and B *b* are set up equal to these end B.M.s, then the trapezium A *a b* B is the end B.M. diagram, and the conditions that have to be satisfied are that the area of the trapezium shall be equal to the area of the curve A *c d* B, and that its centre of gravity shall lie upon the line G G. Join *a* B, thus dividing the trapezium into two triangles, and draw verticals X X and Y Y at distances equal to $\frac{l}{3}$ from A and B. The centres of gravity of the triangles A *a* B, B *a b* lie on the lines X X and Y Y respectively, and our problem resolves itself into dividing the total area of the curve A *c d* B (which area we will denote by a) into two areas acting down the lines X X and Y Y. This is effected by treating the areas as vertical forces, and setting down a vector line o, 1, to represent the area a. Taking any convenient pole P, we then join o P and 1 P and draw $x\,g$, $g\,y$ across the verticals X X, G G, Y Y parallel to o P, 1 P respectively, and

Digitized by Google

join $x\,y$; then drawing P 2 parallel to $x\,y$, 1, 2 gives us the area which must act down the vertical Y Y and 2, 0 that down X X.

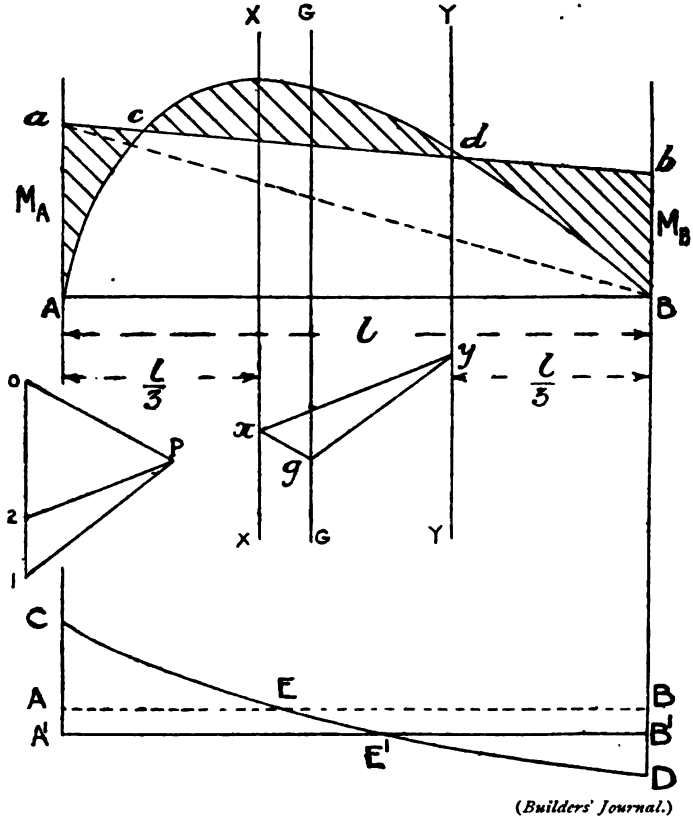

(*Builders' Journal.*)

Fig. 97.—General Case of Fixed Beams.

Then $M_A \times \frac{l}{2}$ = area of triangle A a B = 2, 0

$$\therefore M_A = \frac{2,0 \times 2}{l}$$

Similarly $M_B = \frac{1,2 \times 2}{l}$

This enables the B.M. diagram to be drawn.

Digitized by Google

SHEAR DIAGRAM.—In this case as the end B.M.s are not equal the shear diagram will not be the same as for a freely supported beam, but the base line will be shifted. Since the shear at any point is the slope of the B.M. curve, the base line of the shear curve will be shifted downwards by an amount $\frac{M_A - M_B}{l}$ because this is the change in slope of the base line of the B.M. diagram between the freely supported and the fixed beam. If in the figure A C E D B represents the shear diagram for a freely supported beam with the given loading, then the effect of building-in the ends on this diagram is to lower its base line by an amount $A A' = B B' = \frac{M_A - M_B}{l}$, thus giving the diagram A' C E' D B'.

Special Case.—Fixed Beam with uniformly Increasing Load.—Let a beam A B of span l be subjected to a load of uniformly increasing intensity, the intensity at unit distance from B being p tons per ft. run, the total load being W. Then, as shown on p. 120 for a freely supported beam $R_B = \frac{W}{3}$, $R_A = \frac{2W}{3}$ and the free B.M. diagram is a parabola of the 3rd order, the maximum B.M. being equal to ·128 W l and occurring at a distance ·577 l from B. Then the area of this free B.M. diagram is equal to $\frac{W l^2}{12}$ and its centre of gravity occurs at a distance $\frac{8 l}{15}$ from B. This can be proved mathematically as follows:

$$\text{Area of B.M. curve} = \int_0^l M \, dx$$

$$= \int_0^l \left(\frac{p l^2 x}{6} - \frac{p x^3}{6} \right) dx$$

$$= \left[\frac{p l^2 x^2}{12} - \frac{p l^4}{24} + C \right]_0^l$$

The area = 0 when $x = 0$. $\therefore C = 0$

$$\therefore \text{Area} = \frac{p l^4}{12} - \frac{p l^4}{24} = \frac{p l^4}{24} = \frac{W l^2}{12}$$

Digitized by Google

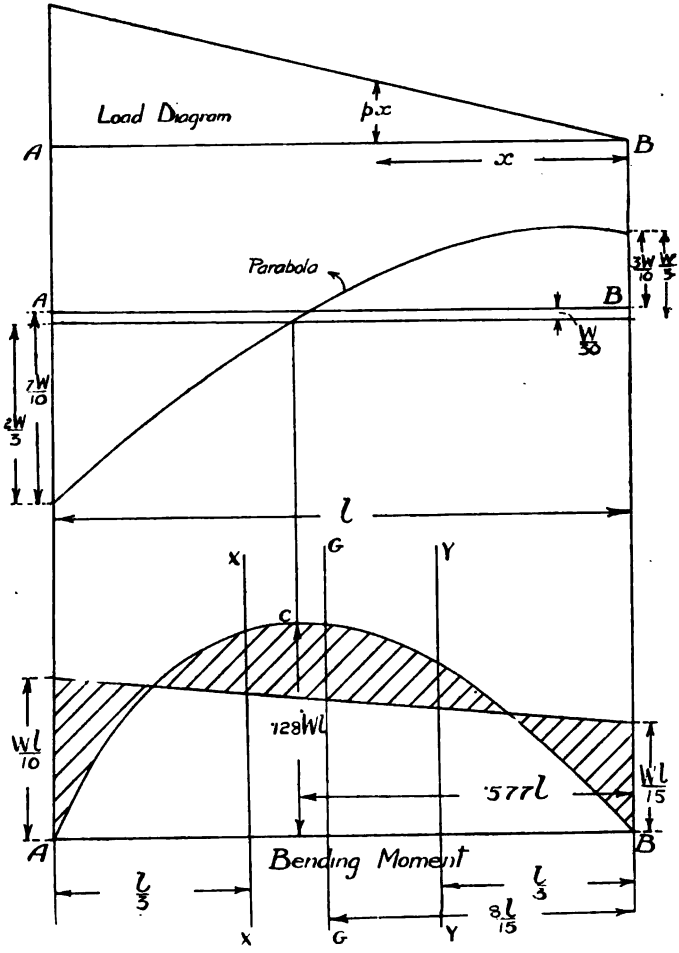

Fig. 98.—Fixed Beam with Uniformly Increasing Load.

Digitized by Google

First mt. of B.M. curve about vertical through B $= \int_0^l M\,x\,dx$

$$= \int_0^l \left(\frac{p\,l^2}{6}\,x^2 - \frac{p}{6}\,x^4\right) dx$$

$$= \left[\frac{p\,l^2\,x^3}{18} - \frac{p\,x^5}{30} + C_1\right]_0^l$$

Moment $= 0$ when $x = 0$. $\therefore C_1 = 0$

$\therefore$ First moment $= \frac{p\,l^5}{18} - \frac{p\,l^5}{30} = \frac{p\,l^5}{45}$.

$\therefore$ Distance of centroid from vertical through B $= \frac{\text{1st moment}}{\text{area}}$

$$= \frac{p\,l^5}{45} \div \frac{p\,l^4}{24}$$

$$= \frac{24\,l}{45} = \frac{8\,l}{15}$$

This fixes the line G G, and the areas that must be considered as acting up X X and Y Y respectively are thus $\frac{W\,l^2}{20}$ and $\frac{W\,l^2}{30}$ since the total area $\frac{W\,l^2}{12}$ acts at distance $\frac{3\,l}{15}$ from Y Y.

$\therefore$ Taking moments about Y Y we have :

Area acting down X X $\times \frac{l}{3} = \frac{W\,l^2}{12} \times \frac{3\,l}{15}$

$\therefore$ Area acting down XX $= \frac{W\,l^3}{60} \div \frac{l}{3} = \frac{W\,l^2}{20}$

$$\therefore M_A = \frac{W\,l^2}{20} \times \frac{2}{l} = \frac{W\,l}{10}$$

$$M_B = \frac{W\,l^2}{30} \times \frac{2}{l} = \frac{W\,l}{15}$$

The resulting B.M. diagram then comes as shown shaded in Fig. 98.

The amount of shifting of the base line for shear will be $\left(\frac{W\,l}{10} - \frac{W\,l}{15}\right) \div l = \frac{W}{30}$ so that the shears at the ends are $\frac{7}{10}\,W$ and $\frac{3}{10}\,W$ respectively, the shear curve for the fixed beam then coming as shown.

Digitized by Google

Graphical Method of finding G G. If the nature of the loading is such that the position of the line G G cannot be calculated without difficulty we may proceed as follows: Divide the free B.M. diagram A C B up into a number of vertical strips, not necessarily equal, and draw vertical force lines through the centres of these strips and set down the ordinates on a vector line, and with any pole draw a link polygon. The point where the first and last links meet will be a point on the line G G. This is the same method as adopted in finding the centroid of a figure by Mohr's method (Chap. III.). The area of the B.M. diagram can be found by sum-curve construction, and the problem completed as indicated with reference to Fig. 97.

INVESTIGATION FROM MATHEMATICAL STANDPOINT.

As we have previously seen:

$$\text{Slope of beam} = \int \frac{M}{E\,I}\, d\,x$$

If the end of the beam is built-in this slope must come zero at the two ends.

Consider the following special cases:

(1) **Uniform Load on Fixed Beam.**—Taking the intensity of load as p and the centre of the beam as origin, then considering a point at distance x from the centre, then for the freely supported beam we have:

$$M_x = \frac{p}{2}\left(\frac{l^2}{4} - x^2\right)$$ (See p. 213.)

Let the effect of the building-in be to cause an end B.M $= M_A$.

Then for the fixed beam $M_x = \frac{p}{2}\left(\frac{l^2}{4} - x^2\right) - M_A$

$$\therefore \text{Slope} = \int \frac{M}{E\,I}\, d\,x$$

$$= \frac{1}{E\,I}\left(\frac{p\,l^2\,x}{8} - \frac{p\,x^3}{6} - M_A\,x + c\right)$$

Slope is o when $x = o$. $\therefore c = o$.

Also slope must be o when $x = \frac{l}{2}$

Digitized by Google

$$\therefore \frac{p\,l^3}{16} - \frac{p\,l^3}{48} - M_A \frac{l}{2} = 0$$

$$i.e., \quad M_A \times \frac{l}{2} = \frac{p\,l^3}{16} - \frac{p\,l^3}{48}$$

$$= \frac{p\,l^2}{24}$$

$$\therefore M_A = \frac{p\,l^2}{12}$$

To obtain the deflection we integrate again, and we get:

$$\text{deflection} = \int\int \frac{M}{E\,I}\,dx$$

$$= \frac{1}{E\,I}\left(\frac{p\,l^2\,x^2}{16} - \frac{p\,x^4}{24} - \frac{M_A\,x^2}{2} + c_1\right)$$

$$= \frac{1}{E\,I}\left(\frac{p\,l^2\,x^2}{16} - \frac{p\,x^4}{24} - \frac{p\,l^2\,x^2}{24} + c_1\right)$$

$$= \frac{1}{E\,I}\left(\frac{p\,l^2\,x^2}{48} - \frac{p\,x^4}{24} + c_1\right)$$

This is 0 when $x = \frac{l}{2}$

$$\therefore \frac{p\,l^4}{192} - \frac{p\,l^4}{384} + c_1 = 0$$

$$\therefore c_1 = -\frac{p\,l^4}{384}$$

$$\therefore \text{When } x = 0, \text{ deflection} = \frac{c_1}{E\,I}$$

$$= -\frac{p\,l^4}{384\,E\,I}$$

$$\therefore \text{Maximum deflection} = \frac{p\,l^4}{384\,E\,I} = \frac{W\,l^3}{384\,E\,I}$$

The B.M. and shear diagrams are then as shown on Fig. 95.

(2) Isolated Central Load on Fixed Beam.—Taking as before a span l and the centre as the origin, if the load is W, for a freely supported beam we have:

$$M_x = \frac{W}{2}\left(\frac{l}{2} - x\right)$$

Digitized by Google

$\therefore$ If the end B.M. due to fixing the ends is M_A, we have for the fixed beam :

$$M_x = \frac{W}{2}\left(\frac{l}{2} - x\right) - M_A$$

$$\therefore \text{ Slope of beam } = \int \frac{M}{E\,I}\,dx$$

$$= \left(\frac{W\,l\,x}{4} - \frac{W\,x^2}{4} - M_A\,x + c_2\right) \times \frac{1}{E\,I}$$

When $x = 0$, slope $= 0$. $\therefore c_2 = 0$.

When $x = \frac{l}{2}$, slope also $= 0$ in this case.

$$\therefore \text{ We have : } \quad 0 = \left(\frac{W\,l^2}{8} - \frac{W\,l^2}{16} - M_A\,\frac{l}{2}\right) \times \frac{1}{E\,I}$$

$$\therefore M_A \cdot \frac{l}{2} = \frac{W\,l^2}{16}$$

$$M_A = \frac{W\,l}{8}$$

To get the deflection we integrate again, then :

$$\text{deflection } = \int\int \frac{M}{E\,I}\,dx$$

$$= \frac{1}{E\,I}\left(\frac{W\,l\,x^2}{8} - \frac{W\,x^3}{12} - \frac{M_A\,x^2}{2} + c_3\right)$$

$$= \frac{1}{E\,I}\left(\frac{W\,l\,x^2}{16} - \frac{W\,x^3}{12} + c_3\right)$$

This is 0 when $x = \frac{l}{2}$.

$$\therefore \frac{W\,l^3}{64} - \frac{W\,l^3}{96} + c_3 = 0$$

$$\therefore c_3 = \frac{-\,W l^3}{192}$$

When $x = 0$, deflection $= \frac{c_3}{E\,I}$

$$\therefore \text{ Maximum deflection } = \frac{W\,l^3}{192\,E\,I}$$

Digitized by Google

*** (3) Fixed Beam with Uniformly Increasing Load.**—Let a span A B of length l have a uniformly increasing load, of zero intensity at the point B, and let the intensity of load at unit distance from B be p units per ft. run. Then taking the end B as origin, we have in the case of the freely supported beam:

$$M_x = \frac{p\,l^2\,x}{6} - \frac{p\,x^3}{6}$$

Now let M_A and M_B be the end B.M.s, then the negative B.M. at distance x from B is equal to:

$$M_B + \frac{(M_A - M_B)}{l} \cdot x$$

$\therefore$ for the fixed beam

$$M_x = \frac{p\,l^2\,x}{6} - \frac{p\,x^3}{6} - M_B - \frac{(M_A - M_B)}{l} \cdot x$$

$$\therefore \text{ Slope of beam } = \int \frac{M}{E\,I} \cdot d\,x$$

$$= \frac{1}{E\,I}\left\{\frac{p\,l^2\,x^2}{12} - \frac{p\,x^4}{24} - M_B\,x - \left(\frac{M_A - M_B}{l}\right)\frac{x^2}{2} + c_4\right\} \ldots (1)$$

When $x = 0$, slope $= 0$. $\therefore c_4 = 0$.

Also when $x = l$, slope $= 0$.

$$\therefore \frac{p\,l^4}{12} - \frac{p\,l^4}{24} - M_B\,l - \frac{(M_A - M_B)\,l^2}{2\,l} = 0$$

$$\therefore -\frac{M_B\,l}{2} - \frac{M_A\,l}{2} = -\frac{p\,l^4}{24}$$

$$\therefore M_A + M_B = \frac{p\,l^3}{12} \quad \ldots\ldots\ldots (2)$$

To get another relation between M_A and M_B, consider the deflection;

$$\text{then deflection } = \int\int \frac{M}{E\,I}\,d\,x$$

$$= \frac{1}{E\,I}\left\{\frac{p\,l^2\,x^3}{36} - \frac{p\,x^5}{120} - \frac{M_B\,x^2}{2} - \left(\frac{M_A - M_B}{l}\right) \cdot \frac{x^3}{6} + c_5\right\} \ldots (3)$$

Deflection $= 0$ when $x = 0$. $\therefore c_5 = 0$.

Also deflection $= 0$ when $x = l$.

Digitized by Google

$$\therefore \frac{p l^5}{36} - \frac{p l^5}{120} - \frac{M_B l^2}{2} - \left(\frac{M_A}{l} - \frac{M_B}{l}\right)\frac{l^3}{6} = 0$$

$$\therefore -\frac{M_B l^2}{2} - \frac{M_A l^2}{6} + \frac{M_B l^2}{6} = \frac{p l^5}{120} - \frac{p l^5}{36}$$

$$\therefore \frac{M_A l^2}{6} + \frac{M_B l^2}{3} = \frac{7 p l^5}{360}$$

$$\therefore M_A + 2 M_B = \frac{7 p l^3}{60} \ldots\ldots\ldots\ldots (4)$$

$\therefore$ Combining (3) and (4) we get:

$$M_B = \frac{7 p l^3}{60} - \frac{p l^3}{12}$$

$$= \frac{p l^3}{30} = \frac{W l}{15}$$

$$\therefore M_A = \frac{p l^3}{12} - \frac{p l^3}{30} = \frac{W l}{10}$$

The B.M. diagram then comes as shown in Fig. 98. In all the above cases we have assumed that the beam is of constant cross section along its length. If such is not the case, the end B.M.s can be found by taking the corrected B.M. diagram as explained in the previous chapter with reference to the deflections.

Advantages and Disadvantages of Fixed Beams.—We have seen that, in the examples that have been considered, a fixed beam is stronger than the corresponding freely supported beam, and that the fixed beam has smaller deflections and is thus more rigid. In most cases, moreover, the maximum B.M. occurs at the abutments, where the beam can be strengthened without adding materially to the bending moments and thus increasing the stresses. In the freely-supported beam, on the other hand, the maximum B.M. occurs at the centre, where an addition of weight to strengthen the section would add materially to the B.M. The reason why such beams are not more commonly adopted is because, in fixing in the ends securely, the tangents at each end to the beam must be *absolutely* horizontal, and any deviation from this will alter the stresses, and any difference of level at the two ends due to unequal settlement would cause considerable stresses in the beam. There is also considerable

Digitized by Google

stress due to change in temperature if the beam is securely built-in to the masonry, and all these points make the actual stresses in any practical case somewhat uncertain, so that many designers do not use this type of beam. All the above objections can be obviated by cutting the beam through at the points of contraflexure and resting the centre portion on the two end portions. The is the principle of the *cantilever girder* construction and for large spans is very economical. This is shown diagrammatically in Fig. 98*a*, in which a fixed beam A B is shown divided

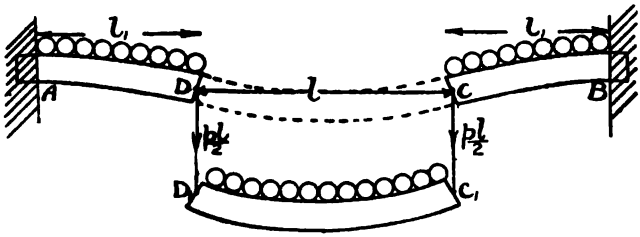

Fig. 98a.

at the points of inflexion C and D and the centre portion is represented as hanging from the end portions. The B.M. in the centre portion will be the same as for a freely-supported beam of span l loaded in the given manner. The B.M. for the cantilever portions will be the same as for cantilevers of span l_1 loaded with the given loading and also with loads at the ends equal to the reactions at the ends of the centre portions. In the figure uniform loading is shown, and in such case these reactions are each equal to $\frac{p\,l}{2}$. It will be found that the resulting B.M. and shear curves obtained in this way will be the same as shown in Fig. 95. The deflections can also be found by adding together the deflections at the centre of the centre portion and at the end of one of the cantilever portions.

Fixed Beam with Ends not at same Level.—Suppose that a fixed beam A B, Fig. 99, has its ends at a different level, then apart from the loading on the beam, the deflected form of the beam will be as shown in the figure, the point of contraflexure being at the centre point C.

Digitized by Google

The deflection $b\,c$ of the portion A C, assuming the beam divided at C, will be equivalent to that due to a weight P hanging downwards at C, but for a cantilever with load at end

$$\delta = \frac{W\,l^3}{3\,E\,I}$$

In this case we have

$$a\,b = \frac{P\left(\frac{l}{2}\right)^3}{3\,E\,I}$$

$$\therefore\ P = \frac{24\,E\,I \times a\,b}{l^3}$$

$$= \frac{12\,E\,I \times c\,f}{l^3}$$

$$= \frac{12\,E\,I \times d}{l^3}$$

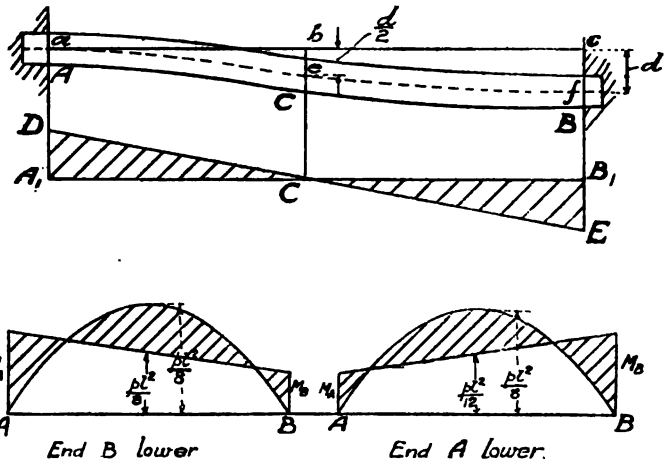

Fig. 99.—Beams with Ends fixed at different Levels.

The B.M. diagram due to this is a triangle C A_1 D, A_1 D being equal to $P \times \frac{l}{2}$

$$\therefore\ A_1\,D = \frac{12\,E\,I \times d}{2\,l^2} = \frac{6\,E\,I\,d}{l^2}$$

Digitized by Google

Similarly the portion C B is as if it had a load P at its end acting upward, the B.M. diagram for this portion being C B_1 E, B_1 E being equal to A_1 D.

Therefore, this diagram must be combined with the ordinary diagram for a fixed beam if the ends are at different levels, the figure showing the effects for the case in which B is lower than A, and also that in which A is lower than B.

The condition that the end B.M. diagram must be equal in area to the free B.M. diagram still holds in this case, but their centroids are not on the same vertical line because there is a resultant deflection at one end.

It can be shown by considering the stability of the imaginary cable of Mohr's Theorem, that E I $\times$ d = area of B.M. curve $\times$ vertical distance between the centroids of the free and end B.M. curves (g).

$$\text{i.e., } \mathrm{E\,I} \times d = \frac{p\,l^2}{12} \times l \times g$$

$$\therefore\ g = \frac{12\,\mathrm{E\,I} \times d}{p\,l^3}$$

Now, if M_A and M_B are the end B.M.s, the end B.M. diagram is a trapezium.

$$\therefore\ g = \frac{l}{2} - \frac{l}{3}\left(\frac{2\,M_B + M_A}{M_B + M_A}\right)$$

$$= \frac{l\,(M_A - M_B)}{6\,(M_B + M_A)}$$

$$\therefore\ M_A - M_B = \frac{6\,(M_B + M_A)\,g}{l} = 6 \times \frac{2\,p\,l^2}{12} \times \frac{g}{l}$$

$$= \frac{12\,\mathrm{E\,I}\,d}{l^2}$$

Now, in the figure $M_A - M_B = 2\ A_1\ D$

$$\therefore\ A_1\ D = \frac{M_A - M_B}{2} = \frac{6\,\mathrm{E\,I}\,d}{l^2}$$

This gives the same result as the previous reasoning.

Beams with Cleat Connections, &c.—In building work the girders are usually connected to the stanchions or columns by means of cleat connections, which, owing to their rigidity, make it doubtful whether the girder will act as a freely supported beam, although their strength is almost invariably calculated as such.

Digitized by Google

Neither is an ordinary cleat sufficiently rigid for the girders to be considered as fixed at their ends. The actual B.M. diagram for such beams will be somewhere between that for a freely supported beam and a fixed beam. It has been suggested that these beams should be treated as 'half fixed,' that is, that the end B.M.s should, in the case of uniform loading, be taken as $\frac{p l^2}{24}$. The B.M. diagram then comes as shown in Fig. 100. It will be noted that the maximum B.M. in this case is still $\frac{p l^2}{12}$ as in the fixed beam, but such B.M. now occurs in the centre.

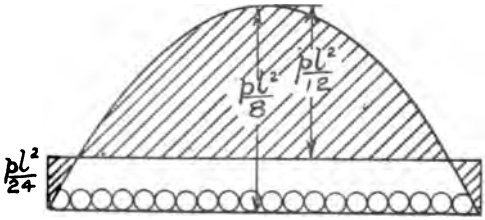

Fig. 100.

In beams where the tensile and compressive strengths of the material are different, as in cast iron and reinforced concrete beams it must be carefully remembered that at the ends, the tension side is at the top, and so the additional strength must be placed at the top at these ends; we shall have further examples of this in the chapter on reinforced concrete.

It must also be carefully remembered that in all the cases we have assumed that the cross section of the beam is constant along its length, and the results obtained will not be true if such is not the case.

CONTINUOUS BEAMS.

If a beam is continuous over a number of supports A, B, C, the deflected form of the beam has to take some shape such as shown in Fig. 101, the curvature changing in direction at the points

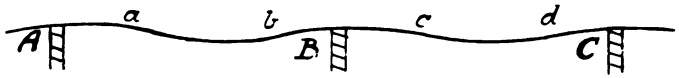

Fig. 101.

Digitized by Google

a, *b*, *c*, *d*. As in the case of fixed beams, this change in the curvature means that a negative bending moment occurs at the supports, such bending moment being called in future the 'support B.M.'

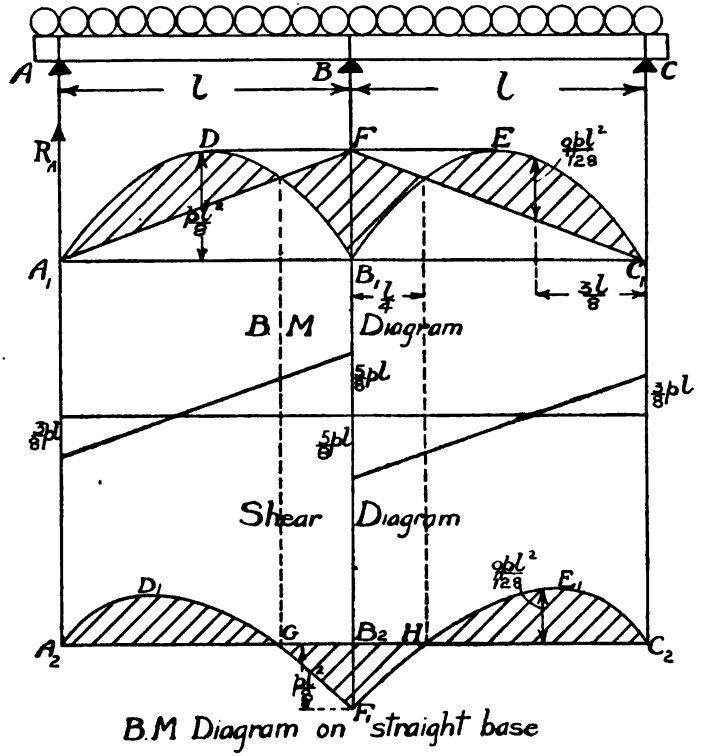

Fig. 102.—*Uniformly Loaded Continuous Beam of two Equal Spans.*

Consider first the case of a continuous girder, A, B, C, Fig. 102, of two equal spans, each of length *l*, subjected to a uniform load of *p* tons per foot run, the supports A, B, and C being on the same level, and the beam being of uniform cross section. Now imagine

Digitized by Google

the centre support removed, then there would be a central deflection δ, given by

$$\delta = \frac{5p(2l)^4}{384\,E\,I}$$

Now, if the centre support be replaced, the pressure R_B on it must be such that as a central load it causes an upward deflection equal to δ.

$$\therefore \delta = \frac{R \times (2l)^3}{48\,E\,I}$$

$$\therefore \frac{R \times (2l)^3}{48\,E\,I} = \frac{5p(2l)^4}{384\,E\,I}$$

$$R = \frac{5p \times 2l}{8} = \frac{5pl}{4}$$

or if W is the load *on one span*, $R = \frac{5W}{4}$

$\therefore$ Since $R_A = R_C$ from symmetry, and $R_A + R_B + R_C = 2W$, we see that $R_A = R_C = \frac{3W}{8} = \frac{3pl}{8}$

In the ordinary case of two separate spans $R_A = R_C = \frac{W}{2}$

$\therefore$ Support B.M. diagram will be as if there were an upward force of $\frac{W}{8}$ acting at A and C. This causes at B a B.M. $= \frac{W}{8} \times l = \frac{Wl}{8}$ so that the negative B.M. at B $= \frac{Wl}{8} = \frac{pl^2}{8}$ and the B.M. diagram for the continuous beam then comes as shown in Fig. 102.

As the reactions are $\frac{3}{8}pl$ at A and C, the shear diagram will have an ordinate equal to $\frac{3}{8}pl$ at these points; the shear then decreases uniformly from C to B until it has a value $-\frac{5}{8}pl$ at B. It then increases to $+\frac{5}{8}pl$, since $R_B = \frac{5}{4}pl$, and then decreases to $-\frac{3}{8}pl$ again at A, the shear diagram then coming as shown in the figure.

The points of contraflexure G, H, where the B.M. is zero, occur at distances $\frac{l}{4}$ from B.

This can be shown as follows:—

Let H be at distance x from C

Digitized by Google

Then negative B.M. due to support B.M. $= \frac{W x}{8} = \frac{p l x}{8}$

positive B.M. for freely supported beam $= \frac{p l x}{2} - \frac{p x^2}{2}$

These must be equal, so that

$$\frac{p l x}{8} = \frac{p l x}{2} - \frac{p x^2}{2}$$

$$\therefore \frac{x}{2} = \frac{l}{2} - \frac{l}{8} = \frac{3 l}{8}$$

$$\therefore x = \frac{3 l}{4}$$

$$\therefore \text{distance from C} = l - \frac{3 l}{4} = \frac{l}{4}$$

If the B.M. diagram be reduced to a straight base, the lower diagram shown on the figure will be obtained.

The maximum intermediate B M.'s will occur at distances $\frac{3 l}{8}$ from C and A.

This will be equal to $\frac{p l}{2} \cdot \frac{3 l}{8} - \frac{p}{2} \cdot \left(\frac{3 l}{8}\right)^2 - \frac{p l}{8} \cdot \frac{3 l}{8}$

$$= p l^2 \left(\frac{3}{16} - \frac{9}{128} - \frac{3}{64}\right)$$

$$= \frac{9 p l^2}{128} = \frac{9 W l}{128}$$

*** Two Equal Uniformly Loaded Spans with Supports not on same Level.**—Now consider the case in which the centre support B is at different level from A and C, and let B be at distance h below A C (Fig. 103).

As before, if the support B is removed, there will be a central deflection $\delta = \frac{5 p (2 l)^4}{384 E I}$

The reaction at B is now only sufficient to cause an upward deflection equal to $\delta - h$.

$$\therefore \delta - h = \frac{R_B (2 l)^3}{48 E I}$$

$$\therefore R_B = \frac{48 E I}{(2 l)^3} (\delta - h)$$

$$= \frac{48 E I}{(2 l)^3} \delta \left(1 - \frac{h}{\delta}\right)$$

Digitized by Google

$$\therefore R = \frac{48 E I}{(2l)^3} \times \frac{5p(2l)^4}{384 E I}\left(1 - \frac{h}{\delta}\right)$$

$$= \frac{5pl}{4}\left(1 - \frac{h}{\delta}\right) \quad \ldots\ldots(1)$$

$$= \frac{5pl}{4} - \frac{5h}{4\delta}$$

$$\therefore R_A = R_C = \frac{3pl}{8} + \frac{5h}{8\delta}$$

$$= \frac{pl}{2} - \frac{pl}{8}\left(1 - \frac{5h}{\delta}\right) \quad \ldots\ldots(2)$$

$\therefore$ Reasoning as before, negative B.M. at B due to the second portion of R_A or R_C

$$= \frac{pl^2}{8}\left(1 - \frac{5h}{\delta}\right)$$

$$i.e., \quad M_B = \frac{pl^2}{8}\left(1 - \frac{5h}{\delta}\right) \quad \ldots\ldots(3)$$

$\therefore$ the B.M. curve will be somewhat as shown shaded, the position of D depending on the value of $\frac{h}{\delta}$.

Now consider the following special values of h.

If $h = 0$, $M_B = \frac{pl^2}{8}$ as in the previous case.

If $h = \frac{\delta}{5}$, $M_B = 0$, and the B.M. diagram is the same as for two simply supported beams.

If $h = \delta$, $M_B = \frac{pl^2}{8}(1 - 5) = \frac{-pl^2}{2}$

This is the same as we should have obtained for a simply supported beam of span $2l$.

Now let $h = \frac{-3\delta}{5}$

Then $M_B = \frac{pl^2}{8}\left(1 + \frac{3}{5}\frac{\delta}{\delta}\right) = \frac{pl^2}{2}$. This is the same as if the supports A and C were removed and the beam were two cantilevers BA and BC. The free deflection at the ends is then $= \frac{pl^4}{8EI}$, and this will be found to be equal to $\frac{3}{5}\delta$.

Digitized by Google

Now h must lie between δ and $-\frac{3\delta}{5}$ for the beam to act as a continuous beam, therefore take points E, E′ on the vertical through B, such that $BE' = BE = \frac{pl^2}{2}$, then the closing line of the B.M. diagram for the continuous beam with the supports at different levels must lie between A E C and A E′ C.

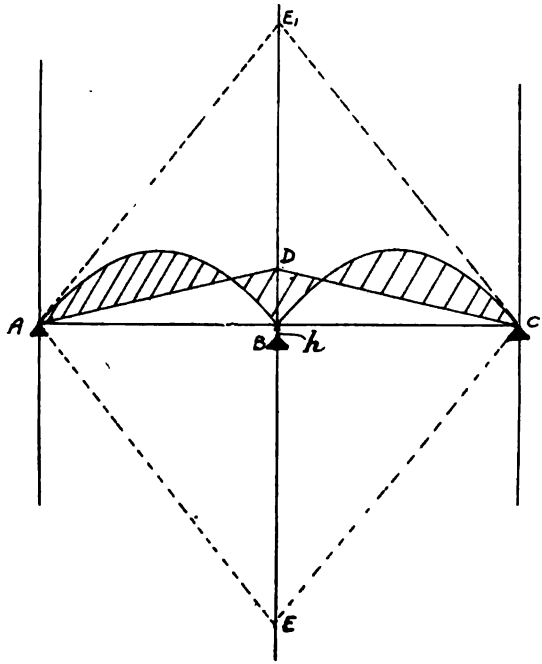

Fig. 103.—*Continuous Beam with three Supports not on same Level.*

The following example on this problem is interesting:

A continuous beam of uniform section and two equal spans l has a uniform load of intensity p, and the supports A B C *are initially level. The support columns are, however, equally elastic, the force necessary to cause unit compression being e. Find the central reaction and B.M.*

Digitized by Google

If the centre column is removed. $\delta = \frac{5 p (2l)^4}{384 E I}$

The upward deflection due to $R_B = \delta_1 = \frac{R_B (2l)^3}{48 E I}$

Then $\delta - \delta_1$ = difference in level between final positions of A, B, and C. Now let $R_B = pl + 2f$. $2f$ being the additional reaction due to the beam being continuous, then

$$R_A = R_C = \frac{pl}{2} - f$$

$$\therefore \text{ Sink of central column} = \frac{pl + 2f}{e}$$

$$\text{Sink of end columns} = \frac{\frac{pl}{2} - f}{e}$$

$$\therefore \text{ Difference} = \delta - \delta_1 = \frac{1}{e}\left(\frac{pl}{2} + 3f\right)$$

$$= \frac{1}{e}\left(\frac{3 R_B}{2} - pl\right)$$

$$\therefore \frac{1}{e}\left(\frac{3 R_B}{2} - pl\right) = \delta - \delta_1$$

$$= \frac{5 p l^4}{24 E I} - \frac{R_B l^3}{6 E I}$$

$$\therefore R_B \left(\frac{l^3}{6 E I} + \frac{3}{2e}\right) = \frac{5 p l^4}{24 E I} + \frac{pl}{e}$$

$$\therefore R_B = \frac{\frac{5 p l^4}{24 E I} + \frac{pl}{e}}{\frac{l^3}{6 E I} + \frac{3}{2e}}$$

$$= pl \left\{ \frac{\frac{5 l^3}{24 E I} + \frac{1}{e}}{\frac{l^3}{6 E I} + \frac{3}{2e}} \right\}$$

$$= pl \left\{ \frac{\frac{5}{4} + \frac{6 E I}{e l^3}}{1 + \frac{9 E I}{e l^3}} \right\}$$

Reasoning as before, we then get

$$M_B = \frac{p l^2}{2} \left\{ \frac{\frac{5}{4} + \frac{6 E I}{e l^3}}{1 + \frac{9 E I}{e l^3}} - 1 \right\}$$

$$= \frac{p l^2}{2} \left\{ \frac{\frac{1}{4} - \frac{3 E I}{e l^3}}{1 + \frac{9 E I}{e l^3}} \right\}$$

It will of course be noted that if the piers had been of the same material and of areas proportional to the reactions, the amount of

Digitized by Google

sinking due to their elasticity would have been equal, and the B.M. diagram therefore would remain as shown in Fig. 102.

* **The Theorem of Three Moments.**—We will now find the relation which must exist between the support bending moments and the loading for a continuous beam of any number of spans, the supports all being on the same level.

Let A B and B C be any two consecutive spans of length l_1 and l_2 of a continuous beam of any number of spans, and let A *e* B, B *f* C (Fig. 104) be the free B.M. diagrams for the loading on these

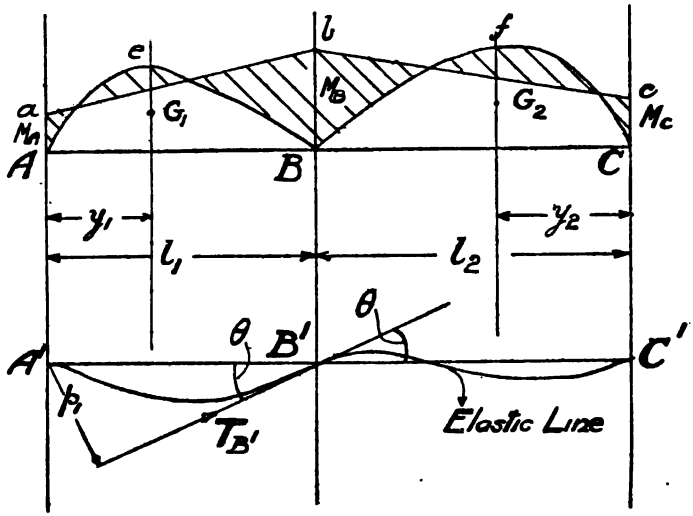

(*Builders' Journal.*)

Fig. 104.—*Theorem of Three Moments.*

spans. Let G_1 and G_2 be the centroids of these free B.M. diagrams, and let them be at distances y_1, y_2 respectively from A and C, the areas of the diagrams being respectively S_1 and S_2. Then, if M_A, M_B, M_C are the support moments at A, B, and C respectively, *Clapeyron's Theorem of Three Moments* states that :

$$M_A l_1 + 2 M_B (l_1 + l_2) + M_C l_2 = 6 \left\{ \frac{S_1 y_1}{l_1} + \frac{S_2 y_2}{l_2} \right\}$$

Digitized by Google

We can prove this with the aid of Mohr's Theorem* as follows: Let A′ B′ C′ be the deflected form or elastic line of the beam, then if the beam is of the same material throughout, and of constant cross section, the elastic line is of the same shape as that of an imaginary cable loaded with the B.M. diagrams and subjected to a horizontal pull equal to E × I. Now the tangent to the imaginary cable is common at the point B′. Let such tangent be at angle θ to the line A′ B′, and let the perpendicular from A′ on to it be of length p_1, the tension in such cable at B′ being $T_{B'}$; then considering the stability of the imaginary cable we have by taking the span A B and taking moments round A′:

$$T_{B'} \times p_1 = \text{moment of B.M. diagram about A'}$$

$$= S_1 y_1 - \text{moment of support B.M. diagram about A'}$$

$$= S_1 y_1 - M_A \frac{l_1}{2} \times \frac{l_1}{3} - M_B \frac{l_1}{2} \times \frac{2 l_1}{3}$$

$$= S_1 y_1 - \frac{M_A l_1^2}{6} - 2 M_B \frac{l_1^2}{6} \quad \ldots\ldots\ldots\ldots\ldots\ldots\ldots\ldots (1)$$

because the support B.M. diagram can be divided with two triangles of area $\frac{M_A l_1}{2}$ and $\frac{M_B l_1}{2}$, the distances of their centroids from A′ being respectively $\frac{l_1}{3}$ and $\frac{2 l_1}{3}$. Now $p_1 = l_1 \sin \theta$, and $T_{B'} = \frac{E I}{\cos \theta}$, E I being the horizontal pull in the cable.

$$\therefore T_{B'} \times p_1 = \frac{E I l_1 \sin \theta}{\cos \theta} = E I l_1 \tan \theta$$

$$\therefore E I l_1 \tan \theta = S_1 y_1 - \frac{M_A l_1^2}{6} - \frac{2 M_B l_1^2}{6}$$

$$\therefore E I \tan \theta = \frac{S_1 y_1}{l_1} - \frac{M_A l_1}{6} - \frac{2 M_B l_1}{6} \quad \ldots\ldots\ldots\ldots (2)$$

Now by considering the second span, as θ is the same for both spans and E I is constant, we get

$$E I \tan \theta = -\left(\frac{S_2 y_2}{l_2} - \frac{M_C l_2}{6} - \frac{2 M_B l_2}{6}\right) \quad \ldots\ldots\ldots\ldots (3)$$

The − sign is used because the moments are taken in opposite directions.

* *See* p. 201.

Digitized by Google

Then combining equations (2) and (3) we get

$$\frac{S_1 y_1}{l_1} - \frac{M_A l_1}{6} - \frac{2 M_B l_1}{6} = -\left(\frac{S_2 y_2}{l_2} - \frac{M_C l_2}{6} - \frac{2 M_B l_2}{6}\right)$$

$$\text{or } M_A l_1 + 2 M_B (l_1 + l_2) + M_C l_2 = 6\left(\frac{S_1 y_1}{l_1} + \frac{S_2 y_2}{l_2}\right) \ldots\ldots (4)$$

This is the general formula applicable for all loadings.

If the loading is uniform over each span and of different intensities p_1 and p_2, we get

$$S_1 = \frac{2}{3} l_1 \cdot \frac{p_1 l_1^2}{8} = \frac{p_1 l_1^3}{12}$$

$$y_1 = \frac{l_1}{2}$$

Similarly

$$S_2 = \frac{p_2 l_2^3}{12}$$

$$y_2 = \frac{l_2}{2}$$

$$\therefore \frac{S_1 y_1}{l_1} + \frac{S_2 y_2}{l_2} = \frac{1}{24}(p_1 l_1^3 + p_2 l_2^3)$$

$\therefore$ In this case we have

$$M_A l_1 + 2 M_B (l_1 + l_2) + M_C l_2 = \frac{1}{4}(p_1 l_1^3 + p_2 l_2^3) \ldots\ldots (5)$$

If the load is of the same intensity p on the two spans we get

$$M_A l_1 + 2 M_B (l_1 + l_2) + M_C l_2 = \frac{p}{4}(l_1^3 + l_2^3) \ldots\ldots\ldots\ldots (6)$$

Reactions and Shear Diagrams.—As in the case of fixed beams, the shear diagrams for continuous beams will have their base lines shifted, due to the change in slope of the B.M. curve.

Consider any support, say B, and let r_1 be the reaction at B due to the span l_1 if the separate spans were simply supported, R_1 being the corresponding quantity for the continuous beam.

Then change in slope of B.M. curve $= \frac{M_B - M_A}{l_1}$

$$\therefore R_1 = r_1 + \frac{M_B - M_A}{l_1}$$

Digitized by Google

Similarly if r_2, R_2 are corresponding quantities for the span l_2

$$\therefore R_2 = r_2 + \frac{M_B - M_A}{l_2}$$

$$\therefore \text{Total reaction at B} = R_B = R_1 + R_2 = r_1 + r_2 + \frac{M_B - M_A}{l_1} + \frac{M_B - M_A}{l_2}$$

Then R_1 and R_2 give the ordinates of the shear diagrams on

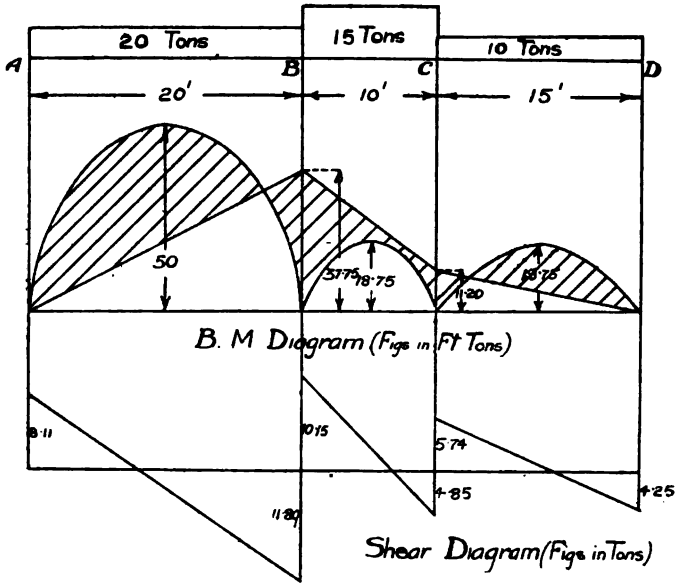

Fig. 105.—*Continuous Beam of Three Spans.*

either side of B. This will be made clearer in the following numerical example :

A continuous girder, A B C D (*Fig.* 105), *consists of three spans*, 20, 10 *and* 15 *ft. long, and the first span carries* 20 *tons, the second* 15 *tons, and the third* 10 *tons, uniformly distributed. Draw the B.M. and shear diagrams.*

First draw the B.M. diagrams as if the separate spans were freely supported.

Now take the first two spans, then by the theorem of three moments

$$M_A \times 20 + 2 M_B \times 30 + M_C \times 10 = \frac{1}{4}\left\{\frac{20}{20} \cdot 20^3 + \frac{15}{10} \cdot 10^3\right\}$$

Digitized by Google

But the end A is freely supported. $\therefore M_A = 0$

$\therefore$ We get $60\ M_B + 10\ M_C = \frac{10^3}{4}\left(8 + \frac{15}{10}\right)$

or $6\ M_B + M_C = 237{\cdot}5$ .....(1)

Now consider the next two spans. Then we have:

$$M_B \times 10 + 2\ M_C \times 25 + M_D \times 15 = \frac{1}{4}\left\{\frac{15}{10} \cdot 10^3 + \frac{10}{15} \cdot 15^3\right\}$$

The end D being freely supported, we have

$$10\ M_B + 50\ M_C = \frac{5^3}{4}\left\{12 + 18\right\}$$

or $M_B + 5\ M_C = 93{\cdot}75$ .....(2)

Solving the two simultaneous equations (1) and (2) we get

$$M_B = 37{\cdot}75$$
$$M_C = 11{\cdot}20$$

$\therefore$ Putting up these values we get the B.M. diagram as shown on the figure.

To get the shear diagram we first calculate the reactions as follows:

$$R_A = \frac{p_1 l_1}{2} + \frac{M_A - M_B}{l_1} = \frac{20}{2} - \frac{37{\cdot}75}{20} = 8{\cdot}11 \text{ tons}$$

$$R_B = \frac{20}{2} + \frac{37{\cdot}75}{20} + \frac{15}{2} + \frac{26{\cdot}55}{10} = 11{\cdot}89 + 10{\cdot}15 = 22{\cdot}04 \text{ tons}$$

$$R_C = \frac{15}{2} - \frac{26{\cdot}55}{10} + \frac{10}{2} + \frac{11{\cdot}20}{15} = 4{\cdot}85 + 5{\cdot}74 = 10{\cdot}59 \text{ tons}$$

$$R_D = \frac{10}{2} - \frac{11{\cdot}20}{15} = 4{\cdot}26 \text{ tons}$$

Total ... ... 45·00 tons

The shear diagram then comes as shown in the figure, the continuity of the beam altering only the base lines, and not the form of the curves.

If there are more than three spans, consecutive spans are taken two together, and a series of equations obtained by the theorem of three moments. Further numerical examples will be found at the end of the chapter.

*** Continuous Beams with Fixed Ends.**—If the end of a continuous beam is fixed, the end B.M. is obtained by imagining a beam to exist beyond the fixed end of the same length, and loaded in the same manner as the last beam. This is because the fixing of ends makes the beam horizontal at such ends, and this

Digitized by Google

occurs at the centre of a continuous beam symmetrically loaded. An example of this will be found in the worked examples at the end of the Chapter.

Equal Spans with constant Uniform Load.—In practice the spans (l) are often equal, and the uniform load (p) per foot run constant, the extreme ends being freely supported. A diagram is shown in Fig. 106, from which the support B.M.s and reactions can readily be obtained for any number of spans up to six.

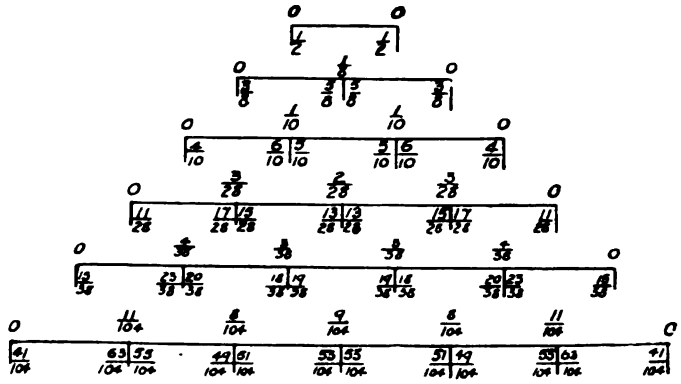

Fig. 106.—*B.M. and Reactions on Uniformly Loaded Continuous Beams of Equal Spans.*

Above the span lines are the support moment coefficients, which have to be multiplied by $p\,l^2$.

Below the span lines are the reaction coefficients, which have to be multiplied by $p\,l$.

From these the B.M. and shear diagrams can be readily drawn. The student should check these by working them through by means of the theorem of three moments.

*GRAPHICAL TREATMENT OF CONTINUOUS BEAMS.

In dealing with a considerable number of spans with irregular loading, the application of the theorem of three moments becomes a somewhat laborious process. Although the following general graphical is somewhat involved and takes considerable time to

Digitized by Google

explain, it is interesting and useful, and shows to what extent the graphical method of reasoning can be pursued.

Consider the imaginary cable of Mohr's theorem which gives the elastic line of a beam. It is a link polygon for the bending moments, drawn with a polar distance equal to E × I.

Now the slope and position of the first and last links of a link polygon are quite independent of the exact distribution of the forces, provided that they have the same resultant in magnitude and direction.

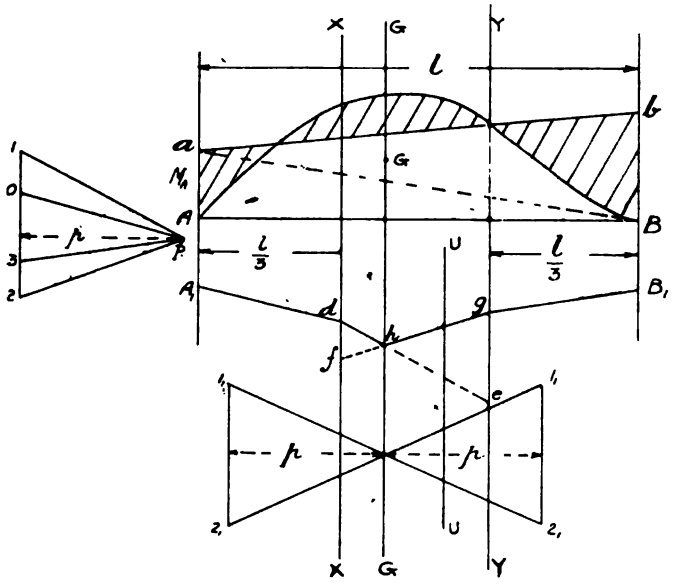

Fig. 107.—*Continuous Beams—Graphical Treatment.*

This will be clear by considering the figure in Chapter III. with reference to this construction.

As we shall see later, we shall be able to obtain the support moments if we know the *support tangents* to the elastic line. Let A B, Fig. 107, represent a span of length *l* of a continuous beam, and let A C B represent the free B.M. curve for the loading on it, A *a* and B *b* being the support moments, M_A and M_B. If the centroid of the curve A C B is G then the vertical G G is called the

Digitized by Google

centroid vertical, and if the support B.M. curve be divided into two triangles A *a* B and B *a b*, the areas of such triangles act down the *right and left hand third lines* X X and Y Y. Now replace the

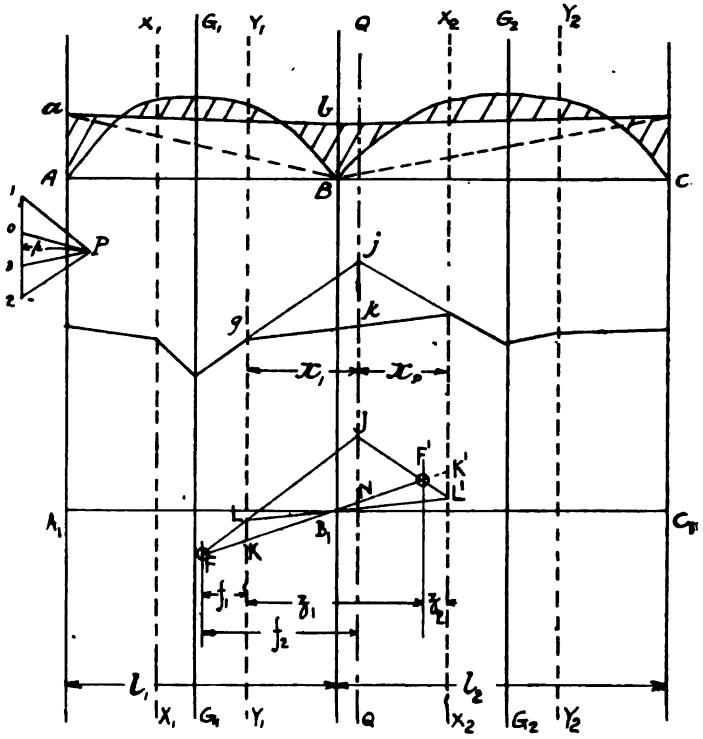

Fig. 108.—*Continuous Beams—Fixed Points.*

actual B.M. curve for purposes of finding the elastic line by single forces acting down and up the lines G G, X X, Y Y.

On a vector line,

set down 1, 2 = area of free B.M. curve A C B = S
„ „ 0, 1 = area of triangle A *a* B = S_A
„ „ 2, 3 = „ „ *a b* B = S_B

Then with pole P at polar distance (p) = E I if A_1 *d* is drawn parallel to 0 P, *d h* to 1 P, *h g* to 2 P and *g* B_1 to 3 P, *d h* and *h g*

Digitized by Google

are called the ***mid links***, and $A_1\ d$ and $g\ B_1$ give the support tangents.

Now in our problem we do not know the position of the points o and 3, and we see that these would be known if the mid links were found, so that our problem now reduces to that of finding these mid links.

On both sides of the centroid vertical G G draw lines at distance p, and set down lengths $1_1\ 2_1$ equal to 1, 2 and join them across, intersecting on the centroid vertical. These lines are called the *cross lines.*

Now draw any vertical U U, then clearly the intercepts made by the vertical on the mid links and cross lines are equal. From this it follows that if a point on one mid link is known, a point vertically below it on the other mid link can be found.

Again, let the right-hand mid link of this span meet the left-hand mid link of the next span in a point j, Fig. 108, on a vertical line Q Q.

Then consider the triangles $g\ j\ k$, P 2, 3.

They are similar $\therefore \dfrac{j\ k}{2,3} = \dfrac{x_1}{p}$

$$\therefore p \times j\ k = 2,3 \times x_1$$
$$= x_1 \times \text{area } b\ a\ \text{B}$$
$$= \frac{M_2\ l_1}{2} \cdot x_1$$

Similarly considering the triangle $g_1\ j\ k$, we should have

$$p \times j\ k = \frac{M_2\ l_2}{2} \cdot x_2$$

Where l_2 is the length of the next span.

$$\therefore x_1\ l_1 = x_2\ l_2$$

$$\text{Further } x_1 + x_2 = \frac{1}{3}(l_1 + l_2)$$

$$\therefore x_1 = \frac{l_2}{3}$$

$$x_2 = \frac{l_1}{3}$$

$\therefore$ Q Q is at a distance $= \dfrac{l_2}{3}$ from Y Y, and is thus called an *inverted third line.*

Digitized by Google

Determination of 'Fixed Points.'—Let A B C, Fig. 108, represent two consecutive spans of a continuous beam, and let the third lines be drawn as shown.

Suppose that we know that the right-hand mid link of the span A B passes through a fixed point F. Let this mid link cut the inverted third line Q Q in J and the third line Y Y in L, then L B′ must be a support tangent. Produce L B′ to meet the first third line of the span B C in L′, then J L′ is the left-hand mid link; and then join F B′ and produce it to meet J L′ in F′, then F′ will be a fixed point on the mid links of the second span. This is shown as follows:

Let the vertical through F′ be at distances z_1, z_2 from the third lines.

Then the triangles F′ J N, F′ K′ L′ are similar.

$$\therefore \frac{\text{J N}}{\text{K′ L′}} = \frac{z_1 - \frac{1}{3} l_2}{z_2} \quad \ldots\ldots\ldots\ldots\ldots\ldots\ldots\ldots (1)$$

and triangles B′ K′ L′, B′ K L are similar.

$$\therefore \frac{\text{K′ L′}}{\text{K L}} = \frac{l_2}{l_1} \quad \ldots\ldots\ldots\ldots\ldots\ldots\ldots\ldots (2)$$

further the triangles F L K, F J N are similar.

$$\therefore \frac{\text{K L}}{\text{J N}} = \frac{f_1}{f_2} \quad \ldots\ldots\ldots\ldots\ldots\ldots\ldots\ldots (3)$$

Multiplying together (1), (2) and (3), we get

$$1 = \frac{z_1 - \frac{1}{3} l_2}{z_2} \times \frac{f_1}{f_2} \times \frac{l_2}{l_1}$$

$$\therefore \frac{z_1 - \frac{1}{3} l_2}{z_2} = \frac{l_1 f_2}{l_2 f_1}$$

$$\text{also } z_1 + z_2 = \frac{l_1 + l_2}{3}$$

$$\therefore z_1 - \tfrac{1}{3} l_2 = - z_2 + \tfrac{1}{3} l_1$$

$$\therefore \frac{- z_2 + \frac{1}{3} l_1}{z_2} = \frac{l_1 f_2}{l_2 f_1}$$

$$\therefore \frac{l_1}{3 z_2} = 1 + \frac{l_1 f_2}{l_2 f_1}$$

$$\therefore z_2 = \frac{\frac{1}{3} l_1 l_2 f_1}{l_1 f_2 + l_2 f_1} = \text{constant.}$$

$\therefore$ F′ is a fixed point.

Digitized by Google

In this way a number of fixed points right along the various spans can be found as hereinafter further explained.

A fixed point is found at the terminal spans, as follows :

CASE (1). FREELY SUPPORTED END.—The end B.M. here must be zero, therefore, support tangent and mid link must be collinear, so that A′ is the first fixed point.

CASE (2). BUILT-IN OR FIXED END.—Support tangent is horizontal, so that first fixed point is where horizontal through A′ cuts the first third line.

Graphical Construction for any Given Case.—We are now in a position to set out the construction for obtaining the B.M. diagram, which is as follows :

Draw the free B.M. diagrams and the third lines, the inverted third lines and the centroid verticals. Fig. 109, shows a continuous beam of three spans, one end being freely supported and the other fixed, X X representing the left-hand third lines, Y Y the right-hand third lines, Q Q the inverted third lines, G G the centroid verticals.

Now draw the cross lines at the bottom of the paper, such lines being obtained by setting down the areas S_1, S_2, &c., of the free B.M. curves on vertical lines at each side of the centroid verticals at distances representing the value of E I reduced in some convenient ratio, the scale of E I being the same as that of the areas. If the support moments only are required and not the deflections, and E I is the same for each span, E I need not be calculated, any convenient polar distance being taken.

P, P_1, and P_2 are the intersections of the cross lines.

Now find the fixed points. The end A is fixed, so that F is the first fixed point; now set down F F′ equal to the intercept ff_1 on the cross lines and draw any line F′ J_1 to the inverted third line, cutting Y Y in L; join L B′ and produce to meet the third line X_1 X_1 in L_1; then the intersection of L_1 J_1 and E′ B′ gives the fixed point F_1 on the second span. This is repeated as shown, and the points F_1', F_2, F_2' found.

Now start at the other end D. This is freely supported, therefore, as we have seen before, D′ is the first fixed point H_2. By means of the cross lines, we then get the corresponding fixed point H_2', and by repeating the same construction as for the

Digitized by Google

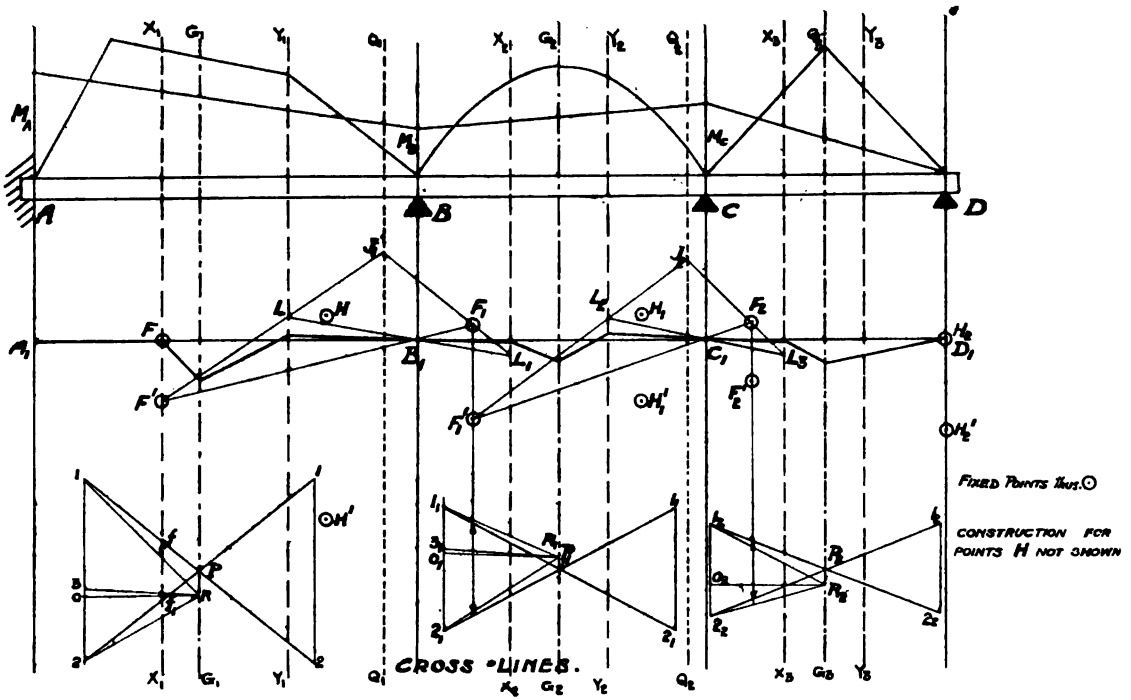

Fig. 109.—*Graphical Investigation of Continuous Beam of three Spans.*

Digitized by Google

points F, we get a number of other fixed points H_1', H_1, H', H. The mid links and support tangents are now drawn in, and there will be two checks on the accuracy of the construction, viz.:

(*a*) Mid links must meet on centroid verticals.

(*b*) When adjacent mid links are joined, they must pass through points of support.

Now, from the points 1, 2, &c., on the cross lines, draw parallels to the support tangents, and obtain the poles R, R_1, R_2 and then draw parallels to the mid links, thus obtaining the points 0, 3, &c. Then

$$M_A = \frac{2 \times 0, 1}{l_1}$$

and so on, the support moments then being set up and the true B.M. curve for the continuous beam thus being found.

Another interesting graphical method of finding the support moments in a continuous beam, has been devised by Professor Claxton Fidler, and will be found in his book on *Bridge Construction.*

Advantages and Disadvantages of Continuous Beams.—It will be seen by considering the B.M. diagrams for continuous beams, that the maximum B.M. is less than that which would occur if a number of separate simply supported beams were placed across the same supports (except in the case of two uniformly loaded equal spans, when it is the same), and that such maximum B.M. occurs at the abutments. The principal disadvantages are:

(*a*) It is not easy to ensure all the supports remaining at exactly the same level.

(*b*) The method of calculation of the stresses assumes that the beam is of uniform cross section throughout, this condition not being an economical one.

(*c*) The method of calculation does not allow for rolling loads which often occur in practice.

Many of these disadvantages can be obviated by making sections through the beam at the points of contraflexure, and resting the centre portions on the support portions, or cantilevers. This is the principle of the cantilever girder bridge, and has been used with great success for bridges of great span. As span of a beam increases, the relative effect of its own weight on the stresses

Digitized by Google

increases rapidly until a span is reached, when it is impossible to use a simply supported beam, because the stresses due to its weight are greater than the allowable stresses. In the case of the cantilever girder bridge, the maximum B.M. occurs at the supports, and it is easier to increase the strength at such portions without adding materially to the B.M. One of the best examples of this is the Forth Bridge, a good account of which is very instructive and interesting, and should be consulted by those who wish to follow the design of bridges of great span.

It is largely on account of the above disadvantages that British designers do not commonly adopt continuous beams, although under favourable conditions they may be safely adopted with considerably increased economy.

Beams Fixed at one End and Freely Supported at the other.—If a beam is fixed at one end and freely supported at the other, the B.M. and shear diagrams will be the same as

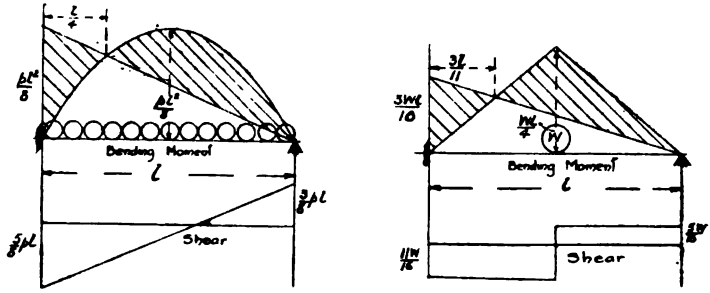

(Builders' Journal.)

Figs. 110 *and* 111.—*Beams Fixed at one End and Supported at the other.*

for the half of a continuous beam of two equal spans of the same span as the given beam, and loaded in the same manner.

This is because fixing the end of a beam makes such end horizontal, and this is what happens at the central support of a continuous beam with two equal spans loaded in the same manner. The consideration of the following two standard cases should make this clear.

(*a*) Beam, Fixed at one end and Freely Supported at the other, Subjected to a Uniform Load.—The B.M.

Digitized by Google

and shear diagrams in this case are the same as for one span of the first case of continuous beams that we have considered, and will therefore be as shown in Fig. 110.

(*b*) BEAM, FIXED AT ONE END AND FREELY SUPPORTED AT THE OTHER, SUBJECTED TO A CENTRAL LOAD.—Let the central load be W and the span *l*.

Then, if B is the fixed end, A the freely supported end, and A′ the imaginary freely supported end existing beyond the fixed end, we have, by the Theorem of Three Moments,

$$M_A l + 2 M_B (l + l) + 2 M_{A'} = 6 \left\{ \frac{W l}{4} \times \frac{l}{2} \times \frac{l}{2 l} + \frac{W l}{4} \times \frac{l}{2} \times \frac{l}{2 l} \right\}$$

Now $M_A = M_{A'} = 0$

$$\therefore 2 M_B . 2 l = 6 \left\{ \frac{W l^3}{16 l} + \frac{W l^3}{16 l} \right\}$$

$$\therefore M_B = \frac{3 W l}{16}$$

The B.M. diagram then comes as shown in Fig. 111.

To get the shear diagram we first work out the reactions.

$$R_A = \frac{W}{2} + \frac{M_A - M_B}{l}$$

$$= \frac{W}{2} - \frac{3 W l}{16 l}$$

$$= \frac{5 W}{16}$$

$$\therefore R_B = \frac{11 W}{16}$$

The shear diagram then comes as shown in the figure.

We will conclude this chapter with a further number of worked examples of fixed and continuous beams.

WORKED EXAMPLES.

(1) *A beam of 20 ft. span is built-in at one end and is supported at a point 5 feet from the other end. Draw the B.M and shear diagrams for a uniform load of ½ ton per foot run.*

Let A B (Fig. 112) be the beam, fixed at the end A and supported at the point C.

The portion B C of the beam acts as a cantilever, and therefore the B.M. at C $= M_C = \frac{1}{2} \times \frac{5}{2} \times 5 = 6{\cdot}25$ ft. tons.

Digitized by Google

To find the B.M. at A, we imagine a span A C′ exactly similar to A C to exist within the wall.

Then, by the Theorem of Three Moments, we have :—

$$M_C \times 15 + 2 M_A (15 + 15) + M_C \cdot 15 = \frac{1}{8}(15^3 + 15^3)$$

but $M_{C'} = M_C = 6{\cdot}25$

$$\therefore 60 M_A + 30 \times 6{\cdot}25 = \frac{1}{8}(2 \times 15^3)$$

$$\therefore 4 M_A + 12{\cdot}5 = \frac{15^2}{4}$$

$$\therefore 4 M_A = \frac{15^2}{4} - 12{\cdot}5$$

$$= 56{\cdot}25 - 12{\cdot}5 = 43{\cdot}75$$

$$\therefore M_A = 10{\cdot}94 \text{ ft. tons nearly.}$$

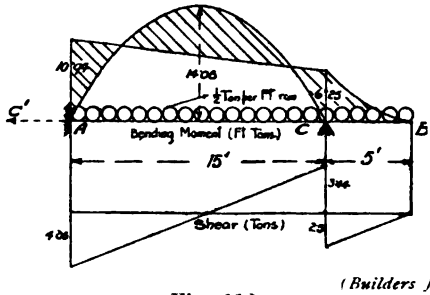

(*Builders Journal.*)

Fig. 112.

The B.M. diagram is then as shown in the figure. To get the reaction at C we proceed exactly as in the case of continuous beams,

$$i.e., R_C = \frac{1}{2} \cdot \frac{15}{2} + \frac{M_C - M_A}{15} + \frac{1}{2} \cdot \frac{5}{2} + \frac{M_C - M_B}{5}$$

$$= 3{\cdot}75 - {\cdot}31 + 1{\cdot}25 + 1{\cdot}25$$

$$= 3{\cdot}44 + 2{\cdot}5$$

$$= 5{\cdot}94 \text{ tons.}$$

The shear diagram then comes as shown in the figure.

(2) *A rolled joist is firmly built-in at one end, and the other end rests freely on the top of a cast-iron column. The span of the joist is* 16 *feet, and it carries a single load of* 10 *tons,* 12 *feet from the column ends. Determine the reaction on the column, and draw the B.M. and shear diagrams. (B.Sc. Lond. 1907).*

Let A B represent the beam, fixed at the end A, the load being at the point C, Fig. 113.

Digitized by Google

Then the free B.M. diagram is a triangle A D B, C D being equal to

$$\frac{W\,a\,b}{l} = \frac{10 \times 12 \times 4}{16} = 30 \text{ ft. tons.}$$

Then area of B.M. diagram $= \frac{1}{2} \times 30 \times 16 = 240$ sq. ft. tons.

The centroid G of the B.M. diagram occurs at a distance $\frac{1}{3}$ E C from E the centre of the beam, *i.e.*, at a distance $9\frac{1}{3}$ ft. from A.

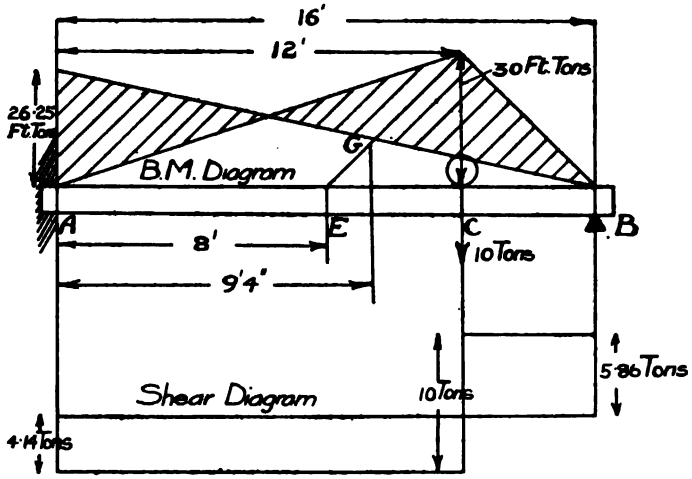

Fig. 113.—*Example of Beam Fixed at one End and Supported at other.*

Then, imagining a span exactly similar to A B to exist beyond the fixed end, we have, by the Theorem of Three Moments,

$$16\,M_B + 2\,M_A\,(16 + 16) + 16\,M_{B'} = 6\left\{\frac{240 \times 9\frac{1}{3}}{16} + \frac{240 \times 9\frac{1}{3}}{16}\right\}$$

$$M_{B'} = H_B = 0$$

$$64\,M_A = \frac{6 \times 2 \times 240 \times 28}{16 \times 3} = 7 \times 240$$

$$M_A = \frac{7 \times 240}{64} = \frac{210}{8}$$

$$= 26{\cdot}25 \text{ ft. tons.}$$

Digitized by Google

The reaction on the end B for a freely supported beam

$$= r_B = \frac{10 \times 12}{16} = 7{\cdot}5 \text{ tons.}$$

$$\therefore \text{ In this case } R_B = r_B + \frac{M_B - M_A}{l}$$

$$= 7{\cdot}5 + \frac{0 - 26{\cdot}25}{16}$$

$$= 7{\cdot}5 - 1{\cdot}64$$

$$= 5{\cdot}86 \text{ tons.}$$

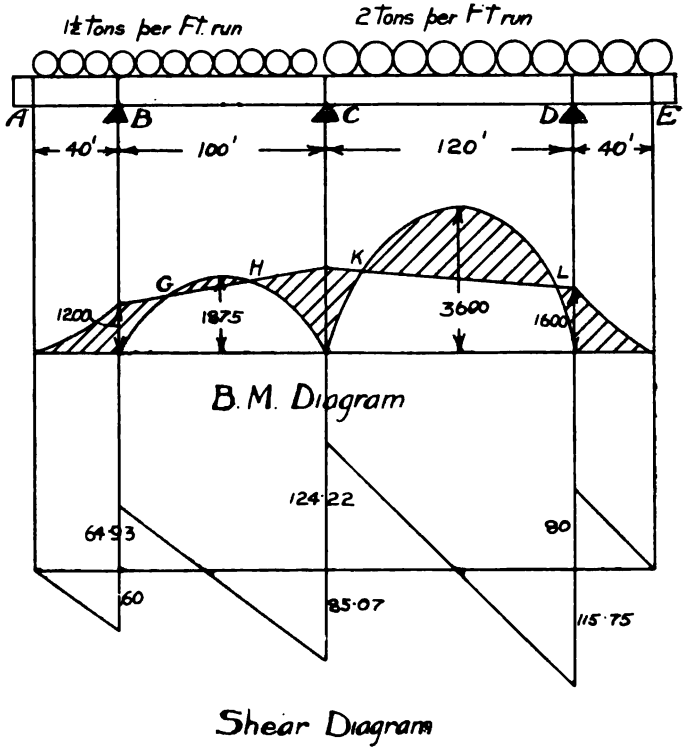

Fig. 114.

(3) *A continuous girder consists of two unequal spans of* 100 *ft. and* 120 *ft. respectively. The girder is* 300 *ft. long and overhangs the end supports at each end, and is loaded as shown (Fig.* 114). *Draw the*

Digitized by Google

B.M. and shear diagrams and show the points of inflexion and magnitude of the supporting forces. (B.Sc. Lond. 1907.)

In this case the end pieces A B, D E act as cantilevers.

$$\therefore M_B = \frac{40 \times 1\frac{1}{2} \times 40}{2} = 1200 \text{ ft. tons.}$$

$$M_D = \frac{40 \times 2 \times 40}{2} = 1600 \text{ ft. tons.}$$

The free B.M. curve for span A C is a parabola with maximum ordinate $= \frac{1\frac{1}{2} \times 100 \times 100}{8} = 1875$ ft. tons.

The free B.M. curve for the span D E is a parabola with maximum ordinate $= \frac{2 \times 120 \times 120}{8} = 3600$ ft. tons.

Then applying the Theorem of Three Moments we have:

$$100 M_B + 2 M_C(100 + 120) + 120 M_D = \frac{1}{4}(1\tfrac{1}{2} \times 100^3 + 2 \times 120^3)$$

$$\therefore 120{,}000 + 440 M_C + 192{,}000 = 375{,}000 + 864{,}000$$

$$440 M_C = 927{,}000$$

$$M_C = 2107 \text{ ft. tons nearly.}$$

We now proceed to the determination of the reactions.

$$R_B = \frac{1}{2} \times 40 \times 1\frac{1}{2} + \frac{M_B - M_A}{40} + \frac{1}{2} \times 100 \times 1\frac{1}{2} + \frac{M_B - M_C}{100}$$

$$= 30 + 30 + 75 - 9{\cdot}07$$

$$= 60 + 64{\cdot}93 \qquad = 124{\cdot}93 \text{ tons}$$

$$R_C = \frac{1}{2} \times 100 \times 1\frac{1}{2} + \frac{M_C - M_B}{100} + \frac{1}{2} \times 2 \times 120 + \frac{M_C - M_D}{120}$$

$$= 75 + 9{\cdot}07 + 120 + 4{\cdot}22$$

$$= 85{\cdot}07 + 124{\cdot}22 \qquad = 209{\cdot}29 \text{ ,,}$$

$$R_D = \frac{1}{2} \times 2 \times 120 + \frac{M_D - M_C}{120} + \frac{1}{2} \times 2 \times 40 + \frac{M_D - M_E}{40}$$

$$= 120 - 4{\cdot}22 + 40 + 40$$

$$= 115{\cdot}78 + 80 \qquad = 195{\cdot}78 \text{ ,,}$$

Total ... 530 tons.

The shear diagrams then come as shown on the figure, and the points G H K L are the points of inflection.

Digitized by Google

(4) *A continuous beam of total length* L *has three spans and is uniformly loaded. Find the most economical arrangement of the spans.*

It follows from symmetry that in the best arrangement, the two end spans will be equal. Let the end spans be of length l_1 and the centre span of length l_2, Fig. 114*a*.

$$\text{Then} \quad L = l_2 + 2\,l_1$$

Now by the Theorem of Three Moments :

$$M_A\,l_1 + 2\,M_B(l_1 + l_2) + M_C\,l_2 = \frac{p}{4}(l_1^3 + l_2^3)$$

From symmetry $M_C = M_B$

also $M_A = 0$.

$$\therefore\ M_B(2\,l_1 + 3\,l_2) = \frac{p}{4}(l_1^3 - l_2^3)$$

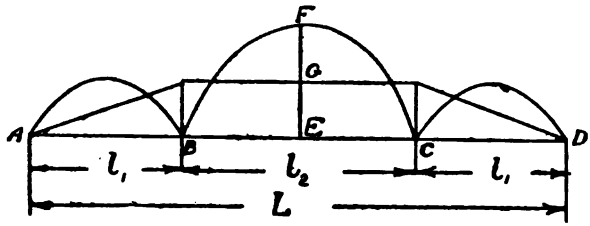

Fig. 114*a*.

We now require to find the relation between l_1 and l_2 to make M_B a minimum, and then see if M_B is then greater than the intermediate B.M.s : if so, this relation will give us the most economical arrangement.

$$M_B = \frac{\frac{p}{4}\left(l_1^3 + l_2^3\right)}{(2\,l_1 + 3\,l_2)}$$

Now $\quad l_2 = L - 2\,l_1$

$$\therefore\ M_B = \frac{\frac{p}{4}\left\{(L - 2\,l_1)^3 + l_1^3\right\}}{(3\,L - 6\,l_1 + 2\,l_1)}$$

This will be a maximum when $\frac{d\,M_B}{d\,l_1} = 0$

i.e., when $\frac{d}{d\,l_1}\left(\frac{L^3 - 6\,L^2\,l_1 + 12\,L\,l_1^2 - 7\,l_1^3}{3\,L - 4\,l_1}\right) = 0$

Digitized by Google

i.e., when $(3\,L - 4\,l_1)(-21\,l_1^2 + 24\,l_1\,L - 6\,L^2)$
$+ 4\,(L^3 - 6\,L^2\,l_1 + 12\,l_1^2\,L - 7\,l_13) = 0$

i.e., $56\,l_1^3 - 111\,L\,l_1^2 + 72\,l_1\,L^2 - 14\,L^3 = 0.$

The solution of this equation will be found to be $l_1 = .35\,L$, such solution being found by plotting.

Thus we see that the least value of the support moments occur when the end spans are each .35 L and the centre .3 L. In this case the intermediate B.M.s are less than the support moments, so that this gives the most economical arrangement.

Digitized by Google

CHAPTER X.

*DISTRIBUTION OF SHEAR STRESSES IN BEAMS.

When a beam is deflected there is a horizontal* shearing stress at every point of the beam, resisting the sliding of one layer over the other. We have already shown (p. 12) that in an elastic material a shear stress must always be accompanied by a shear stress of equal intensity at right angles to it; in the case of the beam we see that the horizontal and vertical shearing stresses at any point of a beam are equal. Now the total shearing force over any vertical cross section of a beam must be equal to the shearing force, obtained, as in previous chapters, by considering the forces on the beam; but the intensity of stress will not be the same across the section, so that by dividing the shearing force S by the area of the cross section A, as is commonly done, we do not get the maximum shear stress.

The existence of the horizontal shearing stress can be seen clearly from the following diagrammatic representation. Fig. 115 A shows a short beam deflected under some loading. Now imagine the beam to be replaced by a number of plates placed one above the other. They then take the form shown at B on the figure, the plates sliding one over the other as shown. The second case will not be nearly as strong as the first case, and it is clear that in case A there must be stresses tending to make one layer slide over the other.

We will now obtain an expression for finding the shearing stress at any point of a beam, and will consider later certain special cases.

General Case.—Let A B, A_1 B_1 (Fig. 116) be two cross sections of a beam at a short distance x apart, and let the cross section of

* We will assume through this investigation that the beam is horizontal. If it is not, the words 'parallel to the axis of the beam' and 'perpendicular to the axis of the beam' should be substituted for 'horizontal' and 'vertical.'

Digitized by Google

such beam be symmetrical about a vertical axis, and let the loading be wholly transverse. Then E C G and $E_1 C_1 G_1$, as we have previously seen, give the intensities of transverse stress at any point. Now consider the portion of the section A B above any line D D. Consider an element of area a at a point P at distance P N from the neutral axis.

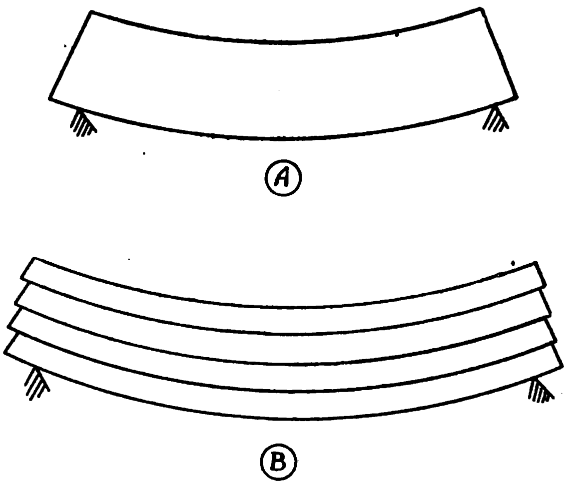

Fig. 115.—*Horizontal Shear in Beams.*

Then we have by the theory of bending that the intensity of stress at P $= f_P = \dfrac{M \times PN}{I}$, where M is the B.M. at the point and I the second moment of the section.

$\therefore$ Force on element $a = f_P \times a = \dfrac{M \times PN}{I} \cdot a$

$\therefore$ Total force on area above D D $= \Sigma \dfrac{M \times PN}{I} \cdot a$

$= F = \dfrac{M}{I} \Sigma a \cdot PN$

$= \dfrac{M}{I} \times$ first moment of area above D D about N.A.

$= \dfrac{M}{I} \times a \cdot y$ ....(1)

Digitized by Google

Where a is the area above D D and y the distance of its centroid from the N.A.

Similarly taking the section A_1 B_1 and taking the force above a line D_1 D_1 we have

$$\text{Total force on area above } D_1 D_1 = F_1 = \frac{M_1}{I_1} \times a_1 y_1$$

Now, if x is small, and the beam has no abrupt change in cross section, we may put $a = a_1$, $y = y_1$, and $I = I_1$.

$$\therefore F - F_1 = \frac{(M - M_1)\, a\, y}{I} \quad \ldots\ldots\ldots\ldots\ldots\ldots (2)$$

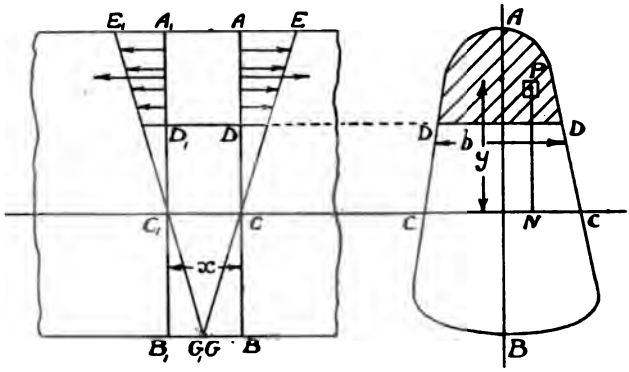

Fig. 116.—*Distribution of Shear.*

Now this difference in transverse force is the shearing force which has to be carried along the line D D_1. We will write this

$$F - F_1 = \frac{(M - M_1)}{x} \cdot \frac{a \cdot y \cdot x}{I}$$

Now, if x is very small, $\frac{M - M_1}{x}$ is the rate of increase or decrease of the B.M., and this we have shown to be equal to the shearing force S at the given point.

$$\therefore \text{We have } F - F_1 = \frac{S \times a \cdot y \cdot x}{I} \quad \ldots\ldots\ldots\ldots\ldots (3)$$

Digitized by Google

Now the area over which this shearing force acts is equal to $D_1 D \times D D = D D \times x = x \times b$.

$\therefore$ Mean shearing stress along D D $= \dfrac{F - F_1}{b\,x}$

$$= \frac{S \times a\,.\,y\,.\,x}{b\,x\,.\,I}$$

$$s_D = \frac{S\,.\,a\,.\,y}{I\,.\,b} \qquad \ldots\ldots\ldots\ldots\ldots\ldots (4)$$

We can express this in terms of the mean stress $m = \dfrac{S}{A}$ over the whole section as follows:—

$$s_D = \frac{S\,.\,a\,.\,y}{A\,.\,k^2\,b}$$

$$= m\,.\,\frac{a\,.\,y}{k^2\,b} \qquad \ldots\ldots\ldots\ldots\ldots\ldots\ldots\ldots (5)$$

It will be noted that $a \times y$ increases up to the neutral axis and then decreases, because the first moment of the area below the N.A. is negative.

We thus see that *the shear stress is a maximum at the neutral axis.*

It must be remembered that s_D gives only the mean shear stress along D D. This stress is not uniform along D D, but for sections which are narrow at the neutral axis, the sections used in practice generally falling under this head, the maximum shear along the neutral axis will be not much greater than the value of s_D at the neutral axis as given by the above result. For sections like the square and the circle the maximum shear along D D will be from 5–10% greater than the mean shear, while for sections such as an oblate ellipse or a broad rectangle the difference may amount to as much as 25%. It is beyond our present scope to go further into the question as to the variation of shear stress along D D, but we should remember that such stress is not uniform; the maximum stress for various cases has been worked out by St. Venant.

Consider the following special cases (Figs. 117, 118).

(1) Rectangular Section.—Mean shear along a line at distance x from N A. of a rectangle of height h and breadth b

$$= s_x = m\,.\,\frac{a\,.\,y}{k^2\,b}$$

Digitized by Google

In this case $a = \left(\frac{h}{2} - x\right) b$

$$y = x + \frac{1}{2}\left(\frac{h}{2} - x\right) = \frac{1}{2}\left(\frac{h}{2} + x\right)$$

$$k^2 = \frac{h^2}{12}$$

$$\therefore s_x = \frac{m \cdot \left(\frac{h}{2} - x\right) b \cdot \frac{1}{2}\left(\frac{h}{2} + x\right)}{\frac{h^3}{12} \cdot b}$$

$$= \frac{6m\left(\frac{h^2}{4} - x^2\right)}{h^2}$$

$$= 6m\left(\frac{1}{4} - \frac{x^2}{h^2}\right)$$

$$= \frac{3m}{2}\left(1 - \frac{4x^2}{h^2}\right)$$

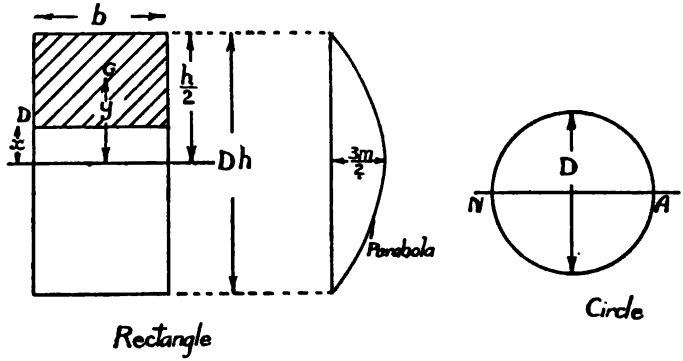

Fig. 117.

This depends on x^2, so that the curve showing the mean shear stress at various depths will be a parabola. The maximum value of s_x occurs when $x = 0$, *i.e.*, at the neutral axis. This gives $s_0 = \frac{3m}{2} = 1{\cdot}5\,m$. Thus we see that in a rectangular beam the maximum shear stress occurs at the centre, and is equal to 1·5 times the shearing force divided by the area of the section.

Digitized by Google

(2) CIRCULAR SECTION.—This case is not quite so simple as the previous case, but we can find the shear stress at the N.A. simply as follows.

In this case we have

$$a = \frac{\pi D^2}{8}$$

$$y = \frac{2D}{3\pi}$$

$$k^2 = \frac{D^2}{16}$$

$$b = D$$

$$\therefore s_{N.A.} = m \frac{\frac{\pi D^2}{8} \cdot \frac{2D}{3\pi}}{\frac{D^2}{16} \cdot D}$$

$$= \frac{4m}{3} = 1{\cdot}33\,m$$

So that the mean shear stress along the N.A. is $1\frac{1}{3}$ times the mean shear stress over the whole section.

In this case it is interesting to note that the *maximum* shear stress along the N.A. is 1·45 m.

(3) PIPE SECTION.—Let a thin pipe be of mean diameter D and thickness *t*.

Then

$$a = \frac{\pi D t}{2}$$

$$y = \frac{D}{\pi}$$

$$k^2 = \frac{D^2}{8}$$

$$b = 2t$$

$$\therefore s_{N.A.} = m \times \frac{\frac{\pi D t}{2} \times \frac{D}{\pi}}{\frac{D^2}{8} \times 2t} = 2m$$

So that the mean shear stress along the N.A. is twice the mean shear stress over the whole section.

Digitized by Google

(4) I SECTION.—To calculate the proportion of the shearing force carried by the flanges and web, respectively.

Take a beam of I section of breadth b and height h, and let the thickness of the flanges and the web be t and w, respectively.

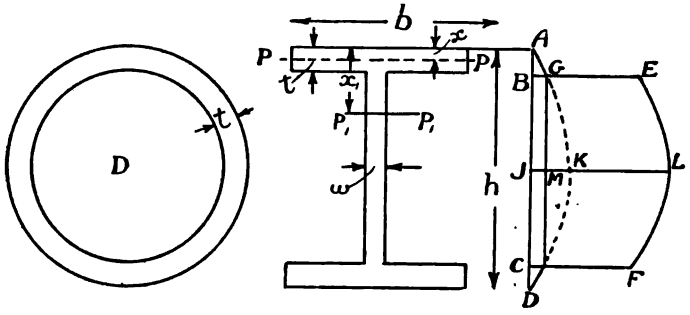

Fig. 118.

First consider a horizontal line P P in the flange at distance x from the top edge, Fig. 118.

Then mean shear along P P $= m \cdot \frac{a \cdot y}{k^2 \cdot b}$

$$= s_x = \frac{m \cdot b}{b} \frac{x}{k^2} \frac{(h - x)}{2}$$

$$= \frac{m}{2 k^2} (h x - x^2) \ldots\ldots\ldots\ldots (1)$$

This depends on x^2, so that the curve showing the variation of stress is a parabola.

When $x = t$, *i.e.*, at the junction of web and flange,

$$s_t = \frac{m}{2 k^2} (h t - t^2) \ldots\ldots\ldots\ldots (2)$$

Now consider a horizontal line P_1 P_1 in the web at distance x_1 from the top.

Then mean shear along P_1 P_1 $= \frac{m \cdot a \cdot y}{k^2 b}$

Digitized by Google

In this case—

$a\,y$ = first moment of area above $P_1\ P_1$ about N.A.

$$= \frac{b\,t\,(h-t)}{2} + w\,(x_1 - t)\left\{\frac{h}{2} - \left(t + \frac{x_1 - t}{2}\right)\right\}$$

$$= \frac{b\,t\,(h-t)}{2} + \frac{w\,(x_1 - t)\,(h - x_1 - t)}{2}$$

also $b = w$ in general expression for shear stress.

$$\therefore\ s_{P_1} = \frac{m}{2\,k^2}\left\{\frac{b\,t\,(h-t)}{w} + w\,\frac{(x_1 - t)\,(h - x_1 - t)}{w}\right\}$$

$$= \frac{m}{2\,k^2}\left\{\frac{b\,t\,(h-t)}{w} + (h\,x_1 - x_1^2 - h\,t + t^2)\right\}$$

$$= \frac{m}{2\,k^2}\left\{(h\,x_1 - x_1^2) + (h - t)\left(\frac{b\,t}{w} - t\right)\right\}$$

$$= \frac{m}{2\,k^2}(h\,x_1 - x_1^2) + \frac{m\,t\,(h-t)\,(b-w)}{2\,k^2\,w} \quad \ldots\ldots\ldots\ (3)$$

The second term of this expression is constant for all values of x_1 and the first term is the shear stress which would occur if the flanges extended down to $P_1\ P_1$.

We thus see that the diagram of distribution stress is obtained as follows:

First draw a parabola A K D, the centre ordinate J K of which is obtained by putting $x = \frac{h}{2}$ in equation (1).

$$i.e.,\quad \text{J K} = \frac{m}{2\,k^2}\left(\frac{h^2}{2} - \frac{h^2}{4}\right) = \frac{m\,h^2}{8\,k^2}$$

At the points B and C corresponding to the inside edges of the flanges set out G E and H F equal to the expression $\frac{m\,t\,(h-t)\,(b-w)}{2\,k^2.\,w}$ and re-draw the portion G K H of the parabola between the points E and F, then the curve A G E L F H D gives the shear stress at the various depths of the cross section.

Then total shear carried by web is equal to area of piece B E L F C of curve multiplied by width of web.

Now take the case in which $t = \frac{h}{10}$ and $w = \frac{h}{20}$ and $b = \frac{h}{2}$,

Digitized by Google

this being about the proportions for a rolled steel joist, then

$$\text{B G} = s_t = \frac{m}{2k^2}(ht - t^2)$$

$$= \frac{m}{2k^2}\left(\frac{h^2}{10} - \frac{h^2}{100}\right)$$

$$= \frac{m}{2k^2} \cdot \frac{9h^2}{100}$$

$$\therefore \text{M K} = \frac{m}{2k^2}\left(\frac{h^2}{4} - \frac{9h^2}{100}\right) = \frac{m}{2k^2} \cdot \frac{16h^2}{100} = \frac{m}{2k^2} \cdot \frac{4h^2}{25}$$

also $$\text{G E} = \frac{mt(h-t)(b-w)}{2k^2 w}$$

$$= \frac{m}{2k^2} \cdot \frac{h}{10} \cdot \frac{9h}{10} \cdot \frac{9h}{20} \times \frac{20}{h}$$

$$= \frac{m}{2k^2} \cdot \frac{81h^2}{100}$$

$$\therefore \text{B E} = \frac{m}{2k^2} \cdot \frac{9h^2}{100} + \frac{m}{2k^2} \cdot \frac{81h^2}{100}$$

$$= \frac{m}{2k^2} \cdot \frac{9h^2}{10}$$

$$\therefore \text{Area of curve B E L F C} = \text{B C}\left(\text{B E} + \frac{2}{3}\text{M K}\right)$$

$$= \frac{4h}{5} \cdot \frac{m}{2k^2}\left(\frac{9h^2}{10} + \frac{8h^2}{75}\right) \quad \ldots\ldots (4)$$

Now in this case $$\text{I} = \frac{bh^3}{12} - \frac{(b-w)(h-2t)^3}{12}$$

$$= \frac{h^4}{24} - \frac{9h}{20} \cdot \left(\frac{4h}{5}\right)^3 \cdot \frac{1}{12}$$

$$= \cdot 0417\, h^4 - \cdot 0192\, h^4$$

$$= \cdot 0225\, h^4$$

The area of the section $= bh - (b-w)(h-2t)$

$$= \text{A} = \frac{h^2}{2} - \frac{9h}{20} \cdot \frac{4h}{5}$$

$$= \cdot 14\, h^2$$

$$\therefore k^2 = \frac{\text{I}}{\text{A}} = \frac{\cdot 0225\, h^4}{\cdot 14\, h^2} = \cdot 1608\, h^2$$

Digitized by Google

Returning to equation (4) we get area of curve B E L F C

$$= \frac{4\,m\,h}{10\,h^2}\left\{\frac{9\,h^2}{10} + \frac{8\,h^2}{75}\right\}$$

$$= \frac{4\,m\,h \times 1{\cdot}007\,h^2}{10 \times {\cdot}1608\,h^2}$$

$$= m\,.\,h \times \frac{4 \times 1{\cdot}007}{1{\cdot}608}$$

$$= 2{\cdot}505\,m\,h \qquad \ldots\ldots (5)$$

$\therefore$ Shear carried by web $= 2{\cdot}505\,m\,h \times$ width of web

$$= 2{\cdot}505\,m\,h \times \frac{h}{20}$$

$$= {\cdot}1252\,m\,h^2 \qquad \ldots\ldots (6)$$

Now area of whole section $= {\cdot}14\,h^2$

$\therefore$ Total shear S on section $= {\cdot}14\,h^2 \times m$

$$\therefore \frac{\text{Shear carried by web}}{\text{Total shear}} = \frac{{\cdot}1252}{{\cdot}14} = 89{\cdot}4\,\%$$

It is commonly assumed in practice that in plate and box girders the whole of the shear is carried by the web, and the above calculation shows that in an I beam, in which the flanges are larger in proportion to the depth than in most plate and box girders, this is true within 10% so that in plate and box girders designed according to the common rules,* this assumption will be quite justified for all practical purposes.

It must, however, be remembered that in girders built up of joists and plates, such as the comparatively shallow and heavy girders used in buildings, that this assumption will not be so nearly true. The error, however, lies on the right side, because the stresses in the web will be less than assumed.

GRAPHICAL TREATMENT FOR FINDING DISTRIBUTION OF SHEAR STRESS ON A CROSS SECTION.

Consider the section, composed of joists and plates, shown in Fig. 119. The first step is to 'mass the section up' about a vertical centre line: this is done by drawing horizontal lines across the joists, and adding on each side of the centre joist the

* See Chapter XVIII.

Digitized by Google

corresponding horizontal ordinate of the outside joists. This gives the section shown in the figure (*i.e.*, $a\,d = a\,b + b\,c + c\,d$).

Consider any line P P. We have shown that the mean shear stress along P P $= s_P = m \cdot \frac{a \cdot y}{k^2 b}$.

Now $a \cdot y$ = first moment of area above P P about neutral axis $x\,x$. Draw the first moment curve of the section above $x\,x$ about the line $x\,x$, as explained on p. 73. As the section is

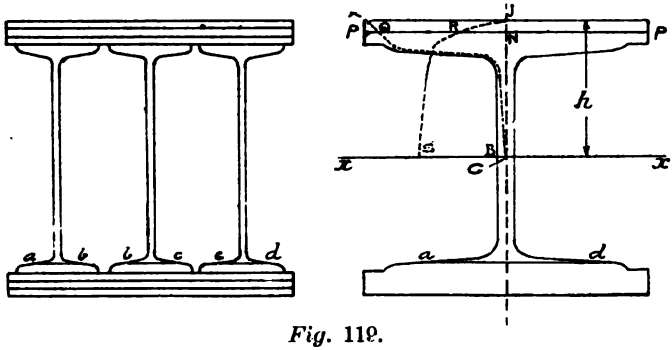

Fig. 119.

symmetrical about a vertical axis, we need draw the curve for one half of the area only, X Q C being such curve.

Then $a \times y = 2$ area J X Q N $\times h$.

$$\therefore \text{ Mean shear along P } P_1 = \frac{m}{k^2 b} \cdot \frac{2 \times \text{J X Q N} \times h}{\text{I}}$$

Now find the sum curve J R S of the first moment curve taking the polar distance $p = \frac{k^2}{h}$.

Then N R $\times p$ = area of first moment curve above P P

$$\therefore \frac{\text{N R} \times k^2}{h} = \text{area J X Q N}$$

$$\therefore \text{ Mean shear along P P} = \frac{m}{b\,k^2} \cdot \frac{2\,\text{N R} \cdot k^2}{h} \times h$$

$$= m \cdot \frac{2\,\text{N R}}{b}$$

$$\text{But } b = \text{P P} = 2\,\text{N P}$$

$$\therefore \text{ Mean shear along P P} = m \cdot \frac{\text{N R}}{\text{N P}}$$

Digitized by Google

Then the maximum shear stress, which occurs at the neutral axis, is $m \cdot \frac{C\ S}{C\ B}$.

NOTE.—Fig. 119 is diagrammatic only and is not drawn to scale. The student should work this case as an example, taking the plates 20" × ½" and 16" × 6" beams. For accuracy the drawing should be done to a large scale.

Deflection of a Beam due to Shear.—In considering the deflections of beams up to the present we have dealt only with the deflection due to the bending moment. We will now see to what extent the deflection due to shear is comparable with that due to the bending moment.

Let c c, Fig. 120, represent a short length x of the centre line of a beam subjected to a shearing stress s.

Then the shear causes the line c c to take the position c c_1, the slope being σ.

Then if G is the shear modulus, we have $\sigma = \frac{s}{G}$.

The deflection c c_1 of the short length of beam is equal to $x \times \sigma$, as σ is small.

$\therefore$ Deflection of short length x of beam $= \frac{x \times s}{G}$

$\therefore$ Total deflection due to shear $= \Sigma \frac{x \times s}{G}$

Now we have shown that $s = m \cdot \frac{a \cdot y}{b\ k^2}$ where $m = \frac{S}{A}$, S being the shearing force at the point, and A the area of the section.

If the section is uniform along its length, $\frac{a \cdot y}{b\ k^2}$ will be constant and equal to, say, β.

$\therefore$ We have: deflection due to shear $= \Sigma\, x \cdot \frac{\beta \cdot S}{A \cdot G}$

$$= \frac{\beta}{A\ G} \Sigma\, x \cdot S$$

But $\Sigma \cdot x\ S$ = area of shear curve up to given point

= B.M. at point

= M

$\therefore$ Deflection due to shear $= \mu = \frac{\beta}{A\ G} \cdot M$ ..... (1)

Digitized by Google

Now consider the following special cases:

(1) Isolated Central Load.

Deflection at centre $= \mu = \frac{\beta}{A\,G} \cdot \frac{W\,l}{4}$

As we have previously shown, the deflection δ in this case due to B.M. is equal to $\frac{W\,l^3}{48\,E\,I}$

$$\therefore \frac{\mu}{\delta} = \frac{\beta}{A\,G} \cdot \frac{W\,l}{4} \div \frac{W\,l^3}{48\,E\,I}$$

$$= \frac{12\,E}{G} \cdot \frac{\beta\,I}{A\,l^2}$$

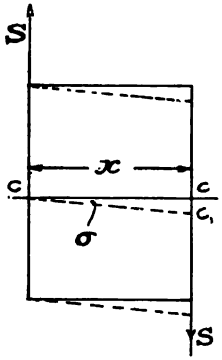

Fig. 120.

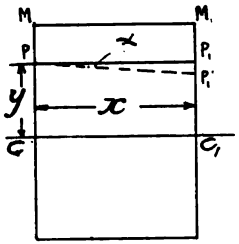

Fig. 121.

Taking $\frac{E}{G} = \frac{5}{2}$ and noting that $I = A\,k^2$

$$\frac{\mu}{\delta} = 30\,\frac{\beta\,k^2}{l^2} \quad \ldots\ldots\ldots\ldots\ldots\ldots (2)$$

(2) Continuous Loading.

In this case $\mu = \frac{\beta}{A\,G} \cdot \frac{W\,l}{8}$

$$\delta = \frac{5\,W\,l^3}{384\,E\,I}$$

$$\therefore \frac{\mu}{\delta} = \frac{48\,\beta}{5} \cdot \frac{E}{G} \cdot \frac{I}{A\,l^2}$$

Digitized by Google

Taking $\frac{E}{G} = \frac{5}{2}$ as before,

$$\frac{\mu}{\delta} = 24\,\beta \cdot \frac{k^2}{l^2} \quad \ldots\ldots\ldots\ldots\ldots\ldots\ldots\ldots\ldots\ldots(3)$$

For rectangular section $\beta = 1{\cdot}5$ and $k^2 = \frac{h^2}{12}$, h being the depth of the beam.

$\therefore$ (2) becomes $\frac{\mu}{\delta} = 3{\cdot}75\left(\frac{h}{l}\right)^2$

(3) becomes $\frac{\mu}{\delta} = 3\left(\frac{h}{l}\right)^2$

It follows from this that if $\frac{h}{l} = \frac{1}{10}$, the deflection due to shear is 3·75 per cent. and 3 per cent. respectively of that due to B.M. in the two cases.

We see, therefore, that for solid rectangular beams in which the span is more than 10 times the depth, the deflection due to shear is negligible.

It must, however, be remembered that for rolled joists, plate girders, and the like, the deflection due to shear will be quite appreciable for sections which are deep compared with their span. Bridge engineers often state that the deflection of a bridge is more than the calculated deflection. Part of this difference may be due to the giving in the riveted connections, but certainly the measured deflection would agree better with the calculated deflection if the latter included the shear deflection. It has been suggested that this could be remedied by taking E about 10,000 tons per sq. in. instead of 12,500 in the ordinary deflection formula.

It should also be noted that we have taken only the strain due to the maximum shear stress, neglecting the fact that it is variable. This gives results a little too high, but is better than taking the mean shear stress.

Distortion of Cross Section of Beam due to Shear, &c.—In finding an expression for the relation between the stresses and the B.M. on a beam, we made use of Bernoulli's assumption, that the cross section remains plane after bending.

The two causes tending to distort the cross section are (1)

Digitized by Google

shear stress, (2) differences in lateral compression due to extension in fibres.

Consider two cross sections of a beam at distance x (Fig. 121) apart, and let the B.M. at the sections be M and M_1 respectively, and consider points P and P_1 at distance y from the centre line, the section being the same at the two points.

$$\text{Then stress at P} = \frac{My}{I}, \text{ at } P_1 = \frac{M_1 y}{I}$$

$$\therefore \text{Lateral compression strain at P} = \eta \frac{My}{EI}, \text{ at } P_1 = \eta \frac{M_1 y}{EI}$$

because longitudinal strain $= \frac{\text{stress}}{E}$ and lateral or transverse strain $= \eta \times$ longitudinal strain.

$$\therefore \text{Difference in lateral compression strain} = \frac{\eta}{EI} \cdot (M_1 - M) y$$

$\therefore$ On a short length dy of the section, the difference in lateral compression $= P' P_1' = \frac{\eta}{EI} \cdot (M_1 - M) \cdot y \cdot dy$

$$\therefore \alpha = \text{slope of } P P_1' = \frac{P' P_1'}{x} = \frac{\eta}{EI} \cdot \frac{M_1 - M}{x} \cdot y \cdot dy$$

but we have shown that when x is very small

$$\frac{M_1 - M}{x} = \text{the shearing force S}$$

$$\therefore \alpha = \frac{\eta}{EI} \cdot S \cdot y \cdot dy.$$

To find the total change in angle between any section and the line originally parallel to the centre line, we must add all the elementary changes in angle.

$$\therefore \text{Total change} = \theta = \frac{S \cdot \eta}{EI} \int y \cdot dy$$

$$= \frac{S \cdot \eta \cdot y^2}{2 E I} = \frac{m \cdot \eta y^2}{2 E k^2},$$

$$\text{because } m = \frac{S}{A}$$

Digitized by Google

Now we have previously shown that due to the shear there is a change of angle equal to $\frac{m \cdot a \cdot y}{G \cdot b \, k^2}$

$\therefore$ Total change due to both causes

$$= \frac{m}{k^2}\left(\frac{a}{b}\frac{y}{G} + \frac{\eta \, y^2}{2 \, E}\right)$$

$$= \frac{m}{G \, k^2}\left(\frac{a \, y}{b} + \frac{\eta \, y^2 \, G}{2 \, E}\right)$$

putting $E = \frac{5 \, G}{2}$ and $\eta = \frac{1}{4}$ this comes to $\frac{m}{G \, k^2}\left(\frac{a \, y}{b} + \frac{y^2}{20}\right)$

From this relation the slope at any portion of the section can be found, and the distorted form of the cross section can be obtained. Our present scope prevents us from dealing with this interesting problem further, but what we have given should serve as an indication of the method in which the problem may be attacked.

Digitized by Google

Summary of Shear, Bending and Deflections for Beams.

(SPAN L).

Kind of Beam.	Loading.	Max. Shear $= n \cdot L$	Max. B.M. $= m \cdot W L$	Max. Defl. $= r \frac{W L^3}{E I}$
		n	m	r
Simply supported	Uniform ...	$\frac{1}{2}$	$\frac{1}{8}$	$\frac{5}{384}$
,, ...	Central ...	$\frac{1}{2}$	$\frac{1}{4}$	$\frac{1}{48}$
Fixed	Uniform ...	$\frac{1}{2}$	$\frac{1}{12}$	$\frac{1}{384}$
,, ...	Central ...	$\frac{1}{2}$	$\frac{1}{16}$	$\frac{1}{192}$
Cantilever ...	Uniform ...	1	$\frac{1}{2}$	$\frac{1}{8}$
,, ...	At End ...	1	1	$\frac{1}{3}$

Digitized by Google

CHAPTER XI.

FRAMED STRUCTURES.

Introductory.—A theoretical framed structure is built up of a number of straight bars, pin-jointed together at their extremities. If the centre lines of the bars all lie in the same plane, the frame is termed a *plane frame;* if in different planes, it is termed a *space frame.*

For the present, we will deal only with the plane frames.

A framed structure is designed so that, as far as possible, there are only pure tension or compression stresses in its members, bending stresses being obviated. In Continental and American practice it is common to make the framed structures pin-jointed, but in British practice the joints are nearly always riveted. There are points in favour of both systems: In the pin-jointed frames—or *trusses* as they are called—we can determine the stresses in the members with greater certainty than in the case in which the joints are riveted; but on the other hand the pins often become troublesome to design, and in the case of failure of one pin, the structure probably collapses, whereas in a riveted joint we may have warning by the giving of one or two rivets.

In any case, the stresses are always calculated as if the joints were pinned. These joints are often called *nodes.*

Kinds of Framed Structures.—A framed structure may be one of three kinds, viz.: Deficient or under-firm; perfect or firm, and redundant or over-firm.

A *deficient or under-firm* frame is one which has not sufficient bars to keep it in equilibrium for all systems of loading. Such a frame is shown in Fig. 122 (1). For certain values of the forces acting on it, the frame would be in equilibrium, but it would collapse if the forces were changed.

A *perfect or firm frame* is one which has a sufficient number

Digitized by Google

of bars—and no more—to keep it in equilibrium for all systems of loading. Such a frame is shown at (2) in the figure.

A *redundant or over-firm frame* is one which has more bars than are necessary to keep it in equilibrium for all systems of loading. Such a frame is shown at (3) in the figure.

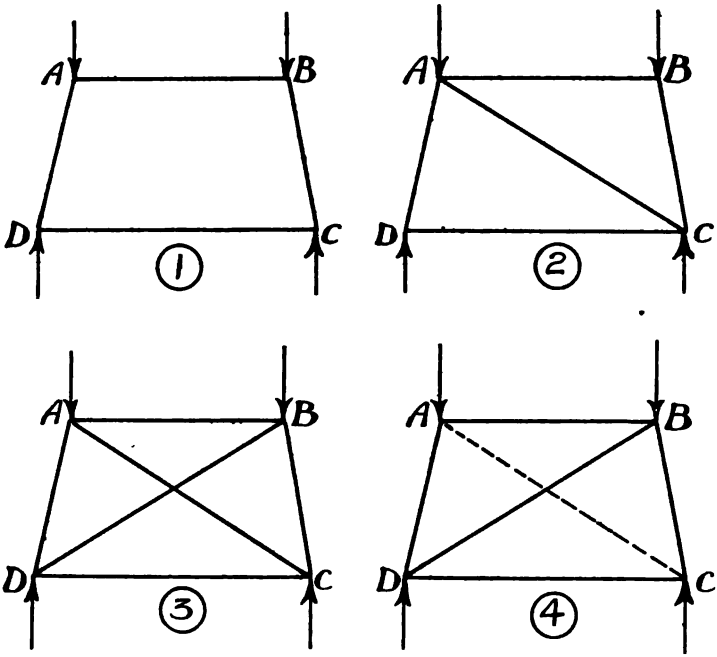

Fig. 122.—Kinds of Framed Structures.

Objections to Deficient and Redundant Frames.—If a deficient frame is actually pin-jointed, it is in unstable equilibrium; if its joints are riveted, then its stability depends on the stiffness of the joints and its members are subjected to bending stresses which it is the object of the framework to avoid. Redundant frames have the following disadvantages:—

(1) Any stress in one member caused by bad fitting or change of temperature causes stresses in all the other members.

Digitized by Google

(2) The stresses in the members cannot be calculated by any simple mathematical or graphical process.

Such frames are sometimes called 'statically indeterminate.' The stresses in the members depend on the relative sizes of such members and the elastic properties of the materials; they can be found by the Principle of Least Work. Our present scope prevents our going further into this, but the reader requiring further information should consult *Statically Indeterminate Structures*, by W. H. Martin, published by *Engineering*.

Semi-member or Counterbraced Frames. — Some frames which have the appearance of redundant frames act as perfect frames and may be treated as such. Fig. 122 (4) shows such a frame. There are two diagonal bars B D and A C, but each can act in tension only, so that if the loading is such as would tend to put one of the diagonals, say A C, in compression, such diagonal would go out of action and the frame would act as if B D were the only diagonal.

The diagonals A C and B D are called *semi-members* or *counterbraces* and are commonly used in practice, especially in the centre panels of railway-bridge trusses in which the crossing of the load causes a reversal of the stress in the diagonals.

Relation between Bars and Nodes in a Perfect or Firm Frame.—Consider a firm frame such as shown at (2).

The first bar D C has 2 nodes.

It requires two more bars A D and A C to produce the next node A, and so on.

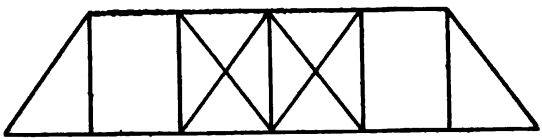

Fig. 123.

Therefore, if there are n nodes, 2 of them go to the first bar and the remaining $(n - 2)$ require $2\ (n - 2)$ bars.

$\therefore$ Total number of bars $= 2\ (n - 2) + 1 = 2\ n - 3$. There-

Digitized by Google

fore, in a perfect or firm frame the number of bars is equal to twice the number of nodes minus 3.

If the number of bars is more than this, the frame is redundant; if less, the frame is deficient.

The student should test this relation with the framed structures shown in the following figures.

The converse of the above statement does not hold. The number of bars might be $= 2n - 3$, and yet the frame might not be perfect.

Fig. 123 gives an example of this. In this case the number of nodes is 12 and the number of bars 21, so that this fulfils the above condition, although it is not a perfect frame.

Ties and Struts.—If a member of a structure is in tension it is called a *tie*, and is designed in the simple manner previously explained; if it is in compression it is called a *strut*, and has to be designed with an allowance for buckling, as will be explained in a subsequent chapter.

It is desirable to distinguish between the ties and the struts in the drawing of a framed structure. This can be done by any of the following ways:—

(1) By drawing the struts in thicker lines than the ties.

(2) By drawing a short single line across the ties and a double line across the struts, *e.g.*, I and II.

(3) By indicating the struts with a *plus* sign and the ties with a *minus*.

Loading of Framed Structures.—Framed structures must always be taken as loaded at the nodes only. If a given bar is loaded between the nodes, then it acts as a beam and distributes to the nodes at each end the reaction of the beam. We will deal further with this question later on.

Curved Members in Framed Structures.—In some cases the members or bars of a framework are curved. For obtaining the forces in the bars (not really the *stresses*, although this term is most often used), we replace the curved bars by straight ones; but it must be carefully remembered that such bars must be designed as bars with eccentric loads and allowance made for bending stresses, as explained on p. 168. See also the example on p. 332.

Digitized by Google

STRESSES IN PERFECT OR FIRM FRAMED STRUCTURES.

When the forces, including the reactions, acting on a perfect frame are known, the stresses in the individual members of the frame can be found by any of the following methods :—

(1) Clerk-Maxwell's Reciprocal Figure method.

(2) The method of Moments or Sections, or Ritter's method.

(3) By resolution.

In any important structure the stresses in all the members are obtained by one of these methods, and those in some of the members are checked by one of the other methods.

RECIPROCAL FIGURES.

Two figures consisting of lines and points lying in a plane are said to be reciprocal when—

(1) To any *node* or point of one figure at which a given number of lines meet, there is a corresponding *polygon* in the other figure, bounded by the same number of sides.

(2) To every line of one figure there corresponds a parallel line in the other figure.

(3) To a line of one figure joining two nodes there corresponds a line in the other figure separating the polygons corresponding to these nodes.

Clerk-Maxwell enunciated the theorem that if one of these figures represents a framework with the forces acting on it, the other or reciprocal figure will give the forces on the framework and the stresses in the individual members.

We see, therefore, that we can find graphically the stresses in a framework by drawing its reciprocal figure.

Example of Simple Roof Truss.—Take the case of the simple roof truss shown in Fig. 124. In this method we will adopt Bow's notation of lettering or numbering the spaces between the bars or forces. In this case we take the vertical loads on the nodes as equal, the reactions then being equal and vertical.

To commence the reciprocal figure set down lengths 1, 2; 2, 3, &c., on a vertical line to represent the forces, to some convenient scale, the reaction 4, 5 being equal to half the total load, and

Digitized by Google

giving the point 5 as shown. At the left-hand end of the truss three lines meet, viz., 5, 1 ; 1, A ; A, 5. On the reciprocal figure, therefore, we require a corresponding triangle, so draw 1, *a* parallel to 1, A, and 5, *a* parallel to 5, A, their point of intersection determining the point *a* on the reciprocal figure. From *a* draw *a b*

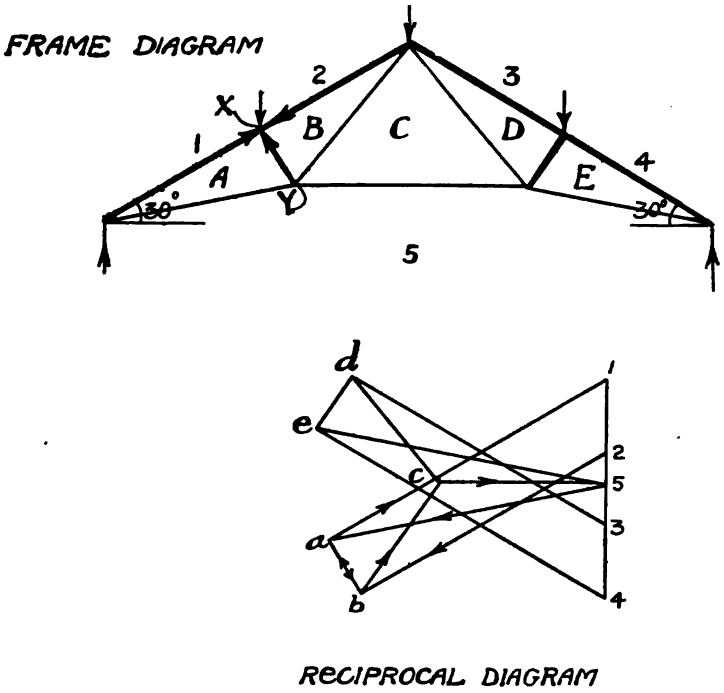

Fig. 124.—*Stresses in Simple Roof Truss.*

parallel to A B, and 2 *b* parallel to 2 B, thus obtaining the point *b* ; then *b c* parallel to B C, and 5 *c* parallel to 5 C, thus obtaining the point *c*, and so on.

To serve as a check on the accuracy of the drawing, the line joining the last point *e* on the reciprocal figure to the point 5 should be parallel to the bar E 5 of the frame.

Then the lengths of the lines of the reciprocal figure give—to

Digitized by Google

the scale to which the loads were set down—the stresses in the corresponding bars of the frame.

To Distinguish between Ties and Struts.—To ascertain which members of a framework are ties and which are struts, the following method is adopted and can be applied for all systems of loading.

Consider any one of the nodes of the truss at which the direction of one force is known, say the node X. Corresponding to this node we have the polygon 1 2 *b a* 1 on the reciprocal figure. The direction of the force 1 2 is known to be vertically downward, so continue the arrow-heads in this direction round the polygon 1 2 *b a* 1. Now transfer the direction of these arrow-heads to the corresponding bars close to the given node. Then if the arrow-head on a given bar points towards the node, the bar is a strut; and if it points away, the bar is a tie. In this way it is seen that the bars 1 A, A B, and B 2 are all struts.

Now consider the node Y. Corresponding to this we have the polygon 5 *a b c* 5. Since A B is a strut, the arrow-head at the node Y points towards the node, and so the arrow heads go round the polygon in the direction *a b*, *b c*, *c* 5, 5 *a*, as shown. Transferring these arrow-heads to the Frame Diagram, we see that the bars B C, C 5, and 5 A are all ties.

With practice one can tell by inspection in most cases whether a given bar is a strut or a tie by the following rule:—If, on imagining the given bar cut through, the forces would tend to increase its length, such bar is a tie; if the forces tend to decrease its length, the bar is a strut.

Example of Warren Girder with Uneven Loading.—As a further example of reciprocal figures, take the example of the Warren girder loaded as shown in Fig. 125.

We must first find the reactions before we can proceed with the reciprocal figure. These reactions, found in the ordinary manner by moments, come 4·75 and 5·25 tons at the left and right hand ends respectively. Choosing a suitable force scale, we set down 1, 2 and 2, 3 to represent 2 and 5 tons respectively; next set up 3, 4 to represent the reaction of 5·25 tons; and then set down 4, 5; 5, 6; and 6, 7 to represent 1 ton each, the length 7, 1 checking back to give the reaction 4·75 tons. We now proceed

Digitized by Google

as before, drawing 1 *a* parallel to 1 A, and 7 *a* parallel to 7 A; then *a b* and 1 *b* parallel respectively to A B and 7 B, and so on, the reciprocal figure coming as shown, and *l* 3 coming parallel to L 3, and thus serving as a check on the drawing.

In cases of complicated frames where some difficulty is experienced of getting the last line to check, it is well to start the

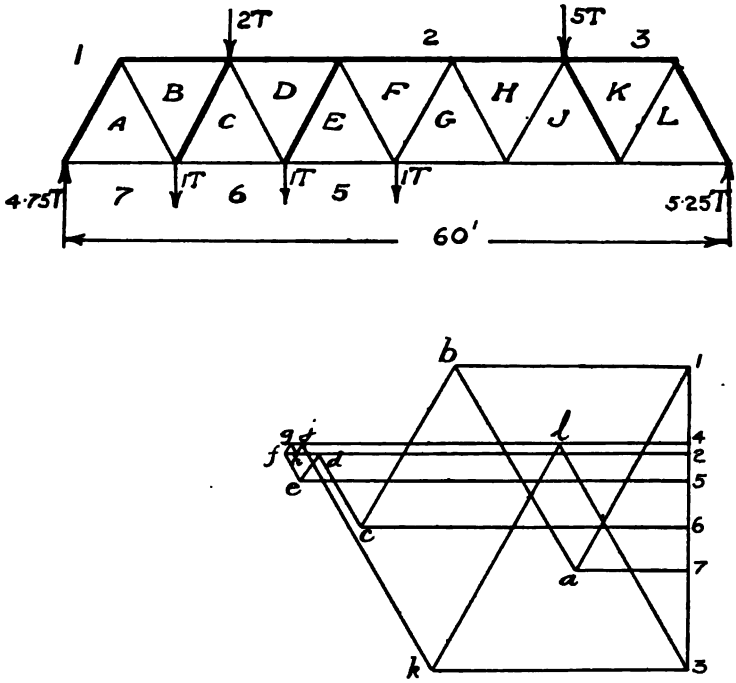

Ftg. 125.— *Warren Girder unevenly Loaded.*

reciprocal figure from each end of the frame, the errors being in this way minimised.

Points of Difficulty in Reciprocal Figures.—In some cases we shall find that when we attempt to draw the reciprocal figure for a framed structure we get to a certain point and can proceed no further. If we start drawing from the other end, we

Digitized by Google

shall get stopped at a corresponding point. This happens whenever we reach a point when there are more than two bars with unknown stresses in them.

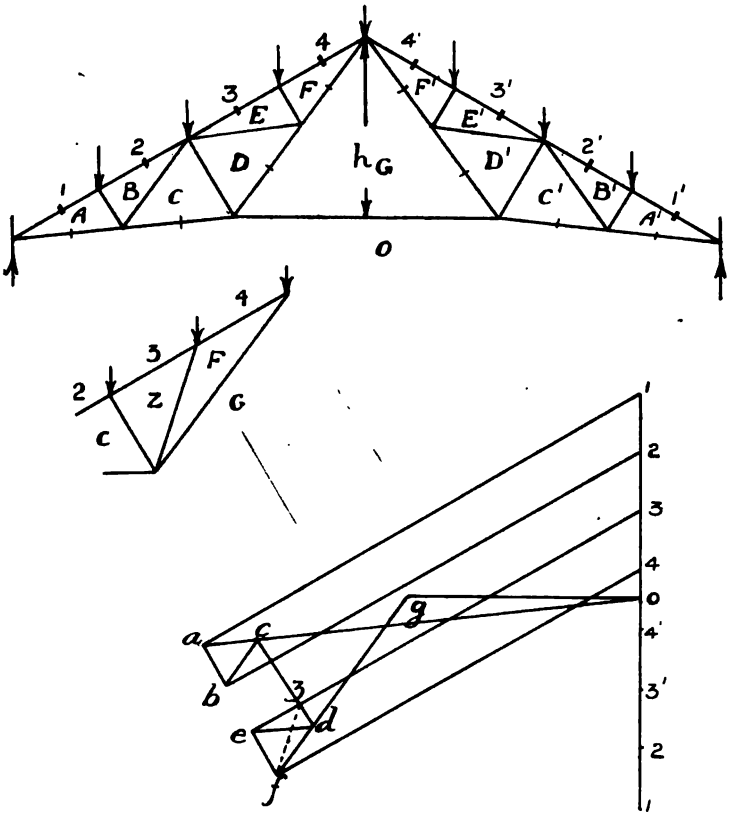

Fig. 126.—*Stresses in French Roof Truss.*

The most common example of this is that of the French truss shown in Fig. 126. For simplicity we will take the loading as uniform, although this is not necessary for the problem. It will be seen that when the point *c* on the reciprocal figure is reached, we cannot proceed further.

Digitized by Google

The difficulty may be overcome by the following methods:—

(1) By calculating the stress in O G by the method of moments, and then working back from the point *g* in the reciprocal figure.

As we shall see later, the stress in O G as determined by the method of moments is equal to $\frac{M}{h}$, where M is the bending moment at the centre of the span due to the forces, and *h* is the height from the bar O G to the ridge. O*g* is then set out on the reciprocal figure to represent this force to the given scale, and the points *f*, *e*, *d* are obtained by working backwards from the point *g*.

(2) By *Barr's method*, according to which the diagonals D E and E F are replaced by a single bar Z F. We can now proceed and find the points *z*, *f*, and *g* on the reciprocal figure. The diagonals D E, E F are now replaced, and by working backwards from the point *f* the points *d*, *e* on the reciprocal figure can be found.

The remaining half of the figure is drawn in exactly the same way, and so is not shown.

It will be found that for uniform loading the lines *a b* and *e f* come in the same straight line, and so the point *f* could be found in this manner, but it must be carefully borne in mind that this rule is not true in the case in which the loading is irregular.

Reciprocal Figures for Various Cases.—Figs. 127-132 show the reciprocal figures for various forms of framed structures.

The student should draw these out to obtain familiarity with the construction.

With regard to the truss shown in Fig. 132, we proceed as follows:—

Consider first the forces on one half of the span. Assuming them uniformly distributed, they are as shown in the figure. Now, since there are pin joints at B and C, the reaction R_B must pass through both B and C, this being the only force on the right; therefore, by joining B C, and producing to meet the resultant force W, and joining such meeting point *x* to A, we get the directions of R_A and R_B, and the reciprocal figure can then be drawn as shown The reciprocal figure is shown in the figure in two parts, one for each half of the truss, to avoid complication of the figure. The stresses are found in a similar manner for the forces on the other side, and the stresses are then added together.

Digitized by Google

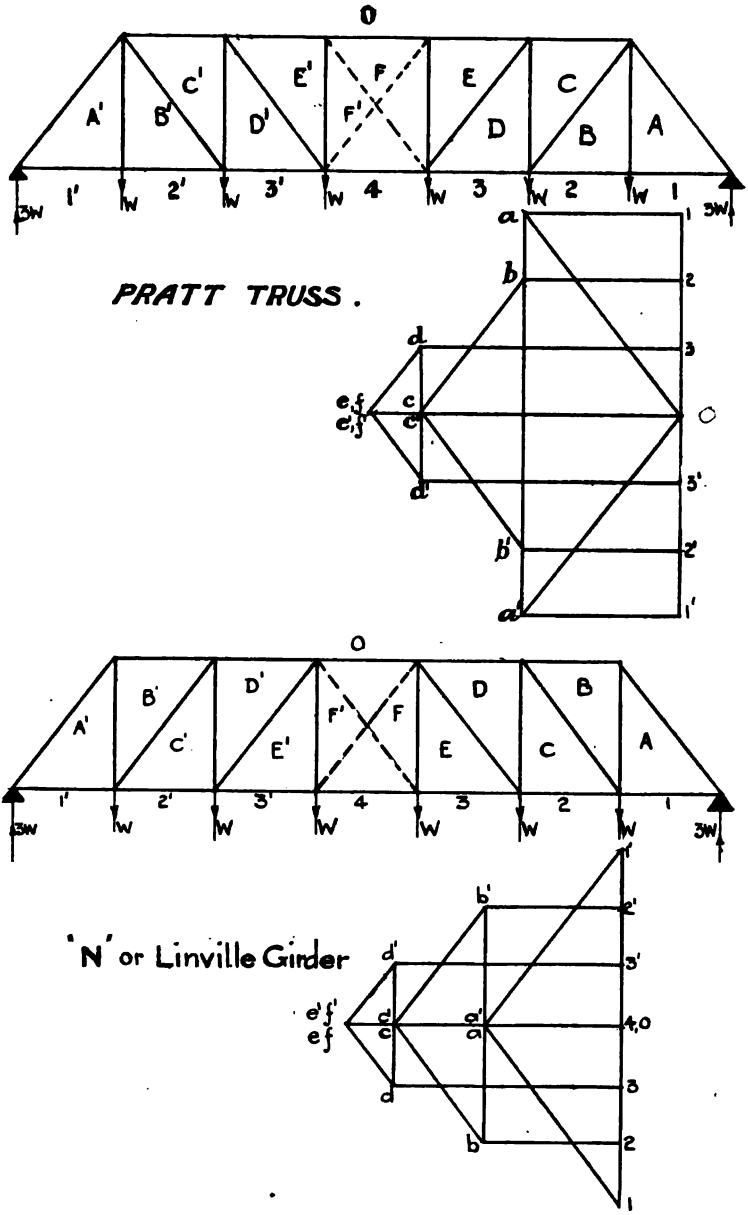

Fig. 127.—Pratt and 'N' Trusses.

Digitized by Google

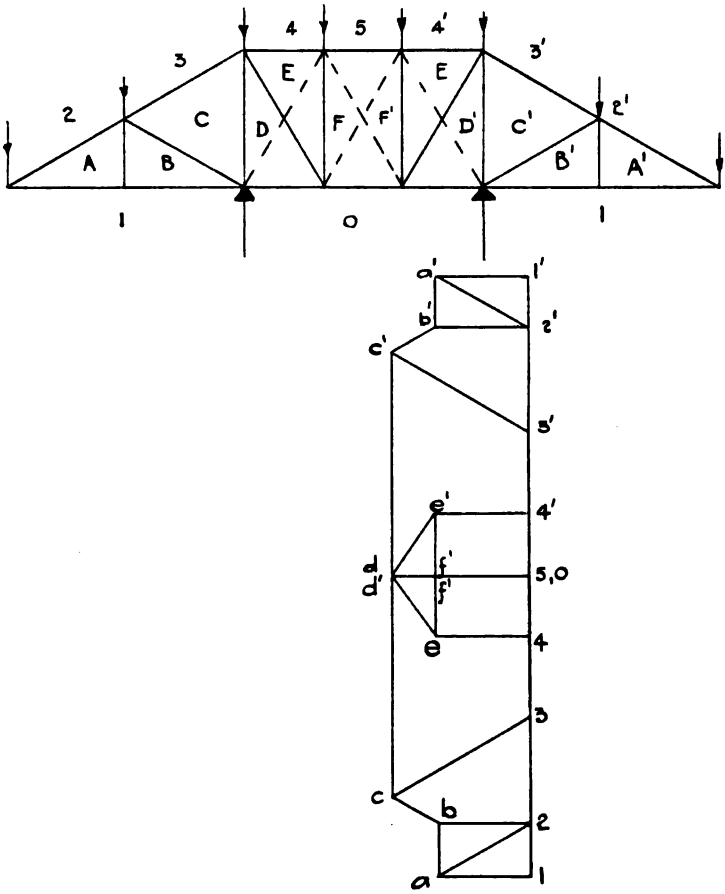

Fig. 128.—Station Roof Truss.

Digitized by Google

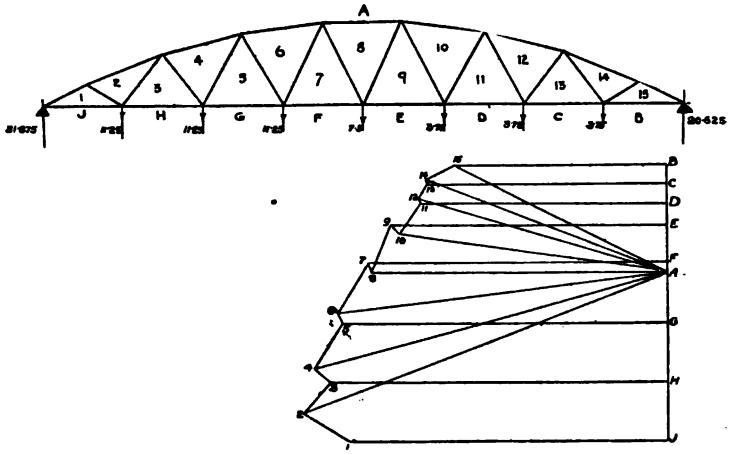

Fig. 129.—*Bowstring Truss with Live Load on Half Span.*

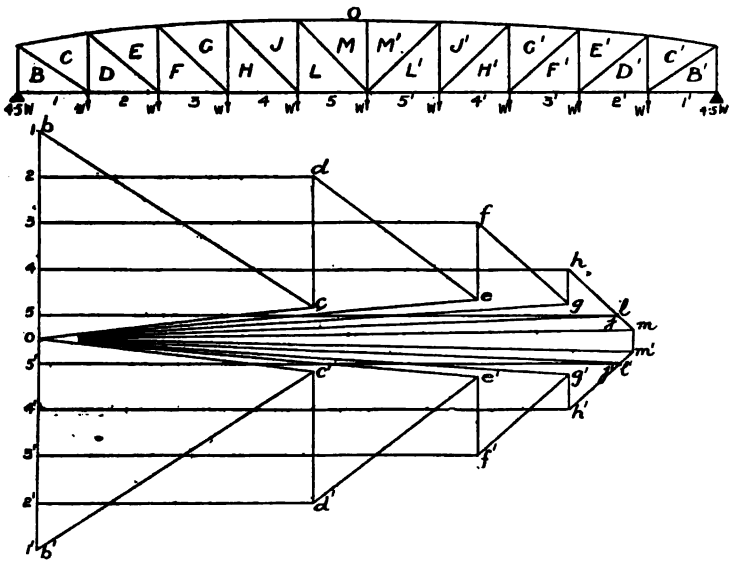

Fig. 130.—*Hog Back 'N' Girder.*

Digitized by Google

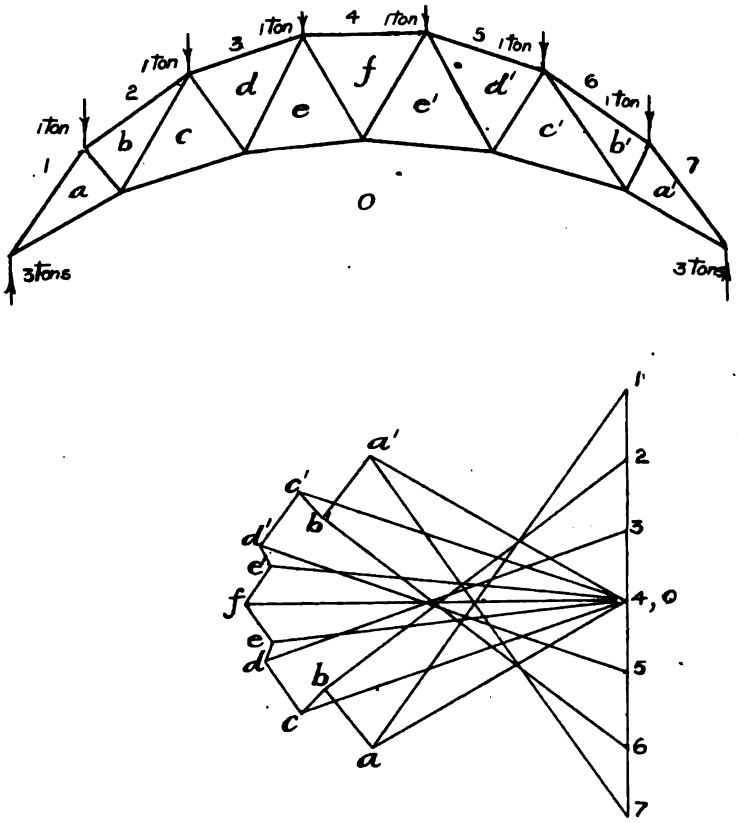

Fig. 131.—*Crescent Roof Truss.*

Digitized by Google

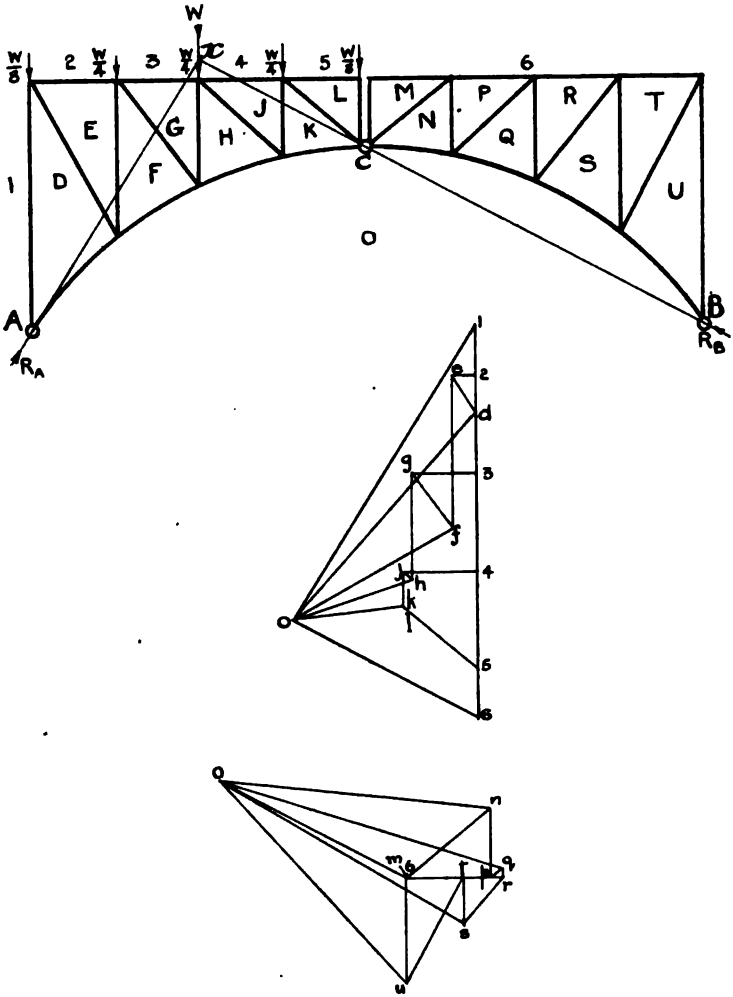

Fig. 132.—*Truss with two portions Pin-jointed together.*

Digitized by Google

Reciprocal Figures for Wind Pressure on Roof Trusses.—In the design of roof trusses of span greater than forty feet, it is necessary to determine the stresses due to the wind blowing on either side. The principal difficulty in obtaining such stresses consists in finding the magnitude and direction of the reactions. There are three principal ways of finding such reactions, viz. :—

(1) Assuming one end of the truss fixed and one end on rollers or 'free,' so that the reaction at the free end is vertical.

(2) Assuming one end of the truss fixed and the other end to rest on a metal plate, so that the reaction at such end is inclined to the vertical at the angle of friction for metal on metal (about 18°).

(3) Assuming each end of the truss fixed and each reaction to be parallel to the resultant wind pressure.

Now it is most common in practice for no provision to be made for movement of one end of the truss, although in some instances rollers are provided at one end and in more instances the holding-down bolts are placed in slotted holes. It would therefore at first sight appear that, in the cases where no such provision is made, the third method above would be the most satisfactory. But even in these cases we prefer to use the first method ; because even if both ends are fixed we cannot say that each end gives equal resistance to the wind, and the stresses according to the first assumption will in most cases be most severe. The first method really assumes that all the resistance to the horizontal forces is given by one end or supporting wall or column, whereas the third method assumes that each end gives equal resistance. Having decided on which assumption to make, we then proceed as follows :—

We will take first the case of a roof with a straight rafter. Fig. 133 shows a simple case of this. We will assume that the end A is fixed and that the end B is free, and that the wind is blowing on the fixed end. Having decided on what wind pressure to allow per sq. ft. of vertical surface, we find by the table given on p. 50, the pressure for a surface at inclination θ. Multiplying the pressure by the area exposed to the wind (*i.e.*, length of rafter × distance between trusses or principals) we get the total

Digitized by Google

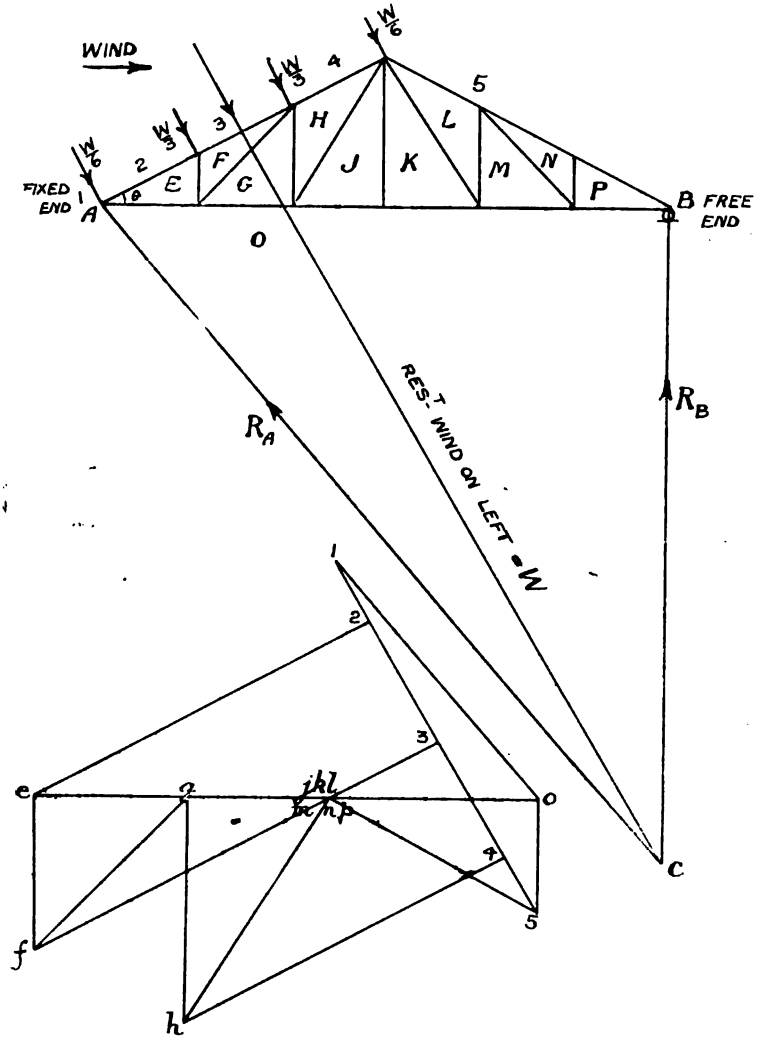

Fig. 133.—*Wind Pressure on Roof Truss.*

Digitized by Google

wind pressure W which acts at right angles to the rafter and at the centre of it.

Now since the end B is free, the reaction R_B at this end must be vertical, so produce the resultant wind pressure W to meet the vertical through B in C. The only forces on the structure are the wind pressure W and the two reactions R_A and R_B, so that since three forces in equilibrium must meet in a point, R_A must also pass through C, *i.e.*, A C gives the direction of R_A.

The wind pressure is considered as a uniform load, and is thus distributed among the nodes of the rafter in the manner shown on the figure. We are now in a position to draw the reciprocal figure. On a line 1, 5 parallel to the wind pressure set down lengths 1, 2; 2, 3, &c., to represent the wind pressure on each node, and draw 5, o vertical and 1, o parallel to R_A; this determines the point o. Now draw o *e* parallel to o E and 2 *e* parallel to 2 E, and so on. It will be found that the points *j*, *k*, *l*, *m*, *n*, *p* on the reciprocal figure coincide, thus showing that the stress in several of the bars is zero.

Now take the wind blowing from the other side. Fig. 134 shows this case. The point C in this case comes above the point B, and the construction of the reciprocal figure can be followed from the Figure.

Combination of Wind and Dead Load Stresses.—Having obtained the stresses for the dead load and for the wind blowing on either side (this being equivalent to assuming either side of the truss to be fixed), we next have to combine the stresses by tabulating them in the manner indicated as follows:

Member.	Stresses in Tons.				
	Dead Load.	Wind on Right.	Wind on Left.	Max. Stress.	Variation.
R S	+ 2·35	+ 3·3	− 3·05	5·65	6·35

To these is added a column for equivalent dead load if this method of allowing for the variation is adopted as indicated on p. 45.

This method gives the maximum range of stress which can occur according as one side or the other takes the whole of the

Digitized by Google

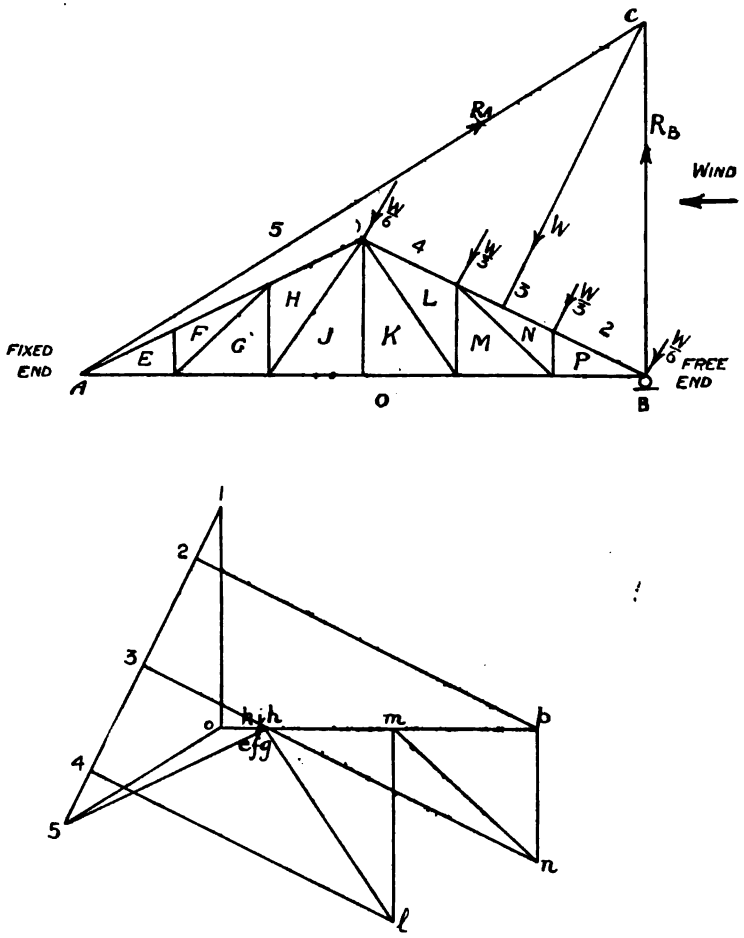

Fig. 134.—*Wind Pressure on Roof Truss.*

horizontal thrust, and is for this reason superior to the method of assuming each end to offer equal resistance.

Combined Stress Diagrams for Dead Load and Wind.—The reciprocal figure can be drawn for the dead load combined with the wind, if desired. To get the maximum stresses

Digitized by Google

and their variation by this method it is necessary to draw two such combined diagrams, corresponding to the wind blowing on either side. It will often be found that the drawing of these two diagrams is more troublesome than drawing the three separate diagrams—one for the dead load alone, and two for the wind on either side.

Fig. 135 shows an example of a combined diagram drawn in this manner.

The resultant of the dead load and wind load for each node is first found as shown in the figure. The reactions have first to be determined, and this is effected best by the link and vector polygon construction as follows: Set the loads down a vector line P, 1, 2, 3 . . . . Q and take any pole O, preferably on the side opposite to that on which the reciprocal figure will come: *then starting at the fixed end* P and drawing the first link parallel to O 1, draw the link polygon P *a*, *b*, *c*, *d*, *e*, *f*; join P *f* and draw O 15 parallel to it, meeting the vertical through Q in 15; then Q_{15} gives the reaction R_Q at Q, and 15 P gives the reaction R_P at P in magnitude and direction. An alternative method which is not so convenient is to find the resultant of all the forces by the link and vector polygon construction, not necessarily starting the link polygon at P, and producing the resultant to meet the vertical reaction as in the previous cases, and thus obtaining the direction of R_P. The reciprocal figure is then drawn without much difficulty; 15, 14 is drawn parallel to 15, 14 and 1, 14 parallel to 1, 14, thus fixing the point 14 and so on, the reciprocal figure being shown in the figure, which also shows the manner in which the question of tie or strut is settled for the node 2, 3, 10, 12, 13.

Wind on Roof with Curved Rafter.—This case is more complicated than the previous ones because the wind pressure will have different intensities according to the slope. The manner in which such a case is worked will be clear from considering Fig. 136. This roof truss is of 50 ft. span and 8 ft. rise, the nodes lying on arcs of circles, the depth of the truss being 8 ft. The end X is fixed and the end Y is free, and the wind is blowing on the fixed end. The inclination of the bays 2 A, 3 B, 4 D are measured and found to be 55°, 37°, and 19°, respectively. Using a vertical pressure of 56 lb. per sq. ft. the pressures on the bars

Digitized by Google

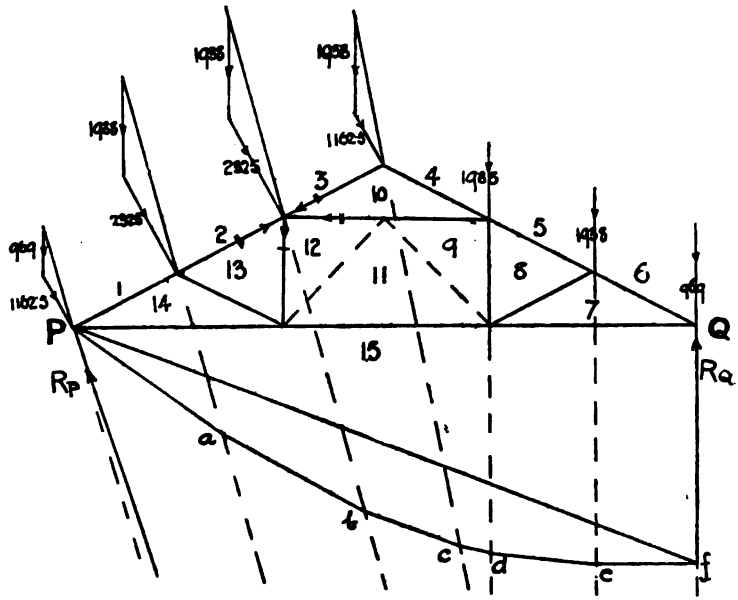

DEAD LOAD AND WIND PRESSURE ON ROOFS: FRAME DIAGRAM.

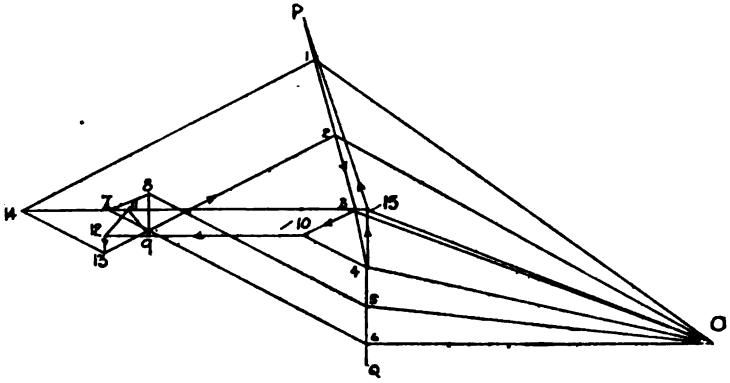

DEAD LOAD AND WIND PRESSURE ON ROOF: VECTOR AND RECIPROCAL DIAGRAMS.

(*Builders' Journal.*)

Fig. 135.

Digitized by Google

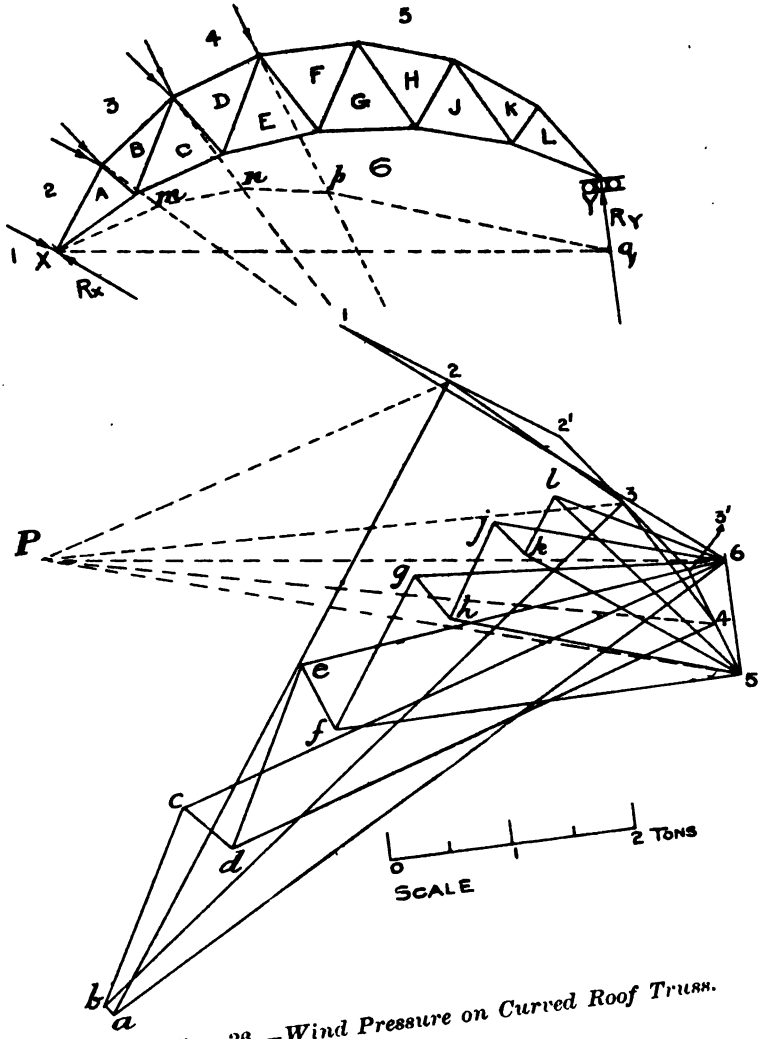

Fig. 36.—Wind Pressure on Curved Roof Truss.

Digitized by Google

—obtained from tables or curves—are 49, 39, and 23 lb. per sq. ft. respectively. Multiplying these by area covered by each bay, *i.e.*, length of bay × distance between principals, the forces carried by each bay are 2, 1·58 and ·94 tons respectively. Placing half of these at the ends of the bays we get the wind forces on the truss. Now set these forces down on a vector line, *i.e.*, $12 = 22' = 1$ ton; $2'3 = 33' = .79$ ton; $3'4 = 45 = .47$ tons; then joining 2, 3; 3, 4 we get the resultant forces 2, 3; 3, 4. To get the values of the reactions we draw parallels through the nodes to the resultant forces at them and take any pole P; then as before we start at X and draw the link polygon X *m*, *n*, *p*, *q*, the first link being parallel to P 2, and draw a parallel through P to X *q* to cut the vertical through 5 in 6, then $56 = R_Y$, $61 = R_X$. Having obtained the point 6 the stress diagram can be drawn without much trouble, but great care must be taken in seeing that long lines such as *2 a* are accurately parallel to their comparatively short bars. In some cases on important work it is advisable to calculate the inclination of such bars in order to get accurate parallels to them.

Loading of Framed Structures.—Local Bending.—It must be very carefully remembered that the stresses in a framed structure obtained by the method just given are worked on the assumption that the loading curves *upon the nodes only*, or that there is no local bending. If in any actual case a load curves upon one of the members between the nodes, then there will be a bending moment on that member, and, treating that member as a beam, the reaction at each end will be treated as the load, at the two nodes, from which the reciprocal diagram is obtained.

Let A B, Fig. 136A, be one of the members of a framed structure, and let a load F be applied at a point C between A and B. Then there will be a bending moment between A and B, the amount of which is easily obtained by projecting horizontally as to the base A_1 B, the maximum B.M. being equal to $\frac{F \cdot a \cdot b}{L}$. By projecting vertically, this B.M. diagram may be placed on A B as shown in the figure. The reactions at A and B for A B considered as a beam are equal to $\frac{W\,b}{L}$ and $\frac{W\,a}{L}$ respectively. Then

Digitized by Google

loads f_A, f_B equal to these are placed on the nodes A and B, and the reciprocal figure is obtained by replacing the load F by loads f_A, f_B. The method of allowing for this should be quite clear from the following example from practice:—

A saw-tooth roof truss, shown in Fig. 137, *is of* 20 *feet span, and carries a uniform load of* 40 *lb. per square foot of ground plan, the principals being* 10 *feet apart. Shafting is carried from the ties, in the position shown, each load being* 10 *cwt. per truss. Draw the stress*

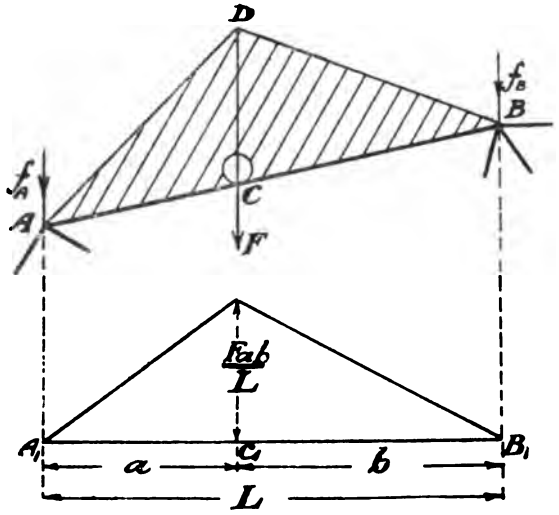

Fig. 136*a.*—*Local Bending in Framed Structures.*

diagram, and find the maximum stresses in the ties if they are of 2 *angles,* $3\frac{1}{2}'' \times 2\frac{1}{2}'' \times \frac{1}{2}''$ *placed* $\frac{3}{4}''$ *apart, with short legs horizontal and at the bottom.*

The total load carried per truss, apart from the shafting, is equal to $40 \times 10 \times 20 = 800$ lb. This is distributed along the rafters as follows:—The bar 2 A carries $5 \times 10 \times 40 = 2000$ lb., 1000 lb. at each end being taken as the load on the two nodes from this. The bar 3 B carries $10 \times 7{\cdot}5 \times 40 = 3000$ lb., half being taken at each end. Thus the load at node 2 A B 3 is 1000 from 2 A and 1500 from 3 B = 2500 in all. The load of 10 cwt. on the bar A 8 will cause a B.M. diagram as shown, and will contribute its reactions, viz., 750 and 370 lb. approximately at its two ends; this makes the total force 1, 2 = 1000 + 750 =

Digitized by Google

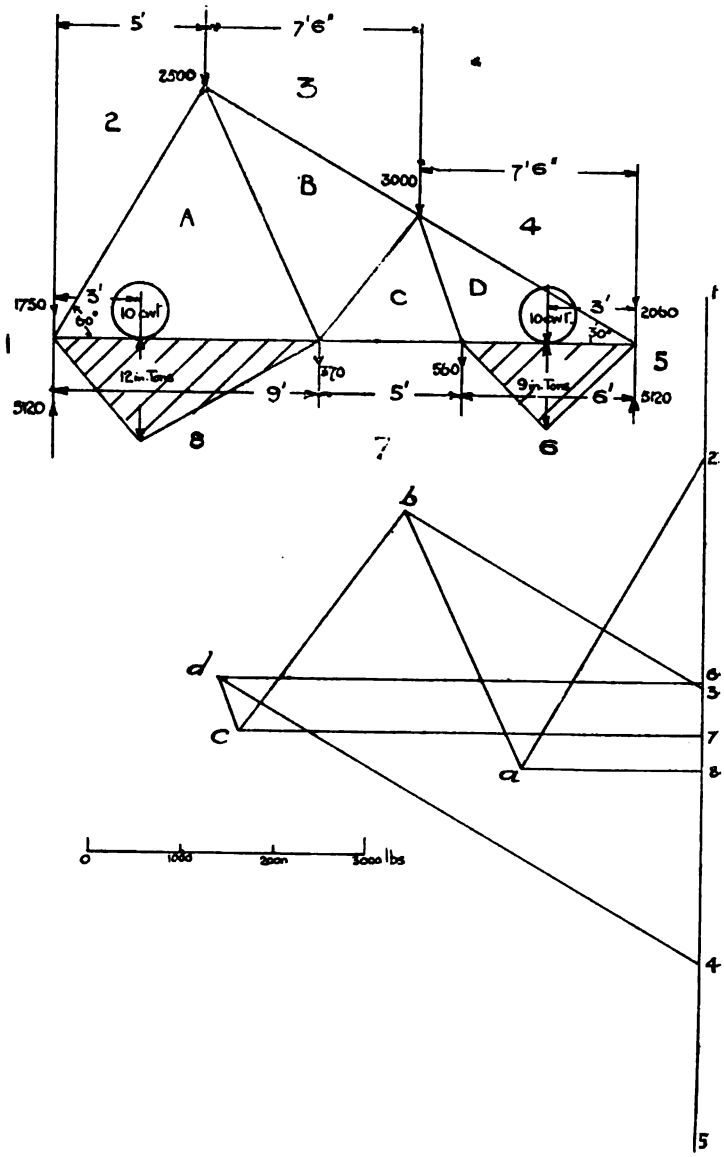

Fig. 137.—Saw-tooth Roof Truss with Local Bending.

Digitized by Google

1750 lb. The load on the bar D 6 has a B.M. diagram as shown, and contributes 560 lb. at each end. The two reactions at the ends of the truss are each equal to one-half the total load, *i.e.*, $\frac{1}{2}$ (8000 + 2240) = 5120 lb. By setting down the loads as shown on the figure, we can now draw the reciprocal diagram. On scaling off from this diagram, we see that the forces in the bars A 8 and B 3 are 1950 lb. and 5250 lb. respectively.

NOTE.—We have assumed in this working that the tie is in three separate portions pin-jointed at the nodes, although this will be probably untrue in actual practice.

To obtain the stresses in the bars, we see from the tables, using our previous notation, that

$$I = 2 \times 3{\cdot}20 = 6{\cdot}40\,; \quad A = 2 \times 2{\cdot}752 = 5{\cdot}50\,; \quad d_c = 1{\cdot}20,\ d_t = 2{\cdot}30$$

$$\therefore\ Z_T = \frac{6{\cdot}40}{1{\cdot}2} = 5{\cdot}38$$

$$Z_C = \frac{6{\cdot}46}{2{\cdot}3} = 2{\cdot}81$$

$$\therefore \text{ Taking bar A 8, maximum tensile stress} = \frac{P}{A} + \frac{M}{Z_T}$$

$$= \frac{1950}{5{\cdot}50 \times 2240} + \frac{12}{5{\cdot}38} = 2{\cdot}4 \text{ tons per sq. in.}$$

$$\text{Maximum compressive stress} = \frac{M}{Z_c} - \frac{P}{A}$$

$$= \frac{12}{2{\cdot}81} - \frac{1950}{5{\cdot}50 \times 2240} = 4{\cdot}05 \text{ tons per sq. in.}$$

Taking bar D 6,

$$\text{Maximum tensile stress} = \frac{5250}{5{\cdot}50 \times 2240} + \frac{9}{5{\cdot}38} = 2{\cdot}09 \text{ tons per sq. ft.}$$

$$\text{Max. compressive stress} = \frac{9}{2{\cdot}81} - \frac{5250}{5{\cdot}50 \times 2240} = 2{\cdot}78 \text{ tons per sq. in.}$$

Roof Truss with Knee Bracing.—In order to give to roof trusses further rigidity against wind pressure, 'knee bracing,' consisting of bars F, 10; X, 10, Fig. 138, are often provided. The columns supporting the roof may be considered as pin-jointed at A and B, and in order to get the maximum stresses in the truss we will assume that the support of the column at A is such that it can resist no horizontal force. We then find, as in previous cases, the resultant wind load W_1 on the rafter, and then find the wind load W_2 at the side. Producing these to meet, and finding their resultant, we produce this resultant to meet R_A in y. Then, on joining B to y, we get the direction of R_B. We then get the reciprocal diagram (Fig. 138A) without much difficulty by starting at the left-

Digitized by Google

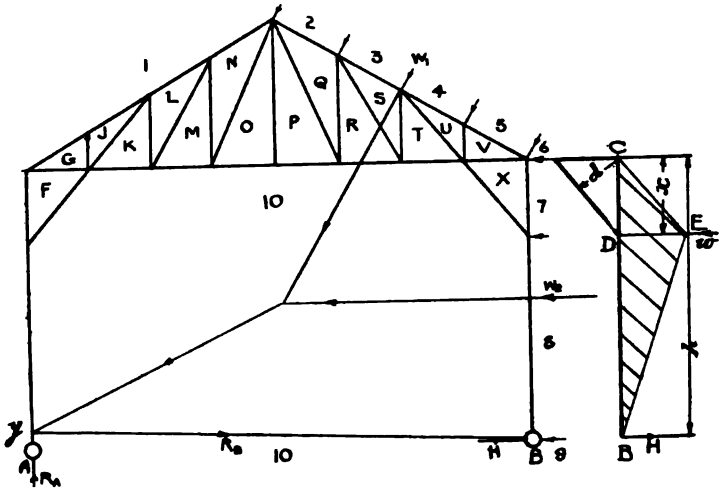

Fig. 138.—*Roof Truss with Knee-bracing.*

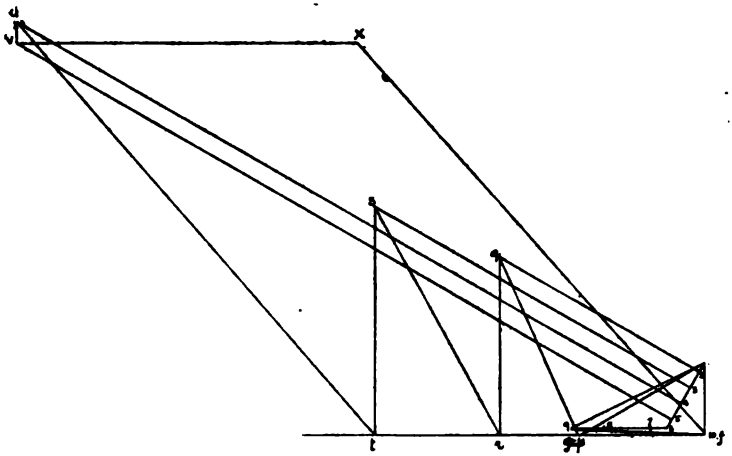

Fig. 138*a*.—*Stress Diagram for Roof Truss with Knee-bracing.*

Digitized by Google

hand side, there being no stress in F, 10. The stress in the knee brace, x, 10, is best calculated as follows, as it is not easy to obtain the point accurately from the diagram :—Adopting the method of sections (see below), if H is the resultant horizontal force at B, *i.e.*, H = horizontal component of R_B – force 8, 9, and w is the force 7, 8, then, taking moments round the point C,

$$\text{Stress in knee brace} \times d = H.h - w.x$$

$$\therefore \text{Stress in knee brace} = \frac{H.h - w.x}{d}$$

There will be a B.M. in the column, the maximum value being $H(h-x)$, and the diagram being as shown shaded. If the columns are securely fixed at the ends, the point B may be taken halfway up.

Some writers assume that each column bears one-half of the total horizontal force. If we made this assumption we should find the reactions accordingly, and then proceed as before. Although in practice the columns *may* usually thus share the horizontal force, it is not certain that they *will*, and on our assumption we get the maximum possible stresses.

THE METHOD OF MOMENTS OR SECTIONS.

This method is also known as Ritter's method, because Ritter extended the method and showed its application to several cases; he deals with it at length in his book on *Bridges and Roofs*. In some cases, such as parallel flange girders, it is just as quick as the reciprocal figure method, and in other cases it is very useful as a check on the stresses in some of the bars found by the latter method. Let A B C D (Fig. 139) represent one bay of a framed structure. Suppose we cut it by a line X X. Then since, if the actual bars were cut the whole structure would collapse, it follows that the forces in the bars A B, B D, D C must neutralise the forces acting on the structure to the right or left of the line X X; therefore, the moment of the forces in these bars about any point whatever must be equal to the moment about that point of all the external forces to the right or left of X X. Thus, by taking moments about one of the points where two bars meet, we see, since the moment of a

Digitized by Google

force about a point in its line of action is zero, that the moment of the force in the remaining bar about such point is equal to the moment of the external forces about that point. If, therefore, we

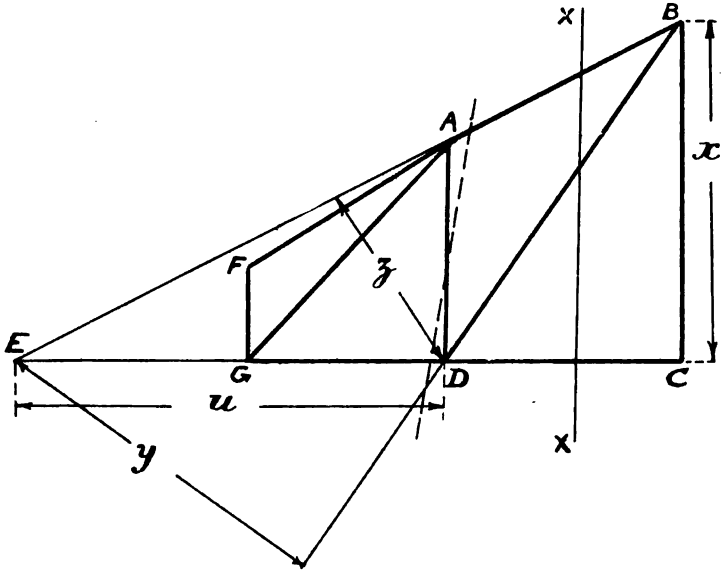

Fig. 139.—*The Method of Moments.*

require the force in A B, take moments about the point D, then moment of force in A B about D

$= f_{AB} \times z$ = moment of external forces about D

= bending moment at D

$= M_D$

Similarly, to get force in C D take moments about B, then

$f_{DC} \times x = M_B$

Again, to get force in B D take moments about E, where B A and C D, produced, meet, then

$f_{BD} \times y$ = moment of external forces to left or right of XX about E

In this last case we cannot say the B.M. at E, because that would include the moment about E of the forces between E and XX.

Digitized by Google

As a simple example, take the roof truss shown in Fig. 140. In this method it is simpler in many cases to letter the nodes than to adopt Bow's notation.

Take first the bar A B. If this were cut through, the structure would collapse and the bar A J would turn about the point J relatively to the remainder of the truss.

∴ Force in A B × distance from J = moment of forces to right of bar A B about point J;

$$i.e., f_{AB} \times 5 = R_A \times 13{\cdot}33 = 3 \times 13{\cdot}33$$

$$\therefore f_{AB} = \frac{3 \times 13{\cdot}33}{5} = 8{\cdot}0 \text{ tons}$$

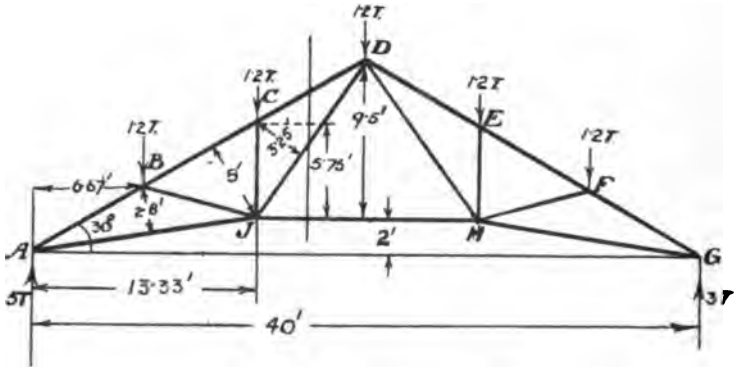

Fig. 140.—*Example on Method of Moments.*

It is clear that if A B is cut through it tends to shut up, so that A B is a strut.

Next take the bar A J. If it were cut through, the structure would collapse, the bar A B turning about the J.

∴ Force in A J × distance from B = moment of forces to right about B;

$$i.e., f_{AJ} \times 2{\cdot}8 = 3 \times 6{\cdot}67$$

$$\therefore f_{AJ} = \frac{3 \times 6{\cdot}67}{2{\cdot}8} = 7{\cdot}1 \text{ tons}$$

A J will clearly open out if cut through, and is therefore a tie.

Consider next the bar J H. If cut through, the whole structure collapses about the point D. Therefore, reasoning as before,

Digitized by Google

$$f_{JH} \times 9{\cdot}5 = 3 \times 20 - 1{\cdot}2 \times 13{\cdot}33 - 1{\cdot}2 \times 6{\cdot}67 = 36$$

$$\therefore f_{JH} = \frac{36}{9{\cdot}5} = 3{\cdot}68 \text{ tons.}$$

Consider, finally, the bar J D. Then considering a section such as X X as in the general case, the moment about any point of the forces in the three bars cut must be equal to the moment of external forces about the same point. Take moments about C; then

$$f_{JD} \times 3{\cdot}25 + f_{JH} \times 5{\cdot}75 = 3 \times 13{\cdot}33 - 1{\cdot}2 \times 6{\cdot}67$$

$$f_{JD} \times 3{\cdot}25 + 3{\cdot}68 \times 5{\cdot}75 = 32$$

$$f_{JD} = \frac{10{\cdot}84}{3{\cdot}25} = 3{\cdot}33 \text{ tons.}$$

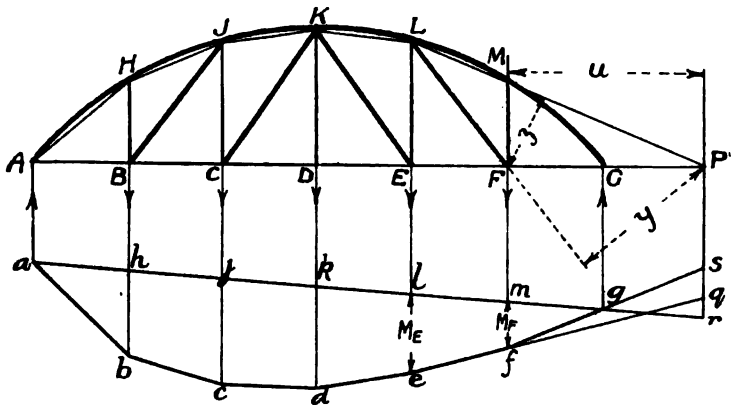

Fig. 141.—*Method of Moments using B.M. Diagram.*

Vertical Members in Method of Sections.—If it is required to find the stress in a vertical member of a framed structure by means of the method of sections, we have only to imagine it slightly inclined. If, for example, the stress in A D, Fig. 139, is required, imagine it slightly inclined, then two of the bars D G and B A meet in E.

$\therefore f_{AD} \times u$ = moment about E of forces to right or left of given section.

Method of Sections applied to Graphical Construction.—Let A K G, Fig. 141, be a truss or other framed structure loaded in any manner and let the B.M. diagram, drawn

Digitized by Google

with a polar distance p, for the given loading treated as loads on a simple beam be $a\ b\ c\ d\ e\ f\ g$. Then, as previously explained, considering one bay,

$$f_{LM} = \frac{M_F}{z} = \frac{p \times m f}{z}$$

$$f_{EF} = \frac{M_E}{x} = \frac{p \times l e}{x}$$

$$f_{LF} = \frac{\text{moment of forces to left of E about P}}{y}$$

$$= \frac{p \times q r}{y}$$

Where q and r are points on vertical through P, where $l\ m$ and $e\ f$ produced cut it. This follows from the reasoning for the link and vector polygon construction given on p. 61.

Similarly—

$$f_{MF} = \frac{\text{moment of forces to left of F about P}}{u}$$

$$= \frac{p \times s r}{u}$$

Where s is point where $f\ g$ produced cuts vertical through P.

Girders with Parallel Flanges. — The method of sections is particularly simple in the case of girders with parallel flanges, because the depth in each case is constant.

Let Fig. 142 represent a Linville truss loaded in any way.

Then stress in C D $= f_{CD} = \frac{M_D}{d}$; stress in P O $= f_{PO} = \frac{M_C}{d}$

Therefore to some scale the B.M. diagram gives the stresses direct, or by drawing the B.M. diagram with a polar distance equal to the depth d, the B.M. diagram will gives the stresses to the load scale.

When we come to obtain the stresses in the verticals and diagonals, we cannot take moments before because the top and bottom flanges do not meet at finite distances.

Consider any diagonal, say O C; since P O and C D are horizontal, the forces in them cannot have any effect on the vertical force acting on the bay. Therefore, vertical component of force in O C = resultant vertical force over bay = what we have previously called the *shearing force* on the bay. We thus see that

Digitized by Google

we obtain the stresses in the diagonals by resolving the shearing force in the direction of the diagonal, *i.e.*, drawing *c d* parallel to O C we get the forces in O C. Similarly, the force in any vertical is equal to the shearing force at the given point, *i.e.*, force in C P = *c e*.

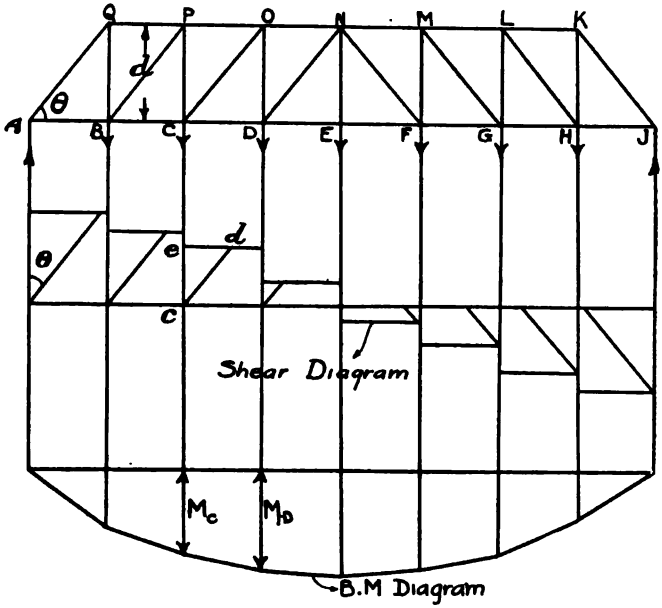

Fig. 142.—*Method of Moments for Parallel Girder.*

Girder with Parallel Flanges — Trigonometrical Solution.—In the above case, if all the diagonals are of the same angle the stresses can be very simply calculated as follows:

Take first the stresses in flanges.

$$f_{AB} = \frac{R_A \cdot AB}{d} = R_A \cot \theta$$

$$f_{QP} = \frac{R_A \cdot AB}{d} = R_A \cot \theta$$

$$f_{BC} = \frac{R_A \cdot AC - W_1 \cdot BC}{d} = (2R_A - W_1) \cot \theta = f_{PO}$$

$$f_{CD} = \frac{R_A \cdot AD - W_1 \cdot ED - W_2 \cdot CD}{d} = (3R_A - 2W_1 - W_2) \cot \theta = f_{DN}$$

and so on.

Digitized by Google

If we take the nth bay from end A, the diagonals remaining in the same direction,

Stress in lower flange

$$= [n\,R_A - (n-1)\,W_1 - (n-2)\,W_2 \ldots - W_{n-1}] \cot\theta$$

Stress in upper flange $= [(n-1)\,R_A - (n-2)\,W_1 \ldots . W_{n-2}] \cot\theta$

Now take the diagonals.

$$f_{AQ} = R_A \operatorname{cosec}\theta$$

$$f_{BP} = R_A \operatorname{cosec}\theta - W_1 \operatorname{cosec}\theta = (R_A - W_1) \operatorname{cosec}\theta$$

and so on.

Stress in n^{th} bay, the diagonals remaining in constant direction,

$$f_{n^{th}\text{ diagonal}} = (R_A - W_1 \ldots . - W_{n-1}) \operatorname{cosec}\theta.$$

Finally take the verticals,

$$f_{QB} = R_A - W_1$$

$$f_{PC} = R_A - W_1 - W_2$$

and so on.

$$f_{n^{th}\text{ vertical}} = R_A - W_1 \ldots . - W_n)$$

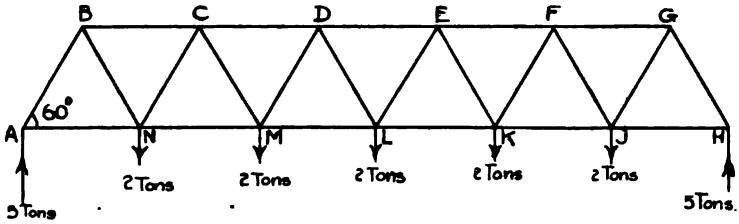

Fig. 143.

EXAMPLE.—Take the Warren girder shown in Fig. 143. For $\theta = 60°$, $\cot\theta = \cdot577$. $\operatorname{cosec}\theta = 1\cdot155$.

$\therefore f_{AN} = 5 \cot 60° = 5 \times \cdot577 = 2\cdot885$ tons $= f_{HJ}$

$f_{NM} = (5 \times 3 - 2) \cot 60° = 13 \times \cdot577 = 7\cdot501$ tons $= f_{JK}$

$f_{ML} = (5 \times 5 - 2 \times 3 - 2) \cot 60° = 17 \times \cdot577 = 9\cdot909$ tons $= f_{KL}$

$f_{BC} = (5 \times 2) \cot 60° = 5\cdot770$ tons $= f_{GF}$

$f_{CD} = (5 \times 4 - 2 \times 2) \cot 60° = 16 \times \cdot577 = 9\cdot232$ tons $= f_{FE}$

$f_{DE} = (5 \times 6 - 2 \times 4 - 2 \times 2) \cot 60° = 18 \times \cdot577 = 10\cdot386$ tons $= f_{ED}$

$f_{AB} = f_{BN} = 5 \operatorname{cosec} 60° = 5 \times 1\cdot155 = 5\cdot775$ tons $= f_{HG} = f_{GJ}$

$f_{NC} = f_{CM} = (5 - 2) \operatorname{cosec} 60° = 3 \times 1\cdot155 = 3\cdot465$ tons $= f_{JF} = f_{FK}$

$f_{MD} = f_{DL} = (5 - 2 - 2) \operatorname{cosec} 60° = 1\cdot155 = 1\cdot155$ tons $= f_{KE} = f_{EL}$

Digitized by Google

Stresses in Framed Structures by Resolution.—This method consists in resolving the resultant force acting on any particular section in the three directions of the three bars cut by the section. It is particularly applicable to finding the stresses in verticals and diagonals of girders, with non-parallel flanges, subjected to travelling loads.

Let A B C D, Fig. 144, be one bay of a framed structure, and let F be the resultant force acting on it. The line X X cuts three bars A B, B D, D C, and the stresses in these bars must have a resultant equal and opposite to F.

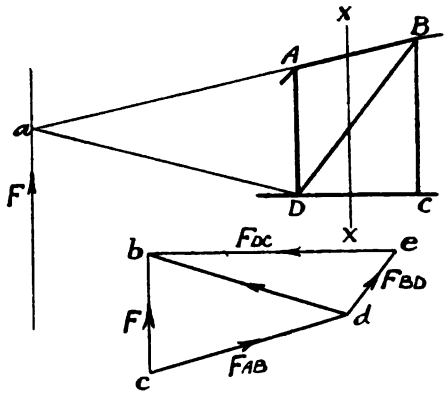

Fig. 144.—*Resolution Method.*

Produce one of the bars, say A B, to meet the line of action of F in *a*, and join *a* to D, the point of intersection of the other two.

Set down a line *b c* to represent F, and draw *b d* parallel to *a* D and *c d* parallel to A B; then draw *b e* parallel to D C and *d e* parallel to D B.

Then $cd = F_{AB}$; $be = F_{DC}$; $de = F_{BD}$.

Stresses in Framed Structures from Line of Pressure.—If we have any framed structure, and the line of pressure for the forces on it is known (see p. 139), we can readily determine the stresses by the method of moments. In arches and other similar structures the whole real difficulty lies in finding the line of pressure, because the reactions have to be determined

Digitized by Google

before such line can be drawn. We will deal later with this in Chapter XIII.

Let A B E C D, Fig. 145, be a portion of a framed structure, and let *a b c d* be the line of pressure, the resultant forces for the separate portions being F, F_1, F_2.

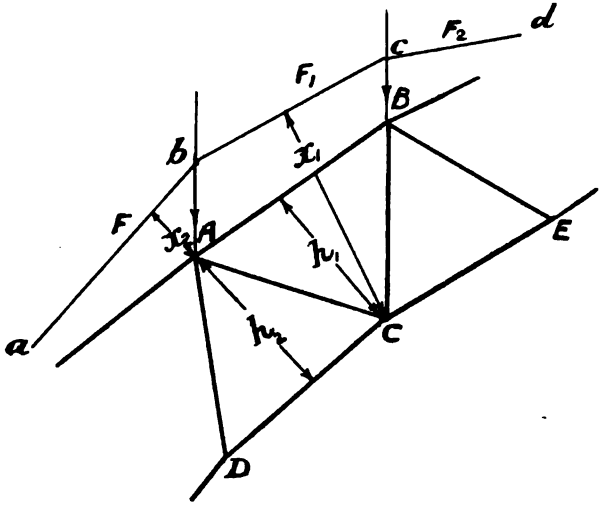

Fig. 145.—*Stresses from Line of Pressure.*

Then to get f_{AB} take moments about C.

$$\text{Then } f_{AB} \times h_1 = F_1 \times x_1$$

$$f_{AB} = \frac{F_1 \times x_1}{h_1}$$

To get stress in D C take moments round A.

$$\text{Then } f_{DC} \times h_2 = F \times x_2$$

$$f_{DC} = \frac{F \times x_2}{h_2}$$

To get f_C produce A B and D C to meet, and let perpendicular distances from this point to A C and *b c* be respectively *k* and *y*.

$$\text{Then } f_{AC} = \frac{F_1 \times y}{k}$$

Digitized by Google

***Stresses in Parallel Flange-framed Girders with Uniform Rolling Loads.**—In finding the stresses in a parallel-flange framed girder with a uniform rolling load of length not less than the span, the maximum stresses in the flanges are obtained by the method of moments or reciprocal figures by considering the span fully covered. To get the position of the load to

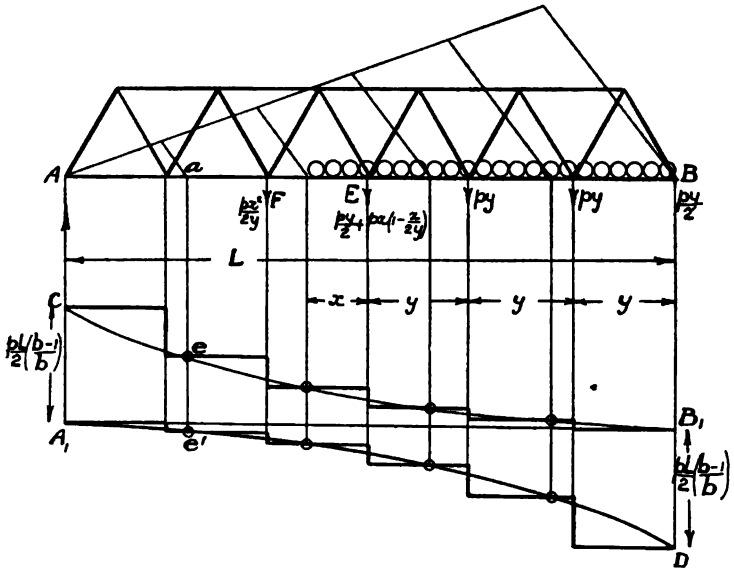

Fig. 146.—*Maximum Stresses in Diagonals for Rolling Loads.*

give the maximum stresses in the diagonals we proceed as follows:

Divide the span into a number of equal parts, one less than the number of bays, obtaining points such as *a*, Fig. 146. On a horizontal base line A_1 B_1 set up and down lengths A_1 C, B_1 D, each equal to $\frac{p\,L}{2}\left(\frac{b}{b}-\frac{1}{b}\right)$ where p is the intensity of the load, L the span, and b the number of bays. Through C and D draw parabolas with vertices at B_1 and A_1 and project points such as *a* down to meet these parabolas in points such as *e*, *e'*, and project

Digitized by Google

horizontally across the bays as shown. Then the maximum stresses in the diagonals are obtained from this stepped curve, as explained on p. 321.

The proof of this construction is as follows: Let each bay be of length y, and let the load have gone a distance x beyond the end E of the nth bay.

Then shear at E $= S_E = R_A - \frac{p x^2}{2y}$, since the portion $p x$ of the load is distributed as $\frac{p}{2}\frac{x^2}{y}$ at F and $p x \left(1 - \frac{x}{2y}\right)$ at E.

$$\text{Now } R_A \times L = p y^2 + 2 p y^2 + \ldots . (n-1) p y^2 + n y \left\{\frac{p y}{2} + p x \left(1 - \frac{x}{2y}\right)\right\} + \frac{p x^2}{2y}(n+1) y \ldots\ldots (1)$$

$$= p y^2 \left\{\frac{n(n-1)}{2}\right\} + \frac{n p y^2}{2} + n p x y - \frac{n p x^2}{2} + \frac{n p x^2}{2} + \frac{p x^2}{2} \ldots (2)$$

$$= \frac{p}{2}\left\{y^2 (n^2 - n + n) + 2 n x y + x^2\right\}$$

$$= \frac{p}{2}\left\{x + n y\right\}^2 \ldots\ldots (3)$$

$$\therefore R_A = \frac{p}{2L}\left\{x + n y\right\}^2$$

$$\therefore S_E = \frac{p}{2}\left\{\frac{(x + n y)^2}{L} - \frac{x^2}{y}\right\} \ldots\ldots (4)$$

This is maximum when $\frac{d S_E}{d x} = 0$

i.e., when $\frac{2 (x + n y)}{L} - \frac{2 x}{y} = 0$

i.e., $(x + n y) y = x L$

$$x (L - y) = n y^2$$

$$x = \frac{n y^2}{(L - y)} = \frac{n \cdot y^2}{(b y - y)} = \frac{n \cdot y}{(b - 1)}$$

i.e., $x = n \times$ the length of one bay $\div$ one less than the number of bays.

Digitized by Google

Putting this value in equation (4) we get—

$$S_E = \frac{p}{2}\left\{\frac{\left[\frac{n\,y}{(b-1)} + n\,y\right]^2}{L} - \frac{n^2 y^2}{\frac{(b-1)^2}{y}}\right\}$$

$$= \frac{p}{2}\left\{\frac{b^2\,(n\,y)^2}{L\,(b-1)^2} - \frac{n^2 y^2}{y\,(b-1)^2}\right\}$$

$$= \frac{p\,n^2 y^2}{2\,(b-1)^2}\left\{\frac{b^2}{L} - \frac{1}{y}\right\} = \frac{p\,n^2 y^2}{2\,(b-1)^2} \cdot \left\{\frac{b^2}{L} - \frac{b}{L}\right\}$$

$$= \frac{p\,.\,n^2 y^2\,b}{2\,L\,(b-1)} = \frac{p\,n^2 L^2\,.\,b}{2\,.\,L\,.\,b^2\,(b-1)}$$

$$= \frac{p\,.\,n^2\,L}{2\,b\,(b-1)}$$

This is obviously a parabola.

At end $n = (b-1)$

$$\therefore\ S_A = \frac{p\,.\,(b-1)\,.\,L}{2\,b} = \frac{p\,L}{2}\left(\frac{b-1}{b}\right)$$

SUPERPOSED FRAMED STRUCTURES.

Many framed structures, which are in reality redundant frames, are often treated for the purpose of finding the stresses in them as being composed of a number of superposed firm frames, the load being equally divided between them, and the stresses in bars common to the frames being added together.

The following trusses show typical cases of this kind :

Lattice Girder (Fig. 147).—This can be broken up into two **N** or Linville girders as shown in the figure at (2) and (3), the reciprocal figures for which are obtained quite simply and are shown in the figure at (4) and (5). The stresses in the bars common to (2) and (3) are added together to get the stresses in the actual truss (1).

Whipple-Murphy Truss.—This form of truss is shown in Fig. 148, which shows the manner in which it can be broken up, (4) being the reciprocal figure for the portion (2) and (5) that for the portion (3). If the loading is not equal, the diagrams are drawn in a similar manner, and do not present any difficulty.

Digitized by Google

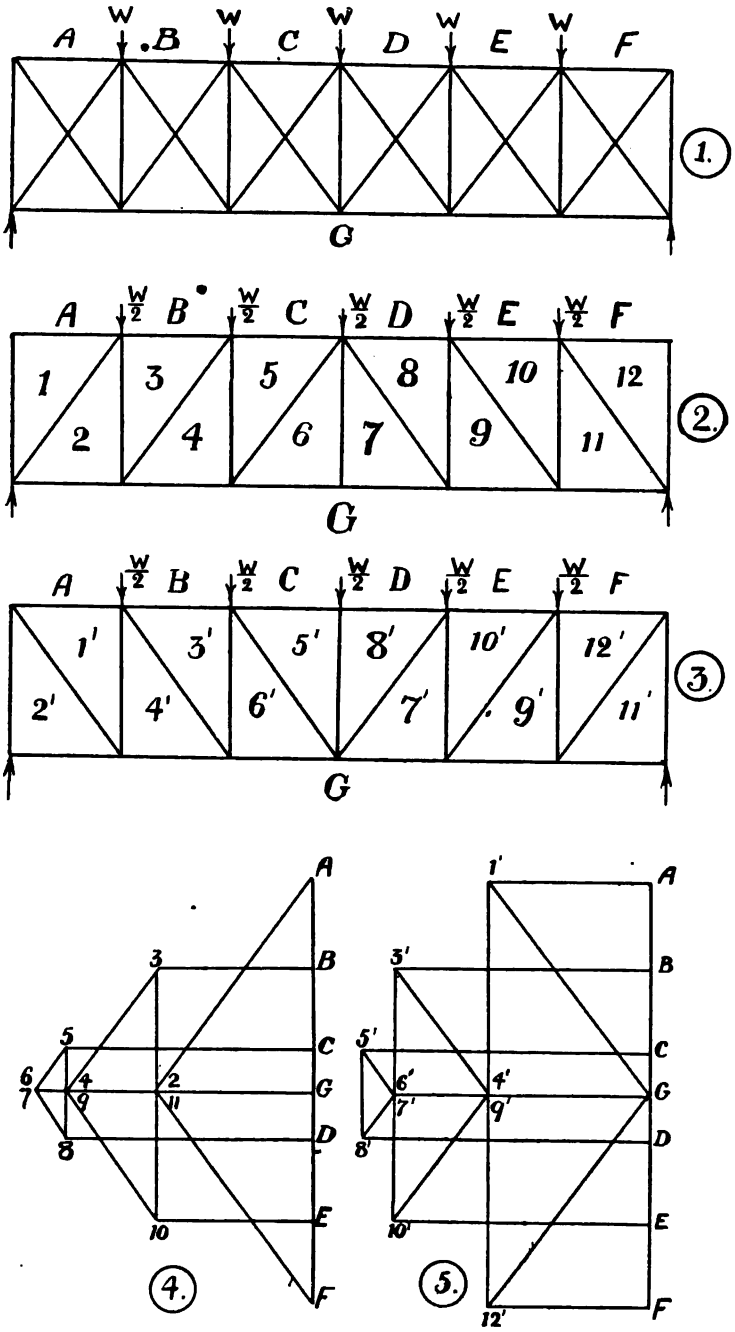

Fig. 147.—Lattice Girder.

Digitized by Google

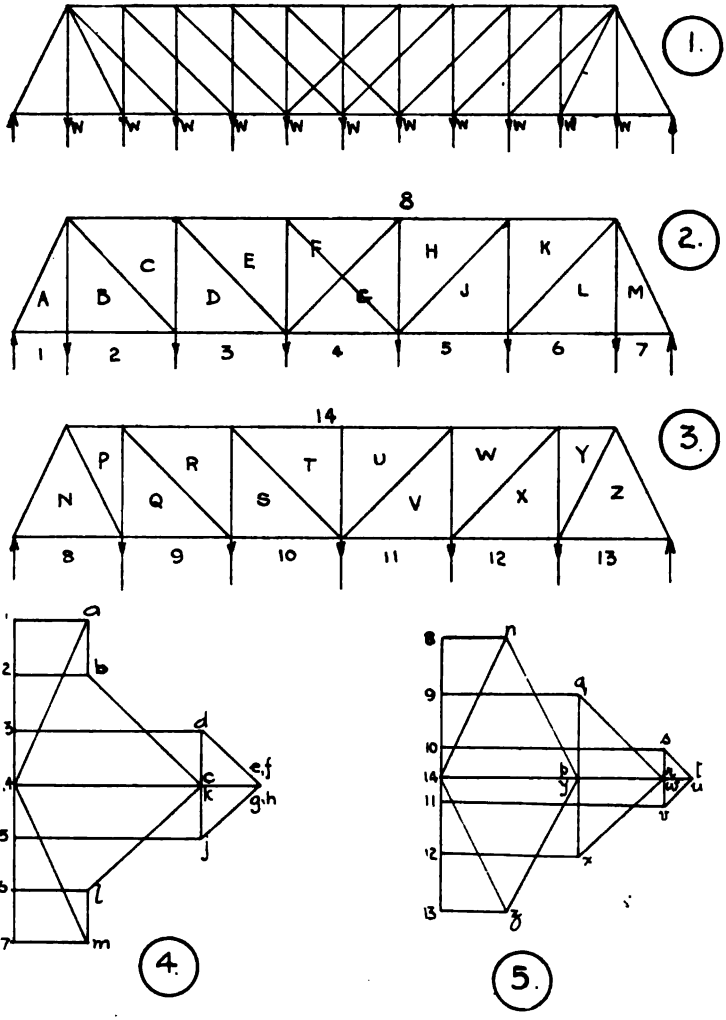

Fig. 148.—*Whipple-Murphy Truss.*

Digitized by Google

Bollman and Fink Trusses are of the form shown in Fig. 149, these trusses being used largely in America and on the Continent for timber bridges. We can obtain the stresses in one diagram for these trusses, the same method being also applicable to the Lattice and Whipple-Murphy trusses. It is based on the fact that where a vertical member is connected to the horizontal member without inclined members, *e.g.*, bars B C and F G in the Fink truss, the load in such verticals must be the load at the given node. Take the Fink truss, which is loaded unevenly, and letter every space, then B C and A K are the same bar, and so on. Set down the loads 1, 2; 2, 3; 3, 4; 4, 5; 5, 1. Through 5 draw parallels to 5 A, 5 K, then since the stress in A K is equal to the load 1, 2 the line 5 *a*, 5 *k* are produced until the vertical intercept is equal to 1, 2; this determines the points *a*, *k*, the points *l*, *h* being similarly obtained. These points having been obtained the stress diagram can be drawn according to the ordinary rules and comes as shown.

Next take the Bollman truss shown in the figure. The stress diagram is in this case more troublesome, but can be obtained as follows. (The figure shows the diagram for half the figure, the loading being uniform). From 7 draw 7 *e*, 7 *k* parallel to 7 E, 7 K, and produce them until the vertical intercept *e k* is equal to the load 1, 2, thus obtaining the points *e* and *k*. In similar manner obtain the points *l*, *r*, *s*, *s'*. From *l* and *k* the point *j* is obtained by drawing parallels to K J, L J; and *d*, *u* are then found by making *j d* = force 1, 2, *j u* = force 2, 3; *q* being found in similar manner. *q'* is next obtained; either by finding *r'*, or in our case with uniform loading by placing *q'* the same distance below the horizontal through 7 as *q* is above. *q t*, *q' t'* are then drawn parallel to Q T, Q' T' until *t t'* = load 3, 4. Then in similar manner the points *p*, *h*, *c* and then *n*, *g*, *b* are obtained; *a*, *f*, *m* then being easily found.

Further Worked Examples on Framed Structures.—The following additional worked examples should be of value in clearing up some points of difficulty which often arise:—

(1) *Find the stresses in the roof truss shown in Fig.* 150, *taking suitable loading. Is the curved* T *bar strong enough?*

Taking the load, including the wind pressure, as 40 lb. per

Digitized by Google

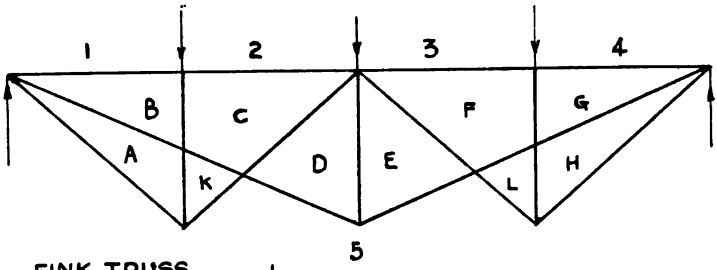

FINK TRUSS.

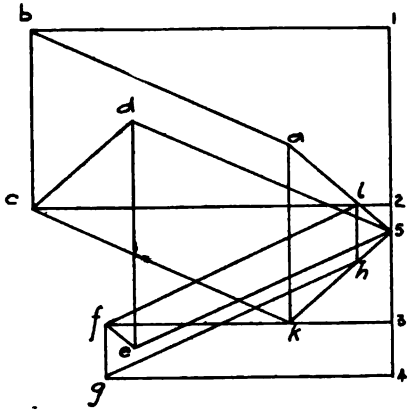

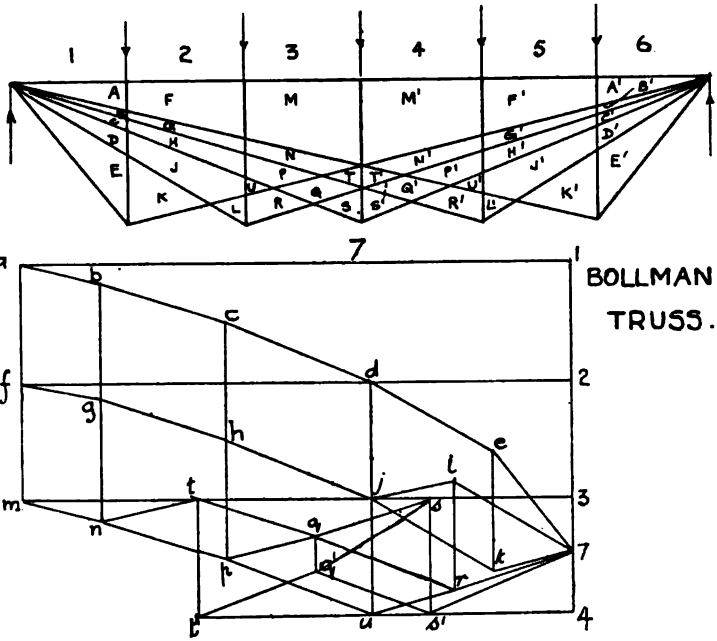

BOLLMAN TRUSS.

Fig. 149.

Digitized by Google

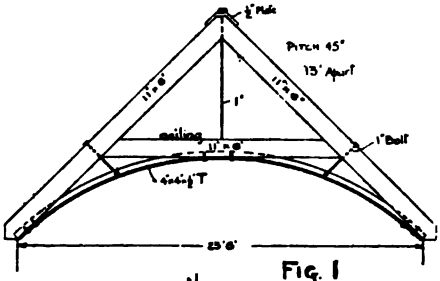

Fig. 1

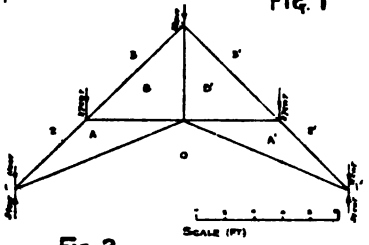

Fig. 2

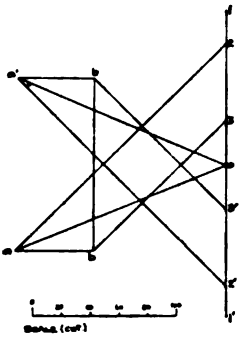

Fig. 3

(Builders' Journal.)

Fig. 150.—*Curved Tie Roof Truss.*

sq. ft. of ground plan, we get the load carried by the truss equal to $\frac{23'5 \times 13 \times 40}{112} = 108$ cwt., about. Dividing this load up in proportion to the length of the different portions of the rafters, we get the loads on the various nodes as shown in the frame diagram, Fig. 2, in which the curved tie is replaced by two straight ties, A O, A′ O. From

Digitized by Google

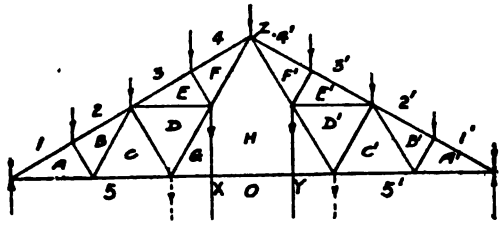

Fig. 1.

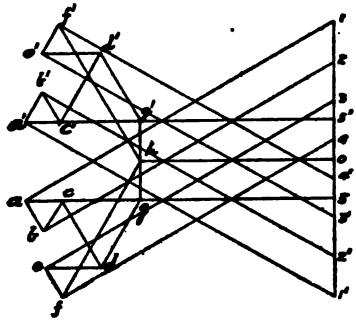

Fig. 2.

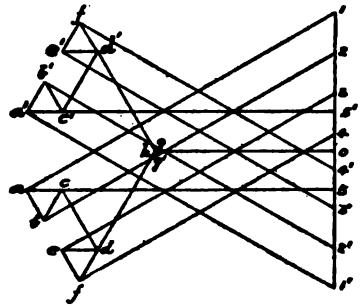

Fig. 3.

(Builders' Journal.)

Fig. 151.—*French Truss with unusual Loading.*

this frame diagram the reciprocal diagram shown in Fig. 3 is obtained according to the ordinary rules. Scaling off from this figure, we get the force P in the tie bar A O equal to 120 cwt., or 6 tons. The maximum distance x between the straight tie and the curved tie is 1·3 ft.,

Digitized by Google

or 1·3 × 12 ins., so that the bending moment due to this is equal to P x. The combined stress in the T bar is equal to $-\frac{P}{A}\left(1+\frac{xd}{k^2}\right)$ where A is the area of cross section of the bar, k the radius of gyration, and d the distance from the centroid of the section to the edge. From the tables we see that for a 4 by 4 by ½ T, A = 3·75 sq. in.; k^2 = 1·44 in. units; d = 1·16 ins. Therefore in our case maximum tensile stress $= \frac{6}{3\cdot75}\left(1+\frac{13\times12\times1\cdot16}{1\cdot44}\right) = \frac{6\times13\cdot5}{3\cdot75} = 21\cdot6$ tons per sq. in. This is too much. For two $5\times3\frac{1}{2}\times\frac{1}{2}$, placed with long legs vertical, the maximum stress would come about 9·5 tons per sq. in. This is also high, but the 1 in. bolts have a strengthening effect, and the timbers are heavier than necessary to carry their stresses, so that this would probably be safe.

(2) *Explain how to draw the reciprocal figure and so obtain the stresses for the roof truss loaded as shown in full lines in Fig.* 151. *Is it correct to draw the diagram by assuming that the loads X and Y are transferred to the positions shown dotted?*

To obtain the stress diagram for this case we must first calculate the stress in the bar O H, by the method of moments. This is obtained by taking the moments about the node Z of all the forces to one side of it, and dividing by the vertical distance from Z of the bar O H. Taking the loads X, Y, as equal to the loads 1, 2, &c., and equal to W, this gives the force in O H equal to 4·88 W. If the loads have not this value, their actual value must be used in calculating the moment about the point Z. The points 1, 2, 3, 4, &c., are then placed on a vertical line, as shown in Fig. 2 to represent the loads, and $o_1 h$ is drawn horizontal, equal to the value calculated for the stress in O H (4·88 W in this case). Having obtained the point h, the reciprocal figure is then drawn by the ordinary rules, and comes as shown in Fig. 2. This diagram would not be the same as if the loads were in the position shown dotted in Fig. 1. This will be seen by considering Fig. 3, which shows the reciprocal figure drawn for the loads X, Y, in the dotted position. The force in O H in this case comes 4·59 tons by the method of moments, but this need not have been calculated in this case, as the diagram could have been obtained by Barr's method of replacing the bar D E, E F, by a single bar. A comparison of Figs. 2 and 3 will show the difference in the stresses for the two methods of loading.

Stresses in Tripods and Shear Legs.—Although the treatment of space frames is beyond our present scope, we will deal with the stresses in shear legs or tripods.

Digitized by Google

Draw the structure in plan and elevation, and let W be the load at A, A B being the back leg and A D, A E the fore legs. Resolve W down A B and *down the plane* of the other two legs, *i.e.*, set out *a b* equal to W and draw *b c* parallel to A B, and *a c* parallel to A C, then *b c* is the force in B C. Now swing the shear legs down horizontally in order to get A_2 D E, the true shape of the triangle A D E, then setting out *a c* horizontally and drawing *a d* and *c d* parallel to E A_2, D A_2 respectively, we get the stresses in the fore legs.

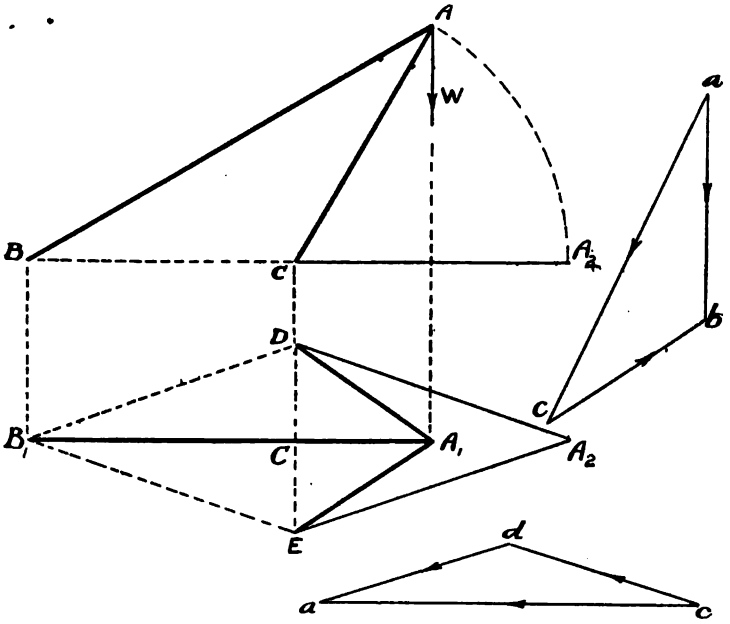

Fig. 152.—*Stresses in Shear Legs.*

Digitized by Google

CHAPTER XII.

COLUMNS, STANCHIONS, AND STRUTS.

THE question or strength of columns or compression members is of very great importance, and has formed a field of discussion and investigation for many years. Interest in the subject has recently been aroused by the regrettable failure of the Quebec Bridge, and within the next few years many investigators will probably direct their energy towards giving us further information in this direction. Although the subject certainly presents difficulties, much of the confusion which is in the minds of many draughtsmen and designers is undoubtedly due to insufficient grasp of the meaning of the various formulæ in use. We will endeavour to make this subject quite clear by approaching it in the following manner, which the author believes to be new.

In the design of a tie bar we use a constant working stress, that is to say, the stress does not depend on the shape or the length of the tie; but in struts or compression members the working stress depends on the shape and the length and the manner in which the ends are fixed. The quantity which determines the working stress, and thus the strength of a pin jointed strut, column, or stanchion is equal to

$$\frac{\text{Length of column}}{\textit{Least} \text{ radius of gyration about centroid}} = c$$

This quantity we will call the **Buckling Factor** of the strut.

For struts with ends fixed in other ways the buckling factor is obtained by dividing the *equivalent* length of the strut by the least radius of gyration. We will show later how the equivalent length is obtained.

The reason why a variable working stress has to be used is that struts fail by buckling and not by crushing, unless their length is extremely small. If for some reason the centre line of a strut is not quite straight or the load comes out of centre, there are bending stresses caused in the material, and the distortion due to

Digitized by Google

these bending stresses tends to increase the eccentricity, and failure may ultimately occur due to this reason.

Strut Formulæ.—A large number of formulæ, some theoretical and some empirical, have been proposed for obtaining the working stress in compression in terms of the buckling factor of the strut and of the crushing strength of the material. Before these formulæ can logically be compared we must be careful to see that they are for the same crushing strength, and for the same manner of fixing the ends of the strut. We will consider the following :—

(*a*) **Euler's Formula.**—This formula is intended for long struts in which the direct stress is negligible compared with the buckling stress. It is usually given in the following form :—

$$P = \frac{\pi^2 E I}{L^2}$$

where P = the breaking load (not the working load)
E = Young's modulus
I = *least* moment of inertia
L = length of pin-jointed strut.

We will now put it into more convenient use for practice as follows :—

$$\therefore \frac{P}{A} = \text{breaking stress} = \frac{\pi^2 E A k^2}{A L^2}$$

$$= \frac{\pi^2 E}{\left(\frac{L}{k}\right)^2} = \frac{\pi^2 E}{c^2}$$

Adopting a factor of safety of 5, we get

$$\text{Working stress} = f_p = \frac{\text{breaking stress}}{5} = \frac{\pi^2 E}{5 c^2}$$

For mild steel, E = 13,000 tons per sq. in.

$$\therefore f_p = \frac{\pi^2 E}{5 c^2} = \frac{25{,}600}{c^2} \text{ tons per sq. in.}$$

For wrought iron E = 12,500

$$\therefore f_p = \frac{24{,}600}{c^2} \quad \text{,,} \quad \text{,,}$$

Similarly for cast iron $f_p = \frac{12{,}000}{c^2}$,, ,,

for timber $f_p = \frac{1{,}600}{c^2}$,, ,,

Digitized by Google

PROOF OF EULER'S FORMULA.—The proof of Euler's formula is found by many students to be somewhat difficult to follow, as it involves the solution of a differential equation. Suppose that a column in some way or other becomes deflected as shown in Fig. 153 (1). Then there are bending stresses induced in it, and the strut will exert a force P on the supports tending to straighten itself. Now, if the load on the strut is less than P, the strut will straighten, and so is safe; but if the load is greater than P, the strut will continue to deflect, and will ultimately break. When the load is equal to P, the strut is in unstable equilibrium, and so P is called the *critical, or buckling, or crippling load.*

Consider a point A on the strut.

The B.M. at A $= M_A = P x$.

Now, if R is the radius of curvature,

$$\frac{1}{R} = \frac{-d^2x}{dy^2} = \frac{M}{EI} = \frac{Px}{EI}$$

$$\therefore \frac{d^2x}{dy^2} = \frac{-P}{EI} \cdot x = -m^2 \cdot x \quad \ldots\ldots\ldots\ldots\ldots\ldots(1)$$

assuming that I is constant, or that the strut is of uniform section.

The general solution of this differential equation is

$$x = A \cos my + B \sin my \quad \ldots\ldots\ldots\ldots\ldots\ldots(2)$$

where A and B are constants, which are obtained as follows:—

When $y = \frac{-L}{2}$ and $\frac{+L}{2}$, $x = 0$

$$\therefore 0 = A \cos \frac{mL}{2} + B \sin \frac{mL}{2} \quad \ldots\ldots\ldots\ldots\ldots\ldots(3)$$

$$0 = A \cos \frac{-mL}{2} + B \sin \frac{-mL}{2} \quad \ldots\ldots\ldots\ldots\ldots\ldots(4)$$

$$= A \cos \frac{mL}{2} - B \sin \frac{mL}{2}$$

$\therefore$ B must $= 0$

$$\therefore x = A \cos my \quad \ldots\ldots\ldots\ldots\ldots\ldots(5)$$

When $y = 0$, x is finite, $\therefore$ A is not zero

$$\therefore \text{if } A \cos \frac{mL}{2} = 0$$

$$\cos \frac{mL}{2} \text{ must } = 0$$

Digitized by Google

The general solution for this condition is that

$$\frac{m\,L}{2} = \frac{n\,\pi}{2}$$

$$\therefore\ m^2 = \frac{n^2\,\pi^2}{L^2}$$

$$\therefore\ \frac{P}{E\,I} = \frac{n^2\,\pi^2}{L^2}$$

$$P = \frac{n^2\,\pi^2\,E\,I}{L^2} \qquad \text{.....(6)}$$

The lowest value of P is given by $n = 1$, and as this is the most important for us, we write the result as

$$P = \frac{\pi^2\,E\,I}{L^2} \qquad \text{.....(7)}$$

It should be noted that P is independent of the quantity x, so that the force necessary to keep the strut deflected at large radius of curvature is the same as that to keep it at a small radius, and so if the load is the least amount greater than P the strut will go on deflecting, and so break.

Use of Euler's Formula.—It must be remembered that in this formula we have not taken into account the direct compression stress on the strut. If the safe stress given by Euler's formula is greater than the safe compressive stress for very short lengths of the material, then obviously we should not use Euler's result. Thus, if Euler for mild steel gives f_p greater than 6 tons per sq. in. we should use 6 tons per sq. in.

Method of Fixing Ends—Equivalent Length of Strut.—In the above working we have considered the ends as pin-jointed. If the ends are fixed in any other way we must take as the length of the strut the length of the equivalent pin-jointed strut; this we will call the *equivalent length of the strut.*

Now consider the following methods of fixing the ends (see Fig. 153).

(1) Pin Joints at Each End.—This is the standard case.

(2) Both Ends Fixed in Position and Direction.—In this case the buckled form is as shown in the figure, and B C is the

Digitized by Google

equivalent length, *i.e.*, a pin-jointed strut of length B C is as strong as the fixed strut.

$$\therefore \text{ in this case equivalent length of strut } = \frac{L}{2}$$

$$\text{Buckling factor } = c = \frac{L}{2k}$$

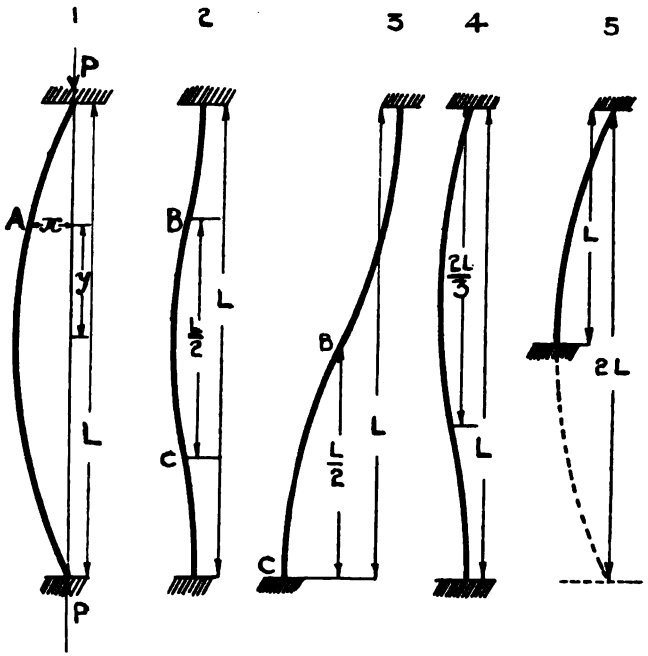

Fig. 153.—*Methods of Fixing Ends of Columns.*

(3) Both Ends Fixed in Direction only.—The buckled form in this case is as shown in the figure. On comparing with Case 1, it will be seen that the portion B C is equivalent to one-half the strut in Case 1, and so in this case, since B C $= \frac{L}{2}$

$$\text{equivalent length of strut } = L$$

$$\therefore \text{ Buckling factor } = c = \frac{L}{k}$$

Digitized by Google

(4) ONE END FIXED IN DIRECTION AND POSITION, OTHER END PIN-JOINTED.—It will be clear from the figure that in this case

$$\text{equivalent length of strut} = \frac{2L}{3}$$

$$\therefore \text{Buckling factor} = c = \frac{2L}{3k}$$

(5) ONE END FIXED IN DIRECTION AND POSITION, OTHER END FREE.—In this case

$$\text{equivalent length of strut} = 2L$$

$$\therefore \text{Buckling factor} = c = \frac{2L}{k}$$

SUMMARY OF VALUES OF BUCKLING FACTORS.

	Case 1.	Case 2.	Case 3.	Case 4.	Case 5.
Buckling factor $= c$	$\frac{L}{k}$	$\frac{L}{2k}$	$\frac{L}{k}$	$\frac{2L}{3k}$	$\frac{2L}{k}$

These values should be used in Euler's and the other formulæ involving the buckling factor.

(*b*) **Rankine's Formula.**—This formula is sometimes called the Gordon-Rankine formula, and is of the form

$$f_p = \frac{f_c}{1 + a\left(\frac{L}{k}\right)^2}$$

$$= \frac{f_c}{1 + a.c^2}$$

Where

f_c = safe compressive stress for very short lengths of the material

a = a constant depending on the material

c = buckling factor of the strut

f_p = working stress per sq. in. for the strut.

The following values of a may be taken according to different authorities.

Mild steel $a = \frac{1}{9000}$ to $\frac{1}{6000}$, $f_c = 6$ tons per sq. in.

Wrought iron $a = \frac{1}{9000}$ to $\frac{1}{8000}$, $f_c = 4$ „ „ „

Cast iron $a = \frac{1}{2500}$ to $\frac{1}{1800}$, $f_c = 7$ „ „ „

Timber $a = \frac{1}{2000}$, $f_c = 5$ „ „ „

In each case we prefer to use the lower value of the constant a.

Digitized by Google

There is a very large amount of variation in the values of the constants as given by various authorities, and in comparing the above with those given by others, the reader should be careful to compare the *safe stresses* given with the above figures with the safe stresses given by others, because the value of f_c also varies in the various forms of the formula and thus, although the constants may be different, the resulting safe stress may be nearly the same. Care must also be taken to see whether pin-jointed or fixed ends are taken as the standard case.

CONSTRUCTION OF RANKINE'S FORMULA.—Rankine's formula may be looked upon as a corrected form of Euler's.

If c is very small, *i.e.*, if the strut is very short, the term $a\,c^2$ is negligible, and so we get $f_p = f_c$

This is, of course, the result which we ought to obtain.

If c is great, *i.e.*, if the strut is very long, the term $a\,c^2$ will be so great that 1 may be neglected in comparison with it, and so we get

$$f_p = \frac{f_c}{a\,c^2}$$

This will give the same result as Euler if $\frac{f_c}{a} = \frac{\pi^2 E}{5}$

$$i.e., \text{ if } a = \frac{\pi^2 E}{5 f_c} = \frac{25{,}600}{6} = 4267$$

Although some writers state that constants obtained in this manner agree with experimental results, the constants are not usually calculated theoretically in this way, but are obtained from experiments.

It is believed that the figures recommended above will agree well with the best practice.

It is interesting to note that in one form of Rankine's formula, giving the breaking or crippling stress, viz.

$$\frac{P}{A} = \frac{f}{1 + a\left(\frac{l}{k}\right)^2}$$

f is the stress at the elastic limit.

In an earlier chapter we pointed out the desirability of obtaining the working stresses from elastic limit, *i.e.*, basing the factor of safety on the elastic limit.

An interesting and important recent paper by Mr. C. P. Buchanan, in *Engineering News*, Dec. 26th, 1907 — published

Digitized by Google

after the Quebec Bridge disaster—gives the results of tests on full-size built-up columns such as are actually used in bridge practice. The tests extend over a period of fourteen years, and show that even for the short columns the buckling or crippling stress is not more than 90 per cent. of the tensile yield point (see p. 4).

We thus see that in columns as actually used in practice, the buckling stress is certainly not more than the elastic limit stress, and so the only reasonable factor of safety is that based on the elastic limit.

(*c*) **Straight Line Formula.**—These empirical formulæ are used principally in America, and give very good approximations for rough working. They are of the form

$$f_p = f_c\left(1 - e \cdot \frac{L}{k}\right)$$
$$= f_c\,(1 - e \cdot c)$$

Where f_p and f_c are as before

e = a constant depending on the material.

The following values of e may be taken :—

For mild steel	e	=	·0053
,, wrought iron	e	=	·0053
,, cast iron	e	=	·008
,, timber	e	=	·0083

As in Rankine's formula the values of constants vary considerably according to different authorities.

(*d*) **Johnson's Parabolic Formula.**—This is also an empirical formula devised to agree with Euler for long lengths, and to agree with the ordinary compression strength for short lengths. It is of the form

$$f_p = f_c\left\{1 - g\left(\frac{L}{k}\right)^2\right\}$$
$$= f_c\,(1 - g \cdot c^2)$$

g is a constant of such value as to make the curve of f_p plotted against c tangential to Euler, and the curve is used up to the point where it meets the Euler curve.

The following values may be taken for g :—

For mild steel	g	=	·000057
,, wrought iron	g	=	·000039
,, cast iron	g	=	·00016

Digitized by Google

(*e*) **Gordon's Formula.**—This formula is often confused with Rankine's, and was used largely for some time, but it is now quickly going out of use in favour of the Rankine formula. This is probably due to the fact that designers are now more used to making calculations involving the radius of gyration, a quantity which practical men have usually looked upon with suspicion. Now that tables are published giving k for most sections, it is as easy to use as the diameter d.

Gordon's formula is of the form

$$f_p = \frac{f_c}{1 + j \cdot \left(\frac{L}{d}\right)^2}$$

Where f_c, f_p, and L have their usual meaning.

j is a constant depending on the material *and on the shape of the section.*

d is the least diameter or breadth of the section.

The objection to this formula as compared with Rankine's lies in the fact that one has to use different constants for different shapes of section for the same material. Otherwise it is very similar to Rankine's.

The following values for j may be taken, f_c being the same as in Rankine :—

Shape of Section	j			
	Mild Steel	Wrought Iron	Cast Iron	Timber
Solid circle ...	$\frac{1}{370}$	$\frac{1}{500}$	$\frac{1}{110}$	$\frac{1}{125}$
Hollow circle ...	$\frac{1}{600}$	$\frac{1}{800}$	$\frac{1}{180}$	$\frac{1}{200}$
L, T, H, &c. ...	$\frac{1}{300}$	$\frac{1}{400}$	$\frac{1}{90}$	$\frac{1}{100}$
Built-up sections ...	$\frac{1}{400}$	$\frac{1}{550}$	—	—
Rectangle (solid) ...	$\frac{1}{500}$	$\frac{1}{700}$	$\frac{1}{120}$	$\frac{1}{160}$

Digitized by Google

(*f*) **Fidler's Formula.**—The reader is referred to Fidler's *Bridge Construction* for a very complete analysis of the strut problem.

The formula which Mr. Fidler obtains gives the breaking stress, and is:

$$\text{Minimum breaking stress} = \frac{f + R + \sqrt{(f + R)^2 - 2mfR}}{m}$$

Where f = ultimate pure compressive strength of material

R = Euler's breaking stress $= \frac{\pi^2 E}{c^2}$

m = a constant of average value 1·2.

The following values of f_p, the safe stress in tons per sq. in. for struts, are suggested by Fidler and are used by some authorities.

$\frac{L}{k}$	Mild Steel		Wrought Iron		Cast Iron	
	Pin Ends	Fixed Ends	Pin Ends	Fixed Ends	Pin Ends	Fixed Ends
20	5·20	5·29	3·92	3·99	8·07	8·65
40	4·76	5·09	3·64	3·89	5·68	7·56
60	4·02	4·83	3·17	3·73	3·35	6·10
80	3·15	4·45	2·60	3·48	1·96	4·68
100	2·40	4·00	2·03	3·17	1·29	3·35
120	1·83	3·46	1·57	2·82	·93	2·37
140	1·42	2·96	1·24	2·48	·70	1·78
160	1·13	2·51	·98	2·14	·56	1·40
180	·91	2·13	·80	1·84	·43	1·14

Use of Strut Formulæ.—Fig. 154 shows curves of f_p for mild steel for various values of the buckling factor according to the first four formulæ. It is advisable to draw such a curve to a good scale, choosing one of the formulæ—say Rankine—with $a = \frac{1}{6000}$; such curve can then be used whenever the value of f_p is required.

Digitized by Google

It will be remembered that f_p gives the safe stress per sq. in. for struts *with central loads*. If the loads are eccentric we must proceed as described later.

Then if A = area of section of strut,

$$\text{Safe load} = P_s = f_p \cdot A.$$

If, as often occurs in practice, we are given the load but have

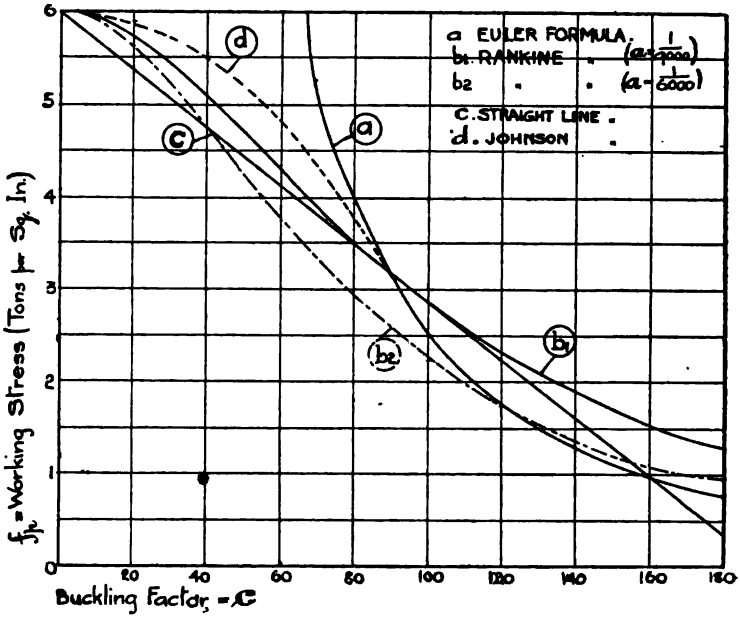

Fig. 154.—*Curves for various Column or Strut Formulæ.*

not designed the section, so that we do not know the buckling factor, we can often get a rough idea by taking a trial value of f_p equal to about $\frac{2}{3} f_c$, *i.e.*, 4 tons per sq. in. for steel, and finding the area requisite for this stress. This will give us an idea of the area required, and we can choose a section with roughly this area, and see by finding its buckling factor what is the safe load on it.

Many of the leading constructional steelwork firms publish tables of safe loads on various struts. Having previously checked one or two to see that these firms work with similar formulæ, we

Digitized by Google

can choose a suitable section for our case, and then apply our formula and see if such section is satisfactory.

Braced Columns, Struts, and Stanchions.—Struts are often formed of rolled sections such as beams and channels braced together by diagonal bracing or plates. The strut that failed in the Quebec Bridge was a braced strut, and the report of the Commission states that there is not yet sufficient information for the design of such struts for very heavy loads. For ordinary comparatively light work, however, braced struts such as shown in Fig. 154*a* are satisfactory and economical. The unbraced length of one of the beams or channels must be such that the load per sq. in. on them is not more than the safe stress for them considered as struts. We can get an idea of the maximum unbraced length as follows:—

Let c = buckling factor of whole strut.
„ k_1 = least radius of gyration of one channel or beam.
„ P = total load carried by strut.
„ 2 A = total area of strut.
„ S = maximum unbraced length of channel or beam.

Then, using Euler's Formula, $\frac{P}{2A} = \frac{\pi^2 E}{5 c^2} = \frac{B}{c^2}$

Each channel or beam carries ½ load

$$\therefore \frac{\frac{1}{2}P}{A} = \text{stress} = \frac{\pi^2 E k_1^2}{5 S^2} = \frac{B k_1^2}{S^2}$$

$$\therefore \frac{B}{c^2} = \frac{B k_1^2}{S^2}$$

$$\therefore S = k_1 c$$

Or, since $c = \frac{\text{Equivalent length of strut}}{\text{Least radius of gyration of whole strut}} = \frac{L}{k}$

$$\frac{S}{L} = \frac{k_1}{k}$$

$$\therefore \frac{L}{S} = \text{least number of panels} = \frac{k}{k_1}$$

$$= \frac{\text{Least radius of gyration of whole strut}}{\text{Least radius of gyration of channel or beam.}}$$

As a rule a spacing of 2 to 3 times the breadth B or 30° to 45° inclination of the diagonals will be found to be satisfactory, and

Digitized by Google

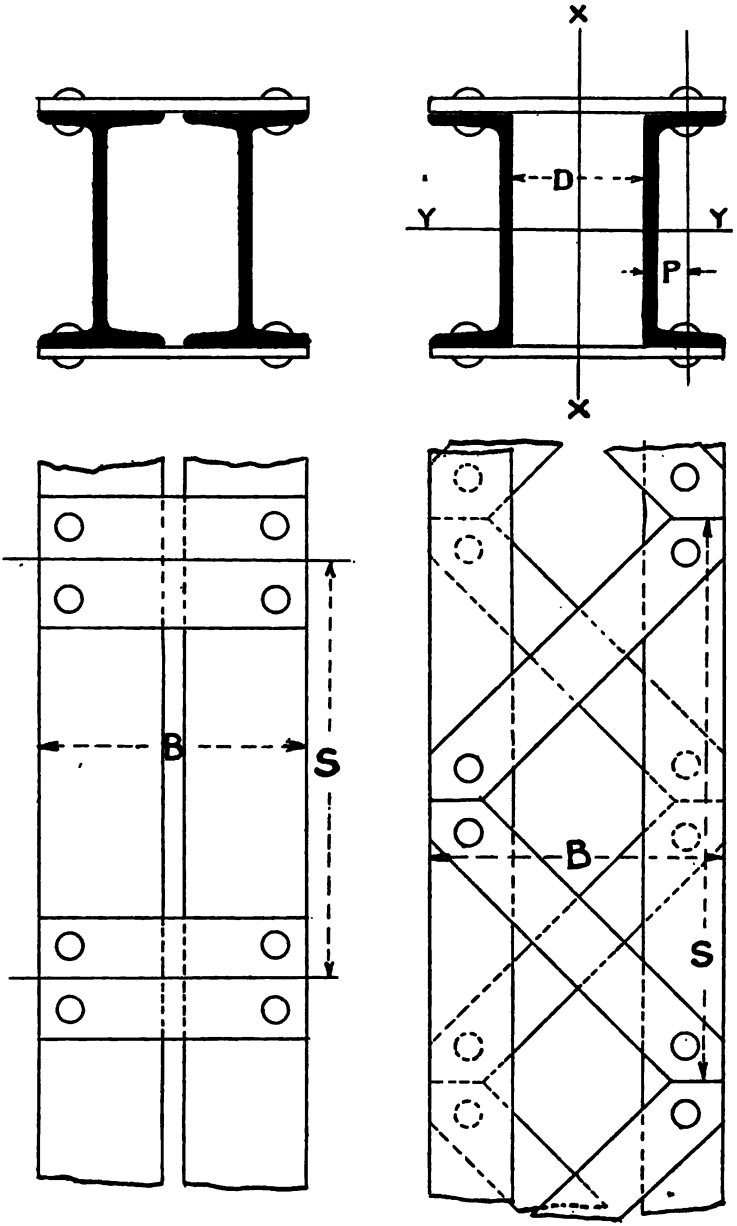

Fig. 154a.—Columns with Open Webs.

Digitized by Google

in practice would be adopted, unless the calculation required them to be less.

The strength of the strut in this case is calculated as if the section consisted of the two channels or beams held at the requisite distance apart. See worked Example No. 4.

Least Radius of Gyration.—The least radius of gyration will be about or at right angles to an axis of symmetry if there be one, so that in this case we need only calculate k for the axis of symmetry and at right angles to it. If there is no such axis we should proceed as indicated on p. 67.

Examples on Struts, &c., with Central Loads.—The following numerical examples should make the question of the question of the design of struts, &c., clear.

(1) *A* 10″ × 6″ × 42 *Standard* ⌶ *beam of mild steel is used as a stanchion, the length being* 16 *ft. and one end being fixed and one end pin-jointed. Find the safe load for it to carry.*

From the table of standard sections we see :—

$$A = 12{\cdot}35 \text{ sq. in.}$$

$$\text{Least } k = 1{\cdot}36$$

$$\therefore \text{ Buckling factor} = c = \frac{\text{equivalent length}}{1{\cdot}36} = \frac{2L}{3k}$$

$$= \frac{2 \times 16 \times 12}{3 \times 1{\cdot}36} = 94{\cdot}2 \text{ about}$$

$$\therefore \text{ Safe stress} = f_p = \frac{6}{1 + \frac{94{\cdot}2^2}{6000}} \text{ using Rankine's formula}$$

$$= \frac{6}{1 + 1{\cdot}47} = 2{\cdot}43 \text{ tons per sq. in.}$$

$$\therefore \text{ Safe load} = 12{\cdot}35 \times 2{\cdot}43 = 30 \text{ tons.}$$

(2) *A solid cast-iron column,* 6 *inches in diameter and* 15 *feet long, is fixed at the lower end and carries a load at its free upper end. Calculate the load the column will safely carry, assuming a reasonable factor of safety.* (*B.Sc. Lond. 1907.*)

$$\text{In this case } k = \frac{D}{4} = 1{\cdot}5''$$

$$\text{Equivalent length} = 2L = 30$$

$$\therefore c = \frac{\text{equivalent length}}{k} = \frac{30 \times 12}{1{\cdot}5}$$

$$= 240$$

Digitized by Google

$$\therefore \text{ Safe stress per sq. in. } = f_p = \frac{7}{1 + \frac{240 \times 240}{1800}}$$

$$= \frac{7}{1 + 32}$$

$$= \cdot 212 \text{ tons per sq. in.}$$

$$\therefore \text{ Safe load } = \cdot 212 \times \frac{\pi \times 36}{4} = 6 \text{ tons}$$

$$\text{According to Euler } f_p = \frac{\pi^2 E}{5 c^2} = \frac{12{,}000}{c^2}$$

$$= \frac{12{,}000}{240 \times 240} = \cdot 208$$

$$\therefore \text{ Safe load } = \frac{\cdot 208 \times \pi \times 36}{4} = 5 \cdot 88 \text{ tons.}$$

(3) *A steel rolled joist is used as a strut with built-in ends, the length of the strut being* 15 *feet. Find from the data given below, the cross section of the joist, if it has to support a compressive load of* 40 *tons with a factor of safety of* 4.

(*a*) *The total depth of the cross section of the joist is twice the width of the flanges, and the thickness of metal is to be* $\frac{1}{8}$ *of the width of the flanges.*

(*b*) *The crushing strength of a short strut of this quality of steel is* 24 *tons per square inch.*

(*c*) *The constant in Rankine formula is* $\frac{1}{36{,}000}$. (*B.Sc. Lond. 1907.*)

In this problem we must first find the breaking stress from the formula. In this case we do not use the equivalent length of the strut because the constant is given for fixed ends.

$$\text{Breaking stress } = \frac{24}{1 + \frac{1}{36{,}000}\left(\frac{L}{k}\right)^2}$$

$$\therefore \text{ Safe stress } = \frac{\text{breaking stress}}{4} = \frac{6}{1 + \frac{1}{36{,}000}\left(\frac{L}{k}\right)^2}$$

Now let A = area of section
and let B = breadth of flange
then $2B$ = depth of beam
$\frac{B}{8}$ = thickness of metal.

$$\text{Then } A = \frac{2B \times B}{8} + \frac{B}{8}\left(2B - \frac{2B}{8}\right)$$

$$= \frac{B^2}{4} + \frac{7B^2}{32} = \frac{15B^2}{32} = \cdot 4687\, B^2$$

Digitized by Google

The least radius of gyration will be about an axis perpendicular to the flanges.

Then $$I = \frac{B}{4} \cdot \frac{B^3}{12} + \frac{7\,B}{4} \cdot \left(\frac{B}{8}\right)^3$$

$$= \frac{B^4}{48} + \frac{7\,B^4}{2048} = \cdot 02428\ B^4$$

$$\therefore k^2 = \frac{I}{A} = \frac{\cdot 02428\ B^4}{\cdot 4687\ B^2} = \cdot 0518\ B^2$$

$$\therefore \text{Safe stress} = \frac{40}{A} = \frac{6}{1 + \frac{15 \times 12 \times 15 \times 12}{36{,}000 \times \cdot 0518\ B^2}}$$

$$\therefore \frac{40}{\cdot 4687\ B^2} = \frac{6}{1 + \frac{9}{\cdot 518\ B^2}}$$

$$\therefore \left(1 + \frac{9}{\cdot 518\ B^2}\right) = \frac{6}{40} \cdot \cdot 4687\ B^2$$

$$= \cdot 15 \times \cdot 4687\ B^2$$

$$\therefore B^4 (\cdot 15 \times \cdot 4687 \times \cdot 518) - \cdot 518\ B^2 - 9 = 0$$

$$3 \cdot 64\ B^4 - 51 \cdot 8\ B^2 - 900 = 0$$

The solution of this quadratic gives

$$B^2 = 24 \cdot 6 \text{ nearly}$$

$$\text{say } B = 5$$

$\therefore$ Adopt a joist 10″ × 5″ with metal $\frac{5''}{8}$ thick.

We could work this problem roughly by the given rule, as follows:

$$\text{take } f_p = \frac{2}{3} \times 6 = 4$$

$$\therefore A = \frac{40}{4} = 10 \text{ sq. in.}$$

$$\therefore \frac{15\ B^2}{32} = 10$$

$$B^2 = \frac{10 \times 32}{15} = \frac{64}{3}$$

$$B = \frac{8}{\sqrt{3}} = 4 \cdot 62, \text{ say } 5''$$

(4) *A steel column in a bridge-truss has pin-jointed ends and is 26 feet long. It consists of two standard* 10″ × 3½″ × 28·21 *lb. channels placed* 4½ *inches apart. Find a safe load for the section.* (See Fig. 154.1).

On looking up the tables, we see that for a 10″ × 3½″ × 28·21 lb. channel,

$$A = 8 \cdot 296$$

$$k_{max.} = 3 \cdot 77$$

$$k_{min.} = \cdot 994$$

Dist. of C. G. from edge = P = ·933

Digitized by Google

Then for whole strut

$$k_{YY} = 3{\cdot}77$$

$$k_{XX}^2 = (D + p)^2 + k_{min.}^2$$

$$= 3{\cdot}183^2 + {\cdot}994^2$$

$$\therefore k_{XX} = 3{\cdot}33$$

$$\therefore c = \frac{\text{Length}}{\text{Least radius of gyration}} = \frac{26 \times 12}{3{\cdot}33}$$

$$= 93{\cdot}6$$

$$\therefore f_p = \frac{6}{1 + \frac{93{\cdot}6 \times 93{\cdot}6}{6000}} = \frac{6}{2{\cdot}46}$$

$$= 2{\cdot}44$$

$$\therefore \text{Safe load} = 2{\cdot}44 \times \text{area}$$

$$= 2{\cdot}44 \times 2 \times 8{\cdot}296$$

$$= 40{\cdot}4 \quad \text{say } \underline{40 \text{ tons}}$$

STRUTS WITH ECCENTRIC LOADING.

If the thrust in a strut is out of the centre, *i.e.*, where there is bending moment as well as direct thrust on the strut, we cannot use the same rules for design as in the ordinary case.

In such case we may proceed as follows: Let the load W be at distance x from the centroid of the cross section, then $M = W.x$ (Fig. 155).

CASE 1—VERY SHORT STRUTS.—If the length is less than 10 times the least diameter of the strut, the stresses are obtained as shown on p. 169.

$$i.e. \quad f_c = \frac{W}{A} + \frac{M}{Z_c}$$

$$f_t = \frac{M}{Z_t} - \frac{W}{A}$$

In this case

$$f_c = \frac{W}{A} + \frac{Wx}{Z_c}$$

$$= \frac{W}{A} + \frac{W.x.d_c}{A k^2}$$

$$= \frac{W}{A}\left(1 + \frac{x d_c}{k^2}\right)$$

$$\therefore \frac{W}{A} = \frac{f_c}{1 + \frac{x d_c}{k^2}}$$

This gives the safe load W for a compressive stress f_c. This case is fully dealt with in Chapter VI.

Digitized by Google

CASE 2—STRUTS LONGER THAN 10 DIAMETERS.—In this case we must make some allowance for buckling tendencies, and we may proceed as follows.

As in the previous case we have :

$$\text{Combined compressive stress} = \frac{W}{A}\left(1 + \frac{x\,d_c}{k^2}\right)$$

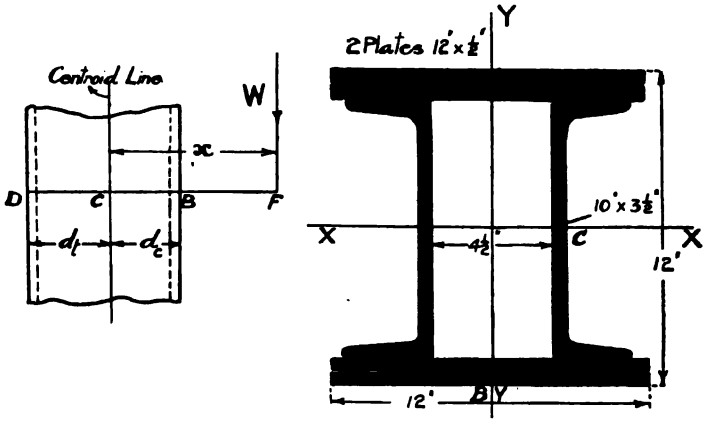

Fig. 155.—*Columns with Eccentric Loads.*

Now in this case this compressive stress should not be more than the safe stress per sq. in. obtained by considering the buckling formulæ.

$$i.e., \quad \frac{W}{A}\left(1 + \frac{x\,d_c}{k^2}\right) = f_p$$

$$\frac{W}{A} = \frac{f_p}{\left(1 + \frac{x\,d_c}{k^2}\right)}$$

$$i.e., \text{ Safe eccentric load on strut} = \frac{\text{Safe central load on strut}}{\left(1 + \frac{x\,d_c}{k^2}\right)}$$

where x = eccentricity of load

d_c = distance from centroid to edge of section nearest load

k = radius of gyration about axis perpendicular to the plane containing the centroid and the load.

Digitized by Google

This formula may be put into a form which is sometimes more useful as follows :

Let W_1 be the central load, which is equivalent to the eccentric load W.

$$\text{Then} \quad W_1 = W\left(1 + \frac{x\,d_c}{k^2}\right)$$

Then $\frac{W_1}{W}$ may be called the *eccentricity factor* for the strut.

In using this formula it should be noted that it is worked on the assumption that the buckling will take place in the plane of the figure, and so the value of k for the strut in this direction should be used in finding the safe central load.

If the safe eccentric load according to this formula comes more than the safe central load for the least value of k (this can of course only occur when the least value of k is about the axis D B), the lower value should of course be used.

Stanchions with Web and Flange Connections.—The loads on stanchions are often communicated from girders connected by cleats, &c., to the web or flange of the stanchion. If such connections come on one side only, or if the loads communicated from the two sides are not equal, the load will not be central, and allowance for the eccentricity should be made.

NUMERICAL EXAMPLE.—*A mild steel stanchion* 30 *feet long and with ends fixed has the section shown in Fig.* 155. *Find the safe central load and also the safe loads communicated at the points* B *and* C.

In this case A = 40·59 sq. ins.

k_{XX} = 4·87 „ „

k_{YY} = 3·41 „ „

$$\therefore \text{Buckling factor} = c = \frac{L}{2k} = \frac{30 \times 12}{2 \times 3{\cdot}41} = 52{\cdot}8$$

$$\therefore f_p = \frac{6}{1 + \frac{52{\cdot}8 \times 52{\cdot}8}{6000}} = \frac{6}{1{\cdot}464} = 4{\cdot}10$$

$\therefore$ Safe central load = 40·59 × 4·10 = 166 tons nearly.

Load at C.— $x = 2{\cdot}25 + {\cdot}575 = 2{\cdot}725$

$\therefore d_c = 6''$

$$\therefore \frac{x\,d_c}{k^2} = \frac{2{\cdot}725 \times 6}{3{\cdot}41^2} = 1{\cdot}41$$

$$\therefore \text{Safe eccentric load at C} = \frac{166}{1 + 1{\cdot}41} = 49 \text{ tons nearly.}$$

Digitized by Google

Load at B.—We must now first calculate f_p as if k_{xx} were minimum radius of gyration, *i.e.*, $c = \frac{30 \times 12}{2 \times 4{\cdot}87} = 36{\cdot}9$.

$$\therefore f_{p'} = \frac{6}{1 + \frac{36{\cdot}9 \times 36{\cdot}9}{6000}} = 4{\cdot}89$$

$$x = 6''$$

$$d_c = 6''$$

$$\therefore \frac{x d_c}{k^2} = \frac{6 \times 6}{4{\cdot}87^2} = 1{\cdot}52$$

$$\therefore \text{Safe eccentric load at B} = \frac{4{\cdot}89 \times 40{\cdot}59}{1 + 1{\cdot}52}$$

$$= \frac{4{\cdot}89 \times 40{\cdot}59}{2{\cdot}52}$$

$$= 77{\cdot}7 \text{ tons nearly.}$$

In this case the eccentricity factors for C and B are 2·41 and $\frac{166}{77{\cdot}7} = 2{\cdot}14$ respectively.

A rough rule is to use $2\frac{1}{2}$ and $1\frac{1}{2}$ as eccentricity factors for flange and web connections respectively, but such rule is not very good for the above case. It is more nearly true for I beams used as stanchions.

Cast-iron Struts Eccentrically Loaded.—In dealing with cast-iron struts with eccentric loads it must be remembered that they will probably fail by tension.

The safe load W from the tension standpoint

$$= \frac{f_t A}{\left(\frac{x d_t}{k^2} - 1\right)}$$

where f_t is the safe tensile stress, and this should be compared with the safe load from the compression standpoint, and the lower value adopted.

Conclusion. — In concluding the chapter on struts, we should like to emphasise again the fact that the chief difficulty lies in the choice of the safe stresses per sq. in. for various values of the buckling factor. In using various formulæ for obtaining such stresses, the reader is warned that he should be very careful to see that they are based either on the results of very reliable experiments, or that they conform to the two conditions that for very small values of the buckling factor they agree with the safe, pure compressive stress, and for large values they agree with

Digitized by Google

Euler's results. The best thing to work from is a curve plotted as suggested, or a table as given for Fidler's formula, or as given in Messrs Dorman, Long, & Co.'s Section Book.

The worked example on eccentric loading of stanchions should show how quickly the strength is reduced for a small eccentricity, and thus how desirable it is in practice to have the loads as central as possible.

We will deal with further practical points in connection with stanchions and with stanchion caps, bases, and foundations in Chapter XVI.

Digitized by Google

CHAPTER XIII.

SUSPENSION BRIDGES AND ARCHES.

SUSPENSION BRIDGES.

Stresses in Hanging Cables. — Suppose a number of weights W_1, W_2, W_3, be suspended from points (Fig. 156), on a cable held between two points A and E; then if the cable is perfectly flexible it must be straight between the loads. Consider the point at which W_1 acts; the load W_1 is kept in equilibrium by the two

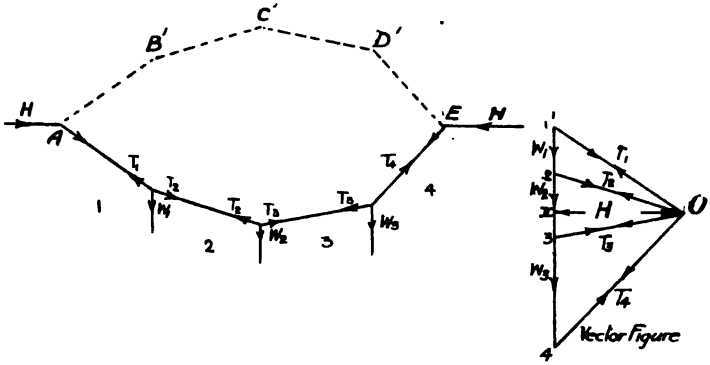

Fig. 156.—Stresses in Loaded Cable.

tensions T_1 and T_2, and therefore these three forces can be represented by the triangle 1, 2, o. Similarly W_2 is kept in equilibrium by T_2 and T_3, and these forces are represented by the triangle 2, 3, o, and so on for all of the weights. Since all the loading on the cable is vertical, there can be no difference in the horizontal component of the tension in the cable at various points along the span. It will be seen from the vector figure that such is the case since o x is the horizontal component of each of the tensions. It will be seen by comparing the two figures that they bear to each

Digitized by Google

other the relation of link and vector polygons, and so we get the following rule for loaded cables:

The shape which a loaded cable takes up is the same as the link polygon for the given load system drawn from one support to the other with a polar distance equal to the horizontal component H of the pull in the cable.

Theoretical Arch. — Since there is only tension in the cable, the portions between the loads could be replaced by pin-jointed links. If the whole were then inverted to the dotted position, there would be compression only in the members. A B′ C′ D′ E would then be the *theoretical arch* for the given system of loading.

Suspension Bridge with a Uniform Load.—Take the case of a suspension bridge carrying a uniform load by a number

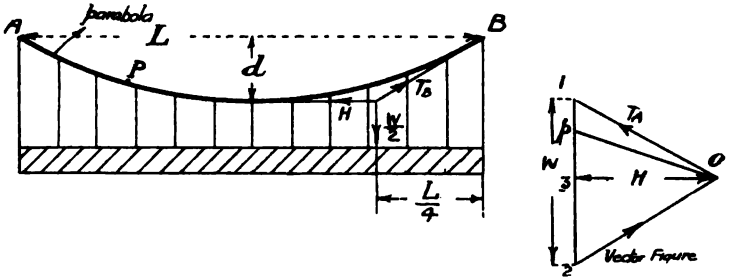

Fig. 157.—*Suspension Bridge with Uniform Load.*

of cables. Let the span be L (Fig. 157), the dip or sag of the cable *d*, and the weight carried by each cable W. Then the shape of the cables will be parabolic, because the link polygon or B.M. Diagram for a uniform load is a parabola, and the horizontal pull and the maximum tension in the cable can be obtained by considering one-half B C of the cable It is kept in equilibrium by the three forces T_B the tension of the cable at B, H the horizontal pull at C, and $\frac{W}{2}$ the load on half the cable. The forces meet at a point, and by taking moments about B we get

$$H \times d = \frac{W}{2} \times \frac{L}{4}$$

$$\therefore H = \frac{W\,L}{8\,d}$$

Digitized by Google

It will be noted that this is the same as the force in the flange at the centre of a framed girder, and as the approximate force in the flange of a plate girder of the same depth and span. The tension at any point P in the cable can be obtained by drawing o p on the vector figure parallel to the cable at the given points. The value of the maximum tension T_A or T_B can be found from the vector diagram as follows:

$$o\,1^2 = o\,3^2 + 3\,1^2$$

$$T_A^2 = H^2 + \left(\frac{W}{2}\right)^2$$

$$= \frac{W^2 L^2}{64 d^2} + \frac{W^2}{4}$$

$$= \frac{W^2}{4}\left(1 + \frac{L^2}{16 d^2}\right)$$

$$i.e., T_A = \frac{W}{2}\sqrt{\left(1 + \frac{L^2}{16 d^2}\right)}$$

∴ If A is the area of the cable and f the safe tensile stress

$$f . A = \frac{W}{2}\sqrt{\left(1 + \frac{L^2}{16 d^2}\right)}$$

LENGTH OF CABLE.—If a cable is hung in a parabolic curve of span L and dip d, then the length of the rope is approximately given by

$$S = L + \frac{8 d^2}{3 L}$$

$$\text{or } S = L + \cdot 23\, d \qquad \text{(Trautwine.)}$$

STRESSES IN ANCHOR CABLES. — There are two chief methods by which the cables of suspension bridges are anchored down:—

(1) In the first method the cable passes continuously over rollers at the top of the pier.

In this case the tension will be the same in the anchor cable as the maximum tension T, but if the inclinations of the anchor and bridge cables are not the same, there will be a horizontal overturning force on the pier and, as the latter will be of considerable height, the effect of this force in causing bending moment at the base will be rather great.

Digitized by Google

In Fig. 158, let $a\,b$ and $a\,e$ be equal to the tension in the cable, then $b\,c$ and $d\,e$ are the horizontal components of the tension

$$\therefore\ b\,c - e\,d = \text{horizontal force acting on pier}$$
$$= T(\sin\theta - \sin\alpha)$$
$$= H\left(1 - \frac{\sin\alpha}{\sin\theta}\right)$$

$a\,c$ and $a\,d$ are the vertical components of tension

$$\therefore\ a\,c + a\,e = \text{total vertical pressure on pier}$$
$$= T(\cos\theta + \cos\alpha)$$

But $T\cos\theta = \frac{W}{2}$ (see Fig. 157)

$$\therefore\ \text{Vertical pressure on pier} = \frac{W}{2}\left(1 + \frac{\cos\alpha}{\cos\theta}\right)$$

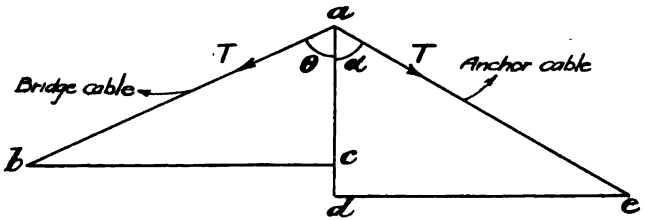

Fig. 158.—*Stresses in Anchor Cables.*

(2) In the second method the anchor and bridge cables are attached to saddles mounted on rollers on the top of the pier. As a resul of this, the tensions in the anchor and bridge cables will not always be the same, but there will be no horizontal force on the pier.

To get the tension T_1 in the anchor cable set out $a\,b = T$, Fig. 159, and resolve horizontally and vertically; then $b\,c$ is the horizontal component of the tension. Since there is no horizontal pull on the pier, the horizontal component of T_1 must be equal to $b\,c$. Therefore draw $a\,e$ in the direction of the anchor cable until the horizontal component $d\,e$ is equal to $b\,c$, then $a\,e$ gives the tension T_1.

Then we have $b\,c = d\,e$

i.e., $T\sin\theta = T_1\sin\alpha$

Digitized by Google

The vertical pressure on pier $= T \cos \theta + T_1 \cos \alpha$

$$= T \cos \theta + \frac{T \sin \theta \,.\, \cos \alpha}{\sin \alpha}$$

$$= T \cos \theta \,(1 + \tan \theta \cot \alpha)$$

$$= \frac{W}{2}(1 + \tan \theta \cot \alpha)$$

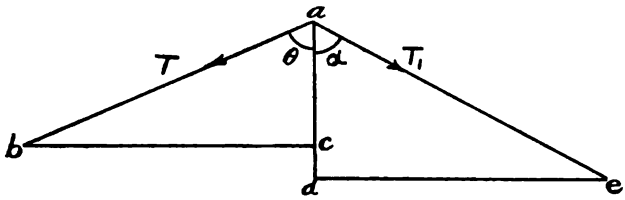

Fig. 159.—*Stresses in Anchor Cables.*

Stiffened Suspension Bridges.—Suspension bridges are unsuitable for rolling loads, since the shape changes as the load crosses and oscillations are then set up. In order to lessen these oscillations they are often 'stiffened' by means of stiffening girders. If these girders are pin-jointed or hinged at their centres, and are simply supported at their ends, the stresses in them can be ascertained simply as follows:—

Pin-jointed Stiffening Girders.—Load Uniform over Half Span.—Take first the case of a uniform load covering half the span, then the B.M. curve *a e c l b*, Fig. 160, for this load can be made to pass through the point *c*, by suitably choosing the polar distance *p*. Let H be the horizontal component of the pull in the cables, then the moment of H about $c = -H \times d$, while the B.M. due to the load at $c = p \times d$.

$\therefore$ Resultant B.M at $c = (p - H)\,d$. Since there is a pin joint at *c* the resultant B.M. must equal zero, $\therefore p = H$.

Consider any point *m* on the cable through which a vertical is drawn cutting the B.M. curve in *l* and the horizontal through *b* in *k*.

Then resultant B.M. at *m*

$$= p \times k\,l - H \,.\, k\,m = H\,(k\,l - k\,m)$$
$$= H \,.\, l\,m$$

Digitized by Google

Now B.M. at c due to load $= \frac{p\,L}{8} \cdot \frac{L}{2} = \frac{p\,L^2}{16}$

$$\therefore\ H \times d = \frac{p\,L^2}{16} \text{ or } H = \frac{p\,L^2}{16\,d}$$

We see from the above reasoning that cross-hatched curves give the B.M. acting on the girders. These two curves are themselves parabolas, and the maximum ordinate of each is equal to $\frac{p\,L^2}{64}$

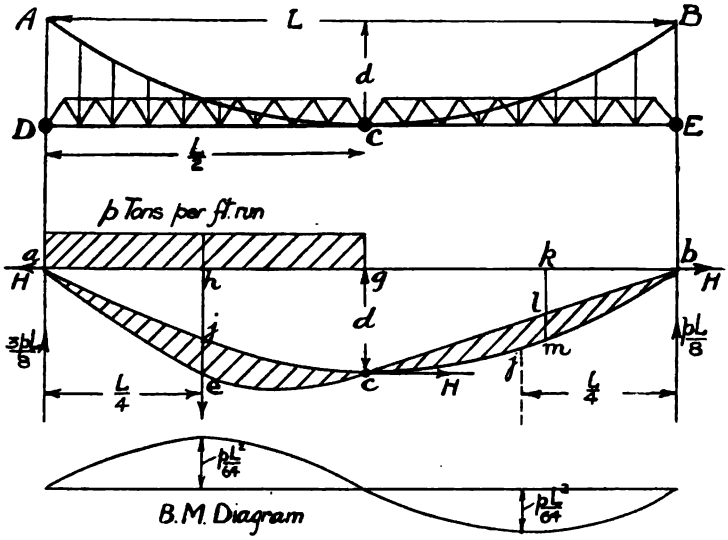

Fig. 160.—*Suspension Bridge with Hinged Stiffening Girders.*

This can be shown for the mid point f of $b\,c$ as follows:—

Ordinate of parabola $= \frac{3}{4}\,d$

„ straight line $= \frac{1}{2}\,d$

$$\therefore \text{ Resultant B.M. at } f = H\left(\frac{3}{4}\,d - \frac{1}{2}\,d\right) = H \cdot \frac{1}{4}\,d$$

$$= \frac{p\,L^2}{16\,d} \cdot \frac{d}{4} = \frac{p\,L^2}{64}$$

Digitized by Google

Similarly considering the point e in the portion $c\,a$

Ordinate of parabola $= hj = \frac{3}{4}d$

Ordinate of B.M. curve $= he = \frac{3pL}{8} \cdot \frac{L}{4} - \frac{pL}{4} \cdot \frac{L}{8}$

$$= \frac{pL^2}{16} \quad (i.e., he = d)$$

$\therefore$ Resultant B.M. at $e = \frac{pL^2}{16} - H \cdot \frac{3}{4}d$

$$= \frac{pL^2}{16} - \frac{3pl^2}{64} = \frac{pL^2}{64}$$

Summing up the above results, we see that between A and C the girder pulls down on the cable, and is thus subjected to a downward uniform load of intensity $\frac{p}{2}$, while between C and B the cable pulls up on the girder, and thus the girder is subjected to an upward uniform load of intensity $\frac{p}{2}$, the B.M. diagrams being as shown.

Uniform Load over Whole Span.—In this case there is no B.M. on the girders, the whole behaving as an unstiffened suspension bridge.

Irregular Load.—If the load is irregular, the B.M. is obtained as above by drawing the B.M. curve to pass through C, and taking the distance between the parabola and this B.M. curve, and multiplying by the polar distance to get the B.M. on the girder. The construction in this case is the same inverted as for a three-pinned arch (p. 375).

***Isolated Load rolling over Suspension Bridge Stiffened with Pin-jointed Girders.**—Let an isolated load W per cable roll over a stiffened suspension bridge, A C B, Fig. 161.

When the load is at distance a from the end A, and is on the portion D C, the B.M. on the stiffening girder C E at a point corresponding to m on the cable is equal to $H \times lm$. This is a maximum when H is a maximum, and $H = \frac{R_B \cdot L}{2d}$ d being as before the dip of the cable, so that H is a maximum when R_B is a maximum, *i.e.*, when W is above the point C.

Digitized by Google

Thus the maximum negative B.M. curve is a parabola of height $\frac{W L}{16}$, since the ordinate of the parabola is $\frac{3}{4}d$, so that the

$$\text{B.M} = H.\left(\frac{3}{4}d - \frac{1}{2}d\right) = \frac{W L}{4 d}.\frac{1}{4}d = \frac{W L}{16}$$

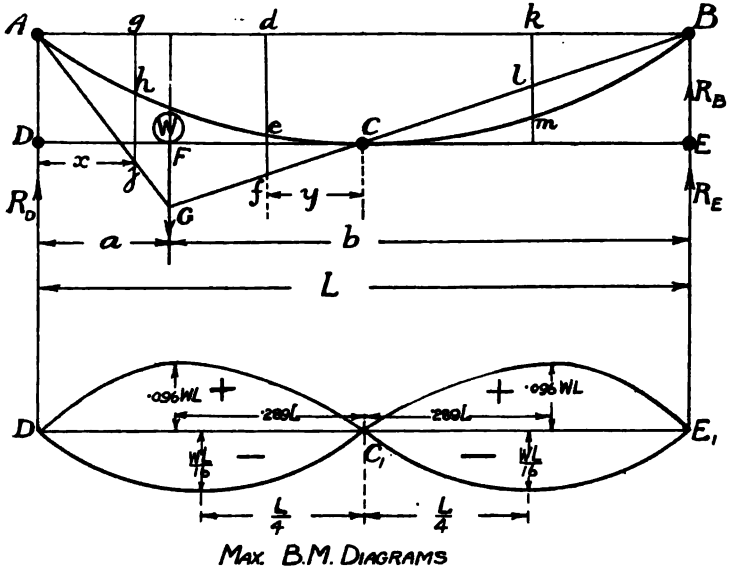

Fig. 161.—*Hinged Stiffening Girders with Isolated Rolling Load.*

Now consider a point between D and F at distance x from D.

$$\begin{aligned} M_X &= R_D.x - H.gh \\ &= \frac{W b}{L}.x - \frac{W a.L}{L\,2d}.gh \\ &= W\left(\frac{bx}{L} - \frac{a.gh}{2d}\right) \\ &= W\left\{\frac{(L-a)x}{L} - \frac{a.gh}{2d}\right\} \\ &= W\left\{x - a\left(\frac{x}{L} + \frac{gh}{2d}\right)\right\} \quad \ldots\ldots\ldots\ldots\ldots\ldots(1) \end{aligned}$$

Digitized by Google

As a increases, this decreases, so that the B.M. is a maximum just as the load leaves the given point. Now take a point beyond the load at a distance y from the centre C.

$$\text{Then } M_y = R_E\left(\frac{L}{2}+y\right) - H \cdot de$$

$$= R_E\left(\frac{L}{2}+y\right) - \frac{R_E \cdot L \cdot de}{2d}$$

$$= \frac{W a}{L}\left\{\left(\frac{L}{2}+y\right) - \frac{L \cdot de}{2d}\right\} \quad \ldots\ldots\ldots\ldots\ldots\ldots\ldots\ldots(2)$$

This increases as a increases, so that B.M. is a maximum just as the load reaches the given point.

We thus see that when the load is on one of the girders the B.M. is a maximum at any point when the load just reaches it.

Therefore, putting $a = \frac{L}{2} - y$ in equation (2), we get

$$\text{Max. } M_y = \frac{W\left(\frac{L}{2}-y\right)}{L}\left\{\left(\frac{L}{2}+y\right) - \frac{L}{2d} \cdot de\right\}$$

$$\text{Now } de = d - \frac{4d}{L^2} \cdot y^2$$

$$\therefore \text{Max. } M_y = \frac{W\left(\frac{L}{2}-y\right)}{L}\left\{\left(\frac{L}{2}+y\right) - \frac{Ld}{2d}\left(1 - \frac{4y^2}{L^2}\right)\right\}$$

$$= \frac{W\left(\frac{L}{2}-y\right)}{L}\left\{\frac{L}{2}+y-\frac{L}{2}+\frac{4y^2}{2L}\right\}$$

$$= \frac{W\left(\frac{L}{2}-y\right)}{L}\left\{y+\frac{4y^2}{2L}\right\}$$

$$= \frac{W\left(\frac{L}{2}-y\right)\left(1+\frac{2y}{L}\right)y}{L}$$

$$= \frac{W y\left(\frac{L}{2}-y\right)\left(L+2y\right)}{L^2} \quad \ldots\ldots\ldots\ldots\ldots\ldots\ldots\ldots(3)$$

$$= \frac{W y}{2L^2}(L^2 - 4y^2) \quad \ldots\ldots\ldots\ldots\ldots\ldots\ldots\ldots\ldots\ldots(4)$$

Digitized by Google

The maximum value will occur when

$$\frac{d}{dy}M_y = 0, \text{ i.e., } L^2 - 4y^2 + y(-8y) = 0$$

$$L^2 - 12y^2 = 0$$

$$y = \frac{L}{\sqrt{12}} \text{ i.e., } \cdot 289\,L$$

∴ Maximum B.M. occurs when load is ·289 L from centre.

$$\text{Then } M = \frac{W \times \cdot 289\,L\left(L^2 - \frac{L^2}{3}\right)}{2L^2} = \cdot 096\,W\,L$$

The maximum B.M. diagram is then as shown in the figure, the positive and negative B.M.s being measured above and below the base line respectively.

***Uniform Load rolling over Suspension Bridge Stiffened with Pin-jointed Girders.**—Let a uniform load of intensity p per cable be rolling over the span, and let the front have reached the point G, Fig. 162. Then the B.M. at any point along the girder C B′ when the load is on the other side will be proportional to $H = \frac{R_B \cdot l}{D}$, and so the maximum B.M. at each point along C B′ will occur when R_B is a maximum, *i.e.*, when the front of the load reaches C.

Now consider a point E between C and G and at distance y from C.

$$M_E = R_B \cdot B_1 E - H \cdot d$$

$$= R_B \cdot (l + y) - \frac{R_B\, l \cdot d}{D}$$

$$= R_B \left\{ y + l\left(1 - \frac{d}{D}\right)\right\}$$

$$= R_B \left(y + \frac{l \cdot y^2}{l^2}\right)$$

$$= R_B y \left(1 + \frac{y}{l}\right) \quad \ldots\ldots\ldots\ldots\ldots\ldots\ldots\ldots (1)$$

This increases as R_B increases, *i.e.*, as the load comes farther on to the span.

Digitized by Google

Next consider a point F between A_1 and G and at distance z from C.

$$M_F = R_B \cdot B_1 F - H \cdot d_1 - \frac{p \cdot FG^2}{2}$$

By reasoning similar to above, $R_B \cdot B_1 F - H d_1 = R_B z \left(1 + \frac{z}{l}\right)$

$$\therefore M_F = R_B z \left(1 + \frac{z}{l}\right) - \frac{p(z-x)^2}{2} \quad \ldots\ldots\ldots\ldots\ldots\ldots(2)$$

$$= \frac{p(l-x)^2 z}{2L}\left(1 + \frac{z}{l}\right) - \frac{p(z-x)^2}{2} \quad \ldots\ldots\ldots(3)$$

This will decrease as x increases if $\frac{d M_F}{d x}$ is negative.

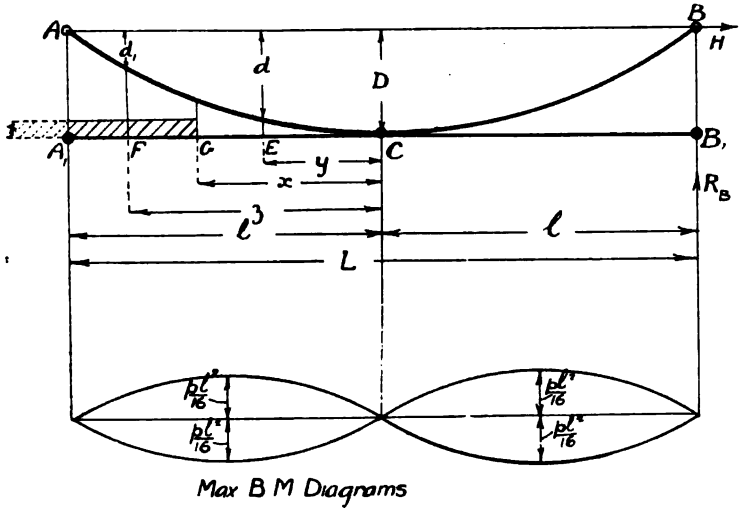

Fig. 162.—*Hinged Stiffening Girders with Uniform Rolling Load.*

Now $\frac{d M_F}{d x} = \frac{p z}{2L}\left(1 + \frac{z}{l}\right) \cdot 2(l-x)(-1) - \frac{p}{2} \cdot 2(z-x)(-1)$

$$= -p\left\{\frac{z(l+z)}{L \cdot l}(l-x) - (z-x)\right\}$$

$$= -p\left\{\frac{z(1+z)(l-x)}{2l^2} - (z-x)\right\}$$

Digitized by Google

$$= \frac{-p}{2l^2}\left\{z(l+z)(l-x) - 2l^2(z-x)\right\}$$
$$= -p\{l^2z + lz^2 - x(lz+z^2) - 2l^2z + 2l^2x\}$$
$$= -p\{lz(l-z) + x(2l^2 - lz - z^2)\}$$
$$= -p\{lz(l-z) + x(2l+z)(l-z)\}$$
$$= \frac{-p}{2l^2}(l-z)\{lz + x(2l+z)\} \quad \ldots\ldots\ldots\ldots\ldots (4)$$

Now $(l-z)$ must be positive, because z must be $< l$.

$\therefore$ Above expression is negative.

$\therefore$ B.M. decreases as x increases.

$\therefore$ B.M. increases as x decreases.

$\therefore$ B.M. increases as load comes further on the span.

$\therefore$ Max. B.M. at all points on span A′C occurs when front of load reaches C.

Therefore curves of maximum positive and negative B.M. are as shown on the figure, the max. B.M. in each case being

$$\frac{p\,l^2}{16} = \frac{p\,L^2}{64}.$$

***Stiffening Girders not Pin-jointed at Centre.**—If the stiffening girders are not pin-jointed at the centre they will have to bear considerable stresses due to the difference in dip due to changes in temperature, and such stresses may amount to as much as half the safe stresses. In this case the stresses are more difficult to calculate, but in the case of uniform loading they may be obtained as follows:

Let A C B, Fig. 163, be a suspension bridge cable provided with a stiffening girder $A_1 B_1$ supported at the ends, and let a uniform load of intensity p per cable, rolling on the bridge, have reached the point E at distance x from A_1. Then, since the cable is *made* to hang as a parabola, there must be a uniform load of intensity q pulling down on the cable and therefore up on the stiffening girder.

Then we have total load on cable $= q\,L = p\,x$

$$\therefore q = \frac{p\,x}{L} \quad \ldots\ldots\ldots\ldots\ldots\ldots\ldots (1)$$

$\therefore p\,x$ and $q\,L$ form a couple of moment $= p\,x\,\frac{(L - x)}{2}$

Digitized by Google

This couple must be balanced by the reactions R_{A_1} and R_{B_1}.

$$\therefore \; - R_{B_1} L = + R_{A_1} L = p x \frac{(L - x)}{2}$$

$$\therefore R_{A_1} = - R_{B_1} = \frac{p x (L - x)}{2 L} \quad \ldots\ldots\ldots\ldots (2)$$

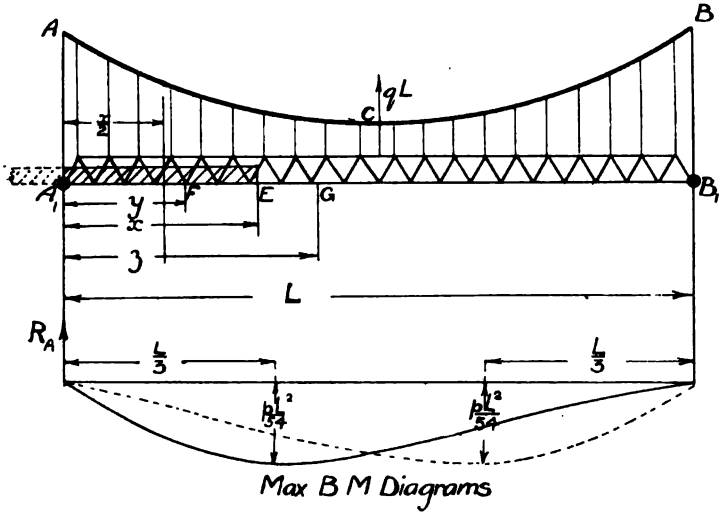

Fig. 163.—*Stiffening Girder without Central Hinge.*

Now consider a point F between E and A, and at distance y from A_1.

Then B.M. at F $= M_F = R_{A_1} (y) - (p - q) \frac{y^2}{2} \quad \ldots\ldots\ldots\ldots (3)$

$$= \frac{p x y (L - x)}{2 L} - p \left(1 - \frac{x}{L}\right) \frac{y^2}{2}$$

$$= \frac{p (L - x)}{2 L} \left\{x y - y^2\right\}$$

$$= \frac{p (L - x) (x - y) y}{2 L} \quad \ldots\ldots\ldots\ldots (4)$$

Next consider a point G betweeen E and B_1 and at distance z from A_1.

Digitized by Google

$$\text{Then } M_G = R_{A_1} z - (p - q) x \cdot \left(z - \frac{x}{2}\right) \quad \ldots\ldots\ldots\ldots (5)$$

$$= \frac{p x z (L - x)}{2 L} - p \left(1 - \frac{x}{L}\right) x \cdot \left(\frac{2 z - x}{2}\right)$$

$$= \frac{p x (L - x)}{2 L} \left\{z - 2 z + x\right\}$$

$$= \frac{p x (L - x) (x - z)}{2 L} \quad \ldots\ldots\ldots\ldots (6)$$

In equations (4) and (6) the B.M. = o when $x = y$ and $x = z$ respectively.

∴ Front of load is always a point of contraflexure of the girder, and we will assume that B.M. in $A_1 E$ is a maximum at the mid point, *i.e.*, when $y = \frac{x}{2}$.

$$\therefore \text{Maximum B.M. in } A_1 E = \frac{p (L - x)}{2 L} \cdot \frac{x^2}{4}$$

$$= M = \frac{p x^2 (L - x)}{8 L} \quad \ldots\ldots\ldots\ldots (7)$$

This is a maximum when $\frac{d M}{d x} = o$

i.e., when $2 x (L - x) + x^2 (-1) = o$

$$i.e., x = \frac{2 L}{3} \quad \ldots\ldots\ldots\ldots (8)$$

Thus the maximum B.M. occurs when the load covers two-thirds of the span, and is equal to

$$\text{Maximum B.M. on span} = \frac{p}{8 L} \cdot \frac{L}{3} \cdot \frac{4 L^2}{9} = \frac{p L^2}{54} \quad \ldots\ldots\ldots (9)$$

The maximum B.M. is therefore equal to $\frac{p L^2}{54}$ and occurs at one-third of the span.

The maximum B.M. diagrams are then of the form shown in the figure, the dotted diagram being for the load approaching from the other side.

ARCHES.

An arch may be looked upon as an inverted suspension bridge or *vice versa*, the cable in the suspension bridge being in tension and the portions of the arch being in compression. For any given

Digitized by Google

system of loading a theoretical arch can be designed so as to be in compression only, the centre line of the arch coinciding, as we shall show later, with the link polygon drawn with the polar distance equal to the horizontal component of the thrust in the arch.

If an arch were made up of jointed links as in a cable, it

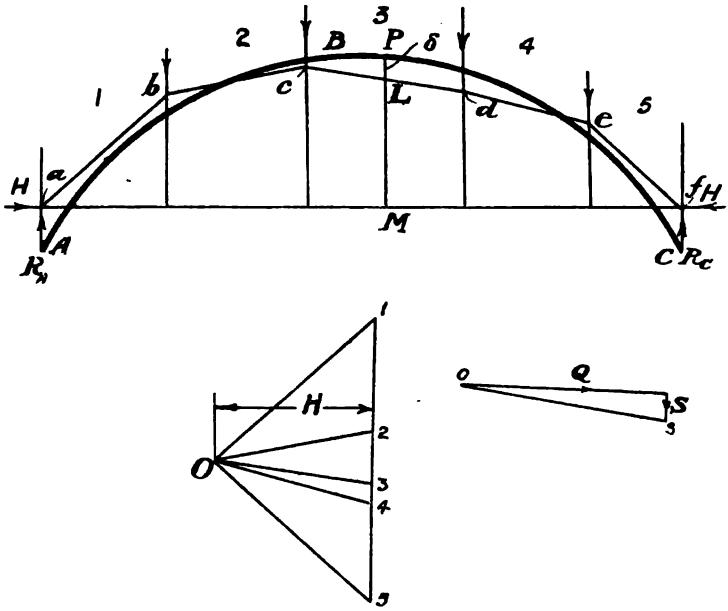

Fig. 164.—*Stresses in Arches. Eddy's Theorem.*

would be in unstable equilibrium, as it would collapse if the load were altered, and so in practice we have to make it capable of resisting bending moment.

The arch is a structure of great antiquity and of considerable beauty, and is also a very economic structure.

Line of Pressure or Linear Arch.—For any given arch, if the link polygon be drawn for the loading on it with a polar distance equal to the horizontal thrust in the arch, such polygon is called the *line of pressure or linear arch.* Throughout

Digitized by Google

this chapter we will use the former term as we have previously used this in similar connections (see p. 138).

Eddy's Theorem.—Let A B C, Fig. 164, be the centre-line of an arch loaded in any manner, and suppose that the line of pressure is *a b c d e f*. Then take any point P on the arch and draw a vertical through P, cutting the line of pressure in L and the line *a f* in M.

Then B.M. at P = L M × polar dist. − moment of H about P.

$$= \text{L M} \times \text{H} - \text{P M} \cdot \text{H}$$
$$= \text{H}(\text{L M} - \text{P M}) = -\text{H}(\text{P l})$$
$$= -\text{H} \cdot \delta.$$

Therefore the B.M. at any point of an arch is equal to the product of the Horizontal Thrust into the vertical intercept between the centre line of the arch and the line of pressure.

This is Eddy's Theorem.

Stresses in Arch.—To obtain the stresses in the arch consider the point P, and first resolve the corresponding thrust $O_1 3$ along and perpendicular to the direction of the centre line of the arch at the given point, thus obtaining a thrust Q and a shearing force S.

Then if A, Z_c, Z_t, f_c, f_t have their usual values, we have

Maximum compressive stress $= f_c = \dfrac{Q}{A} + \dfrac{M}{Z_c}$

$$= \frac{Q}{A} + \frac{H \cdot \delta}{Z_c} \quad \ldots\ldots\ldots\ldots (1)$$

Maximum tensile stress $= f_t = \dfrac{M}{Z_t} - \dfrac{Q}{A}$

$$= \frac{H \cdot \delta}{Z_c} - \frac{Q}{A} \quad \ldots\ldots\ldots\ldots (2)$$

Mean shear stress over section $= \dfrac{S}{A}$ ..... (3)

Determination of Horizontal Thrust (H).—It follows from the foregoing that as soon as we have determined the horizontal thrust (H) in an arch, we can easily determine the stresses in it. Practically, the whole difficulty in the design of arches consists in the determination of this horizontal thrust. It

Digitized by Google

can be determined accurately by quite simple means in three cases only, viz.:

(1) A parabolic arch uniformly loaded.
(2) A parabolic arch with uniform load over half span.
(3) A three-pinned arch.

In other cases, we shall have to find the horizontal thrust by means of the **Theory of Rigid Arches,** which we will deal with later. We will now deal with these simple cases in turn.

Parabolic Arch Uniformly Loaded (Fig. 165).—In this case the line of pressure coincides with the centre line of the

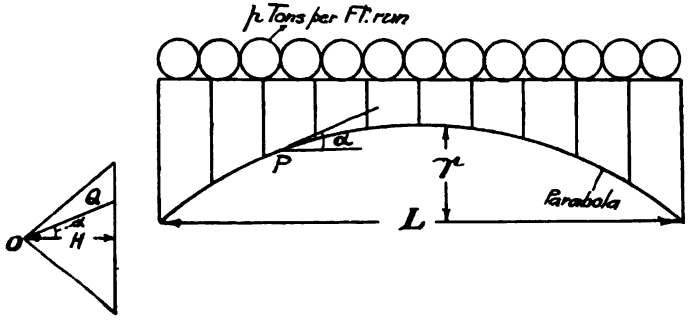

Fig. 165.—*Parabolic Arch with Uniform Load.*

arch, so that the moment of the horizontal thrust about the centre must be equal to the B.M. at the centre, that is $\frac{p L^2}{8}$

$$\therefore H \times r = \frac{p L^2}{8}$$

$$\text{or } H = \frac{p L^2}{8 r}$$

In this case there will be no B.M. on the arch, and the thrust Q at any point P on the arch is obtained by drawing through O on the vector line a line at direction α parallel to the direction of the arch at the given point, or else obtain the thrust by calculation since

$$Q = H \sec \alpha$$

Digitized by Google

Parabolic Arch with Uniform Load over Half Span.—It follows from symmetry that, in the case of the parabolic arch uniformly loaded, the load on each half of the span must contribute equally to the horizontal thrust, so that in the present case the horizontal thrust will be half that of the previous case. Therefore, in this case,

$$H = \frac{p L^2}{16 r}$$

and the line of pressure comes as shown on Fig. 166.

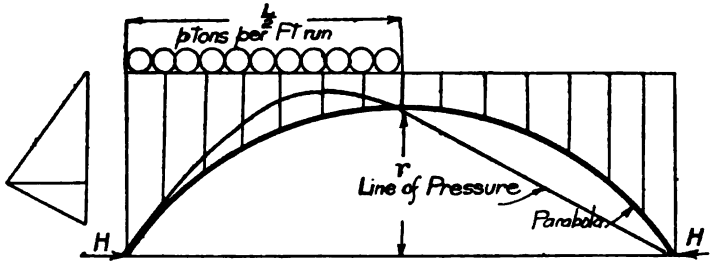

Fig. 166.—*Parabolic Arch half covered with Uniform Load.*

Three-pinned Arches.—If an arch is provided with three pin-joints or hinges—in most cases one at the *top or crown*, and one at each end of the *abutments or springings*—the line of pressure must pass through each of these three joints, since there can be no B.M. there, and the horizontal thrust can be determined by this means, as follows:

Let A, B, C, Fig. 167, be an arch with pin-joints at A, B, and C, and let it be subjected to any load system 0, 1, 2, 3, 4. Set down the loads on a vector line 0, 4 and taking any pole P_1 draw the link polygon *a b c d e f*—preferably well above or below the arch to avoid confusion. Draw P_1 X parallel to the closing link *a f*, and draw a horizontal line through X and a vertical through P_1, thus obtaining a new pole P_2. If a fresh link polygon were drawn with P_2, the ordinates would be the same as those of the polygon *a b c d e f*, but the base would be horizontal.

Through C draw a vertical line cutting the link polygon in *g h* and A B in D.

Digitized by Google

Then if a point o on P_2 X be taken so that $o X = \frac{P_2 X \times g h}{C D}$, the link polygon would pass through c, because the ordinates of the link polygon are inversely proportional to the polar distance.

If the link polygon A b_1 c_1 d_1 e_1 B be drawn with the new pole o, this link polygon is the line of pressure, and o X gives the horizontal thrust H.

$$i.e.,\ H = \frac{P_2 X \times g h}{C D}$$

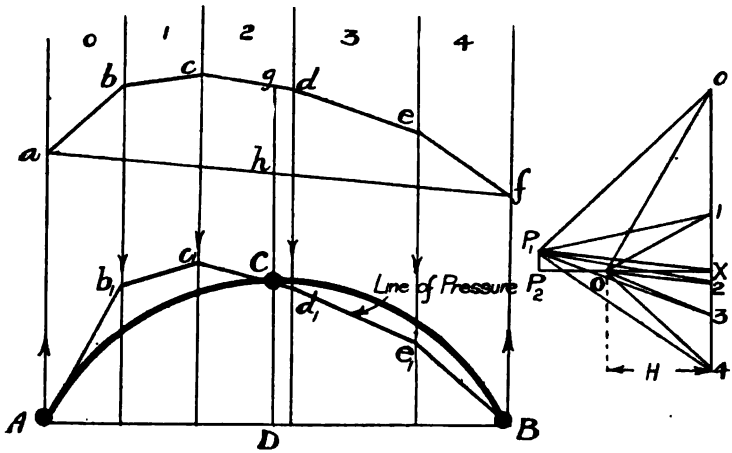

Fig. 167.—*Three-pinned Arch.*

Having obtained the horizontal thrust and the line of pressure, the stresses are obtained as previously explained.

Three-pinned arches have thus the advantage that the stresses in them are easily determined ; they have also the advantage that they have no stresses due to change in temperature. Compared with rigid arches, they have the disadvantage that the deflections are greater.

Line of Pressure through any Three Points.— Although the joints in a three-pinned arch are almost invariably in practice placed as indicated in Fig. 167, they need not theoretically be so. In fact, the stresses would be less if one pin

Digitized by Google

were placed at the crown and the other two between the crown and the springings. The following construction will enable us to draw the line of pressure through any three points, and will thus

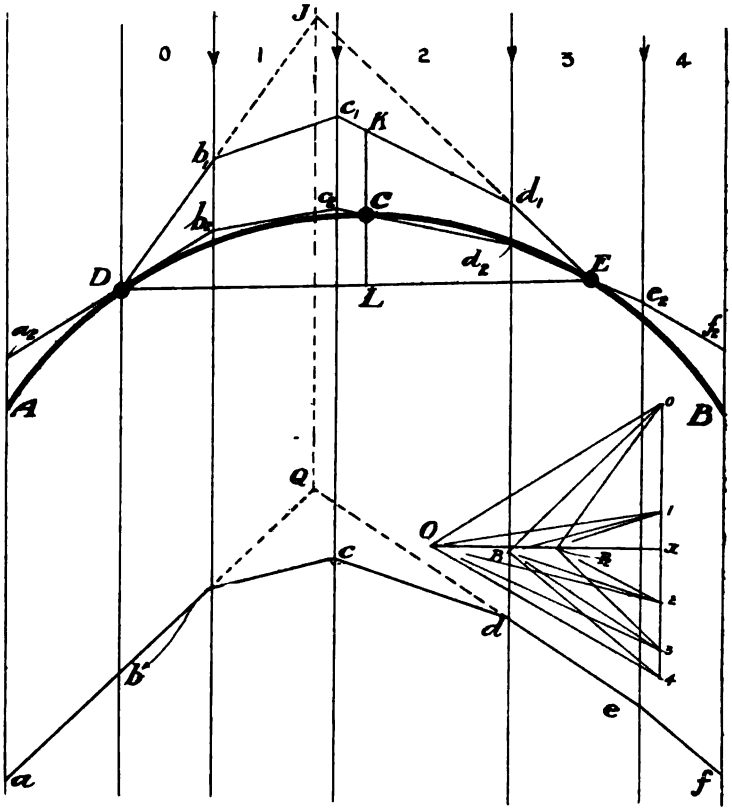

Fig. 168.—*Link Polygon through three given Points.*

enable us to deal with the case in which the three pins are placed in any position.

Let A C B, Fig. 168, be an arch or other structure subjected to any load system 0, 1, 2, 3, 4, and let it be required to draw a link polygon through the three points D, C, E.

Digitized by Google

Setting down the loads on a vector line o, 4, and taking any pole P, draw the link polygon *a b c d e f*. Let the links *a b*, *d e*, across the spaces in which the outside points D E lie, be produced to meet in Q. Take any point J on the vertical through Q and join J D, J E, and from the corresponding points o, 3 on the vector diagram draw o P_2, 3 P_2 parallel to J D, J E, thus obtaining a new pole P_2. With this pole draw the portion of the link polygon D b_1 c_1 d_1 E.

Join D E, and draw a vertical through C cutting D E in L and the link polygon in K.

Now take a new pole O on the horizontal through P_2 such that

$$\frac{O\,x}{P_2\,x} = \frac{K\,L}{C\,L}$$

$$i.e.,\ O\,x = \frac{K\,L \times P_2\,x}{C\,L}$$

Then the link polygon a_2 b_2 c_2 d_2 e_2 f_2 drawn with the pole O will pass through the three points D, C, E.

Rolling Loads on Three-pinned Arches. — The bending moments on a three-pinned arch as a load crosses will be the same as those on a suspension bridge stiffened with pin-jointed girders, and so will be as shown in Figs. 161 and 162, for isolated and uniform loads.

RIGID ARCHES.

General Conditions of Strain.—We will first find the relation between the shape of an arch and the thrust and B.M. for

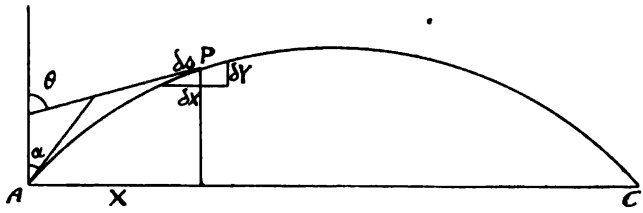

Fig. 169.—*Rigid Arches.*

the general case, and will then take the application to special kinds of arches.

Let P be any point on an unstrained arch A P C, Fig. 169, the

Digitized by Google

ordinates of P being x and y, and let the inclination of the arch at P to the vertical be θ and the inclination at A, α.

Consider a short length δs of the arch at P, then we have :

$$R = \frac{\delta s}{\delta \theta} \quad \ldots\ldots\ldots\ldots\ldots\ldots\ldots\ldots\ldots\ldots (1)$$

R being the radius of curvature at P and $\delta\theta$ the angle between the tangents at the extremities of the short length.

$$\text{Also } \delta x = \delta s \,.\, \sin\theta = R \sin\theta\, \delta\theta \ldots\ldots\ldots\ldots\ldots\ldots (2)$$

$$\delta y = \delta s \,.\, \cos\theta = R \cos\theta\, \delta\theta \ldots\ldots\ldots\ldots\ldots\ldots (3)$$

After strain let the various quantities be written with subscript 1, then we have after strain—

$$R_1 = \frac{\delta s_1}{\delta \theta_1} \ldots\ldots\ldots\ldots\ldots\ldots\ldots\ldots\ldots\ldots (4)$$

$$\delta x_1 = \delta s_1 \sin\theta_1 = R_1 \sin\theta_1\, \delta\theta_1 \ldots\ldots\ldots\ldots (5)$$

$$\delta y_1 = \delta s_1 \cos\theta_1 = R_1 \cos\theta_1\, \delta\theta_1 \ldots\ldots\ldots\ldots (6)$$

$\therefore x - x_1 = \xi =$ change in horizontal position of P

$$= \sum_{A}^{P} \left(\delta x - \delta x_1\right)$$

$$= \sum_{A}^{P} \left(\delta s \sin\theta - \delta s_1 \sin\theta_1\right)$$

$$= \sum_{A}^{P} \left\{\delta s\,(\sin\theta - \sin\theta_1) - (\delta s_1 - \delta s)\sin\theta_1\right\}$$

$$= \sum_{A}^{P} \left\{\delta s \,.\, 2\cos\left(\frac{\theta + \theta_1}{2}\right)\sin\left(\frac{\theta - \theta_1}{2}\right) - (\delta s_1 - \delta s)\sin\theta_1\right\}$$

$$= \sum_{A}^{P} \left\{\delta s \,.\, \cos\theta\,(\theta - \theta_1) - (\delta s_1 - \delta s)\sin\theta_1\right\} \ldots\ldots\ldots\ldots (7)$$

because since $\theta - \theta_1$ is very small, we may write

$$\cos\left(\frac{\theta_1 + \theta}{2}\right) = \cos\theta \text{ and } \sin\left(\frac{\theta - \theta_1}{2}\right) = \frac{\theta - \theta_1}{2}$$

Now we have already proved that for bending generally—

$$\frac{1}{R} - \frac{1}{R_1} = \frac{M}{E\,I}$$

$$\left(\frac{1}{R} - \frac{1}{R_1}\right) = \frac{\delta\theta}{\delta s} - \frac{\delta\theta_1}{\delta s_1}$$

Digitized by Google

$$= \frac{\delta\theta}{\delta s} - \frac{\delta\theta_1}{\delta s} + \frac{\delta\theta_1}{\delta s} - \frac{\delta\theta_1}{\delta s_1}$$

$$= \frac{\delta\theta}{\delta s} - \frac{\delta\theta_1}{\delta s}\left(1 - \frac{\delta s_1 - \delta s}{\delta s_1}\right)$$

$$= \left(\frac{\delta\theta - \delta\theta_1}{\delta s}\right) \quad \ldots\ldots\ldots\ldots\ldots\ldots\ldots\ldots(8)$$

The term $\frac{\delta s_1 - \delta s}{\delta s_1}$ being of the second order and negligible

$$\therefore \delta\theta - \delta\theta_1 = \left(\frac{1}{R} - \frac{1}{R_1}\right)\delta s$$

$$= \frac{M}{EI} \cdot \delta s$$

$$\text{Now } \theta = \alpha + \sum_A^P \delta\theta$$

$$\theta_1 = \alpha_1 + \sum_A^P \delta\theta_1$$

$$\therefore \theta - \theta_1 = (\alpha - \alpha_1) + \sum_A^P \delta\theta - \sum_A^P \delta\theta_1$$

$$= (\alpha - \alpha_1) + \sum_A^P \left(\delta\theta - \delta\theta_1\right)$$

$$= (\alpha - \alpha_1) + \sum_A^P \frac{M}{EI} \cdot \delta s \quad \ldots\ldots\ldots\ldots\ldots\ldots(9)$$

Again $\frac{\delta s - \delta s_1}{\delta s}$ = unital strain of $\delta s = \frac{-Q}{EA}$,

Q being the thrust; E, Young's modulus; and A, the cross-sectional area.

We may also write to first approximation—

$$\frac{\delta s_1 - \delta s}{\delta s_1} = \frac{+Q}{EA} \quad \ldots\ldots\ldots\ldots\ldots\ldots\ldots(10)$$

Putting these results in equation (7) we get—

$$x = \sum_A^P \left\{\left(\sum_A^P \frac{M\,\delta s}{EI} + (\alpha - \alpha_1)\right) \cdot \delta s \cos\theta - \frac{Q}{EA} \cdot \delta s_1 \sin\theta_1\right\}$$

$$= \sum_A^P \left\{\delta y \left((\alpha - \alpha_1) + \sum_A^P \frac{M\,\delta s}{EI}\right) - \frac{Q\,\delta x_1}{EA}\right\} \quad \ldots\ldots\ldots\ldots\ldots (11)$$

$$= (\alpha - \alpha_1) \sum_A^P \delta y + \sum_A^P \left\{\delta y \sum_A^P \frac{M\,\delta s}{EI} - \frac{Q\,\delta x_1}{EA}\right\}$$

Digitized by Google

Since, as we shall show later, the term $\frac{Q\,\delta x_1}{E\,A}$ is comparatively small, we may replace it by $\frac{Q\,\delta x}{E\,A}$

$$\therefore x = (a - a_1)\,Y + \sum_A^P \left\{\delta Y \sum_A^P \frac{M\,\delta s}{E\,I} - \frac{Q\,\delta x}{E\,A}\right\} \quad \ldots\ldots\ldots\ldots(12)$$

$$\text{Now} \quad \sum_A^P \left\{\delta Y \sum_A^P \frac{M\,\delta s}{E\,I}\right\} = Y \sum_A^P \frac{M\,\delta s}{E\,I} - \sum_A^P \frac{M\,Y}{E\,I} \,.\, \delta s$$

This will be clear from consideration of the curve of $\Sigma \frac{M\,\delta s}{E\,I}$ plotted against Y (Fig. 170).

$$\therefore \text{We have } x = Y\left(a - a_1 + \sum_A^P \frac{M\,\delta s}{E\,I}\right) - \sum_A^P \left\{\frac{M\,Y\,\delta s}{E\,I} + \frac{Q\,\delta x}{E\,A}\right\} \quad (13)$$

This is the general expression for the horizontal movement of the point P due to the given loading.

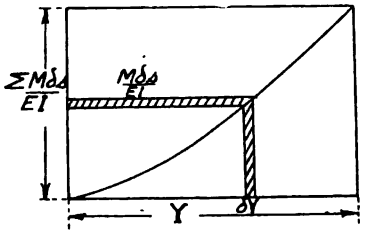

Fig. 170.

Again considering the vertical displacement,

$$Y - Y_1 = \text{change in vertical position of P}$$

$$= y' = \sum_A^P \left(\delta Y - \delta Y_1\right)$$

$$= \sum_A^P \left(\delta s \cos\theta - \delta s_1 \cos\theta_1\right)$$

$$= \sum_A^P \left\{\delta s\,(\cos\theta - \cos\theta_1) + (\delta s_1 - \delta s)\cos\theta_1\right\}$$

$$= \sum_A^P \left\{\delta s \,.\, 2 \sin\frac{\theta + \theta_1}{2} \,.\, \sin\frac{\theta_1 - \theta}{2} + (\delta s_1 - \delta s)\cos\theta_1\right\}$$

$$= \sum_A^P \left\{(\theta_1 - \theta) \,.\, \delta s \sin\theta + (\delta s_1 - \delta s)\cos\theta_1\right\}$$

Digitized by Google

Using the same reasoning as before—

$$= \sum_{A}^{P} \left\{ \left(a_1 - a - \sum_{A}^{P} \frac{M\,\delta s}{E\,I} \right) \delta x - \frac{Q\,\delta y}{E\,A} \right\}$$

$$= -x \left(a - a_1 + \sum_{A}^{P} \frac{M\,\delta s}{E\,I} \right) + \sum_{A}^{P} \left\{ \frac{M\,x\,\delta s}{E\,I} - \frac{Q\,\delta y}{E\,A} \right\} \ldots (13a)$$

This gives the general expression for the vertical movement of the point P due to the given loading.

Now consider the following special cases.

Two-pinned Arch, *i.e.*, an arch with pin joints at A and B. In this case as the span is inextensible, x for the point B = 0, and y for point B = 0.

∴ We have for point B

$$0 = -\sum_{A}^{B} \left\{ \frac{M\,y\,\delta s}{E\,I} + \frac{Q\,\delta x}{E\,A} \right\} \quad \ldots\ldots\ldots\ldots (14)$$

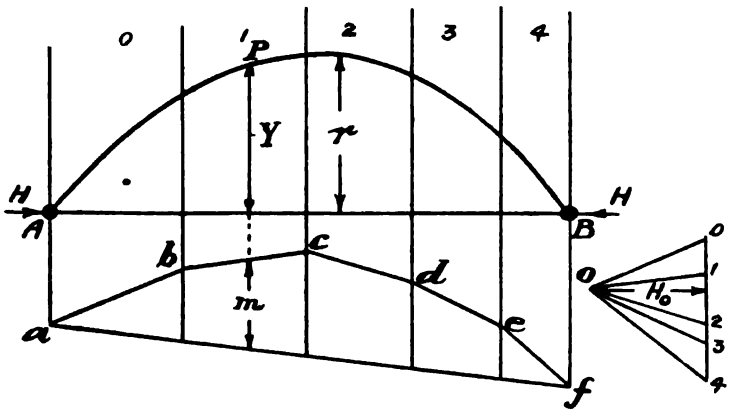

Fig. 171.—*Two-pinned Arch.*

Now M depends on the loading and on the horizontal thrust.

Let 0, 1, 2, 3, 4 be the load system, Fig. 171, and let *a b c d e f* be the link polygon drawn with a trial polar distance H_0; also let the ordinate of the link polygon at the point P be m.

Then if H is the horizontal thrust, the B.M. at the point P

$$= M = H \times y - H_0 . m$$

$$\therefore \Sigma \frac{M\,y\,.\,\delta s}{E\,I} = \Sigma \frac{H\,y^2\,\delta s}{E\,I} - \Sigma \frac{H_0\,m\,y\,\delta s}{E\,I}$$

Digitized by Google

$\therefore$ From equation (14)

$$\sum_{A}^{B} \frac{H\,y^2\,\delta s}{E\,I} - \sum_{A}^{B} \frac{H_o\,m\,y\,\delta s}{E\,I} + \sum_{A}^{B} \frac{Q\,\delta x}{E\,A} = o$$

$$i.e.,\ H \sum_{A}^{B} \frac{y^2\,\delta s}{k^2} - H_o \sum_{A}^{B} \frac{m\,y\,\delta s}{k^2} + \sum_{A}^{B} Q\,\delta x = o$$

$\therefore$ Assuming k is constant

$$H = \frac{H_o \sum_{A}^{P} m\,y}{\sum_{A}^{P} y^2} - \frac{k^2 \sum_{A}^{B} Q\,\delta x}{\sum_{A}^{B} y^2\,\delta s} \qquad \ldots\ldots\ldots\ldots\ (15)$$

We will now find a superior limit for the second term. For flat arches Q is nearly equal to H.

Taking arch as parabola $\sum_{A}^{B} y^2\,\delta s = 2 \sum_{A}^{B} . y\,\delta s . \frac{y}{2}$

$= 2 \times$ 1st moment of area about base A B (approx.)

$$= 2 \times \frac{4\,L\,r^2}{15} = \frac{8\,L\,r^2}{15}$$

$$\therefore \frac{k^2 \sum_{A}^{B} Q\,\delta x}{\sum_{A}^{B} y^2\,\delta s} = \frac{k^2 . H . L}{\frac{8\,L\,r^2}{15}} = \frac{15\,k^2}{8\,r^2} . H \text{ (approx.)}$$

Putting this in (15)

$$\therefore H = \frac{H_o \sum_{A}^{B} m\,y}{\sum_{A}^{B} y^2} - \frac{H \times 15\,k^2}{8\,r^2}$$

$$\text{or } H = \frac{H_o \sum_{A}^{B} m\,y}{\sum_{A}^{B} y^2} . \frac{1}{\left(1 + \frac{15\,k^2}{8\,r^2}\right)} \qquad \ldots\ldots\ldots\ldots\ (16)$$

The term $\frac{1}{1 + \frac{15\,k^2}{8\,r^2}}$ is neglected by many writers who give

$$H = \frac{H_o \sum_{A}^{B} m\,y}{\sum_{A}^{B} y^2} \qquad \ldots\ldots\ldots\ldots\ (17)$$

PROCEDURE TO FIND H.—We see, therefore, that in order to find the horizontal thrust for a two-pinned arch we first draw a trial line of pressure with a polar distance H_o, and then draw a

Digitized by Google

number of vertical lines, say 10 or preferably 20, *at equal distances along the arch apart.* We then add together the products of the ordinates of the arch and the trial line of pressure, and also add the squares of the ordinates arch—thus obtaining quantities which we will call the *load-arch sum* and the *arch-square sum* respectively.

The horizontal thrust $= H_o \times \frac{\text{load-arch sum}}{\text{arch-square sum}}$ approximately

or more accurately as shown in equation (16) above.

The link polygon drawn with this polar distance gives the true line of pressure, and the stresses are obtained as explained on p. 372.

If the arch is parabolic the arch-square sum is $\frac{15}{8} r^2$.

Thrust in Two-pinned Arch due to Changes in Temperature.—Let the temperature be t degrees above that at which the arch was erected and let β be the coefficient of expansion of the material. Suppose that the increase in temperature causes a horizontal thrust H_t. Then, if free to expand, the span would become $L(1 + \beta t) = L + L\beta t$. As the supports keep the span fixed the stresses will be the same as if we had given one support a movement inwards of $L\beta t$.

That is coming back to our general expression of equation (13).

$$x = -L\beta t = y\left(\alpha - \alpha_1 + \sum_A^B \frac{M\,\delta s}{E\,I}\right) - \sum_A^B \left\{\frac{M\,y\,\delta s}{E\,I} + \frac{Q\,\delta x}{E\,A}\right\}$$

$$= o - \sum_A^B . \frac{M\,y\,\delta s}{E\,I} - \sum_A^B \frac{Q\,.\,\delta x}{E\,A}$$

In this case H_t is the only force acting, so that $M = H_t\,y$

$$L\beta t = \sum_A^B \frac{H_t\,y^2\,\delta s}{E\,I} + \sum_A^B \frac{Q\,.\,\delta x}{E\,A}$$

$$= H_t \frac{\Sigma\, y^2\,\delta s}{E\,I}\left(1 + \frac{15}{8}\frac{k^2}{r^2}\right) \text{ approx.} \quad \text{(See p. 382.)}$$

$$\therefore H_t = \frac{E\,I\,L\beta t}{\Sigma\, y^2\,\delta s\left(1 + \frac{15}{8}\frac{k^2}{r^2}\right)} \quad \ldots\ldots\ldots\ldots\ldots\ldots\ldots\ldots \quad (18)$$

For flat arches, of dimensions such that $\frac{15}{8}\frac{k^2}{r^2}$ is negligible, we may take $\delta s = \delta x$.

Digitized by Google

In this case $\frac{L}{\delta s}$ = no. of sections of arch taken to obtain the arch-square sum = n

Then $H_t = \frac{E\,I\,n\,\beta\,t}{\text{arch-square sum}}$ ..... (19)

Doubly Built-in Arches.—Now take the case of an arch in which the ends of the arch are fixed in direction as well as in position.

Using the same notation as in the general case on p. 378, we see that considering the point B,

$$X = 0$$
$$Y = 0$$
$$\theta - \theta_1 = 0$$

Also considering the point A.

$$\alpha - \alpha_1 = 0$$

From equation (9).

$$\theta - \theta_1 = (\alpha - \alpha_1) + \sum_A^B \frac{M}{E\,I}\,\delta s$$

We see that for the point B,

$$0 = 0 + \sum_A^B \frac{M\,\delta s}{E\,I}$$

$$\therefore \sum_A^B M\,\delta s = 0 \quad \ldots\ldots (20)$$

From equation (13) we have

$$\sum_A^B \left\{ \frac{M\,y\,\delta s}{E\,I} + \frac{Q\,\delta x}{E\,A} \right\} = 0 \quad \ldots\ldots (21)$$

Neglecting the second term we get

$$\sum_A^B M\,y\,\delta s = 0 \quad \ldots\ldots (22)$$

Similarly from equation (13 *a*) we get

$$\sum_A^B M\,x\,\delta s = 0 \quad \ldots\ldots (23)$$

Now let *a*, *b*, *c*, *d*, *e*, Fig. 172, be a trial link polygon drawn with a polar distance H_o and let U U be a line—called the ***reduced base***—such that $\Sigma\,q = 0$ and $\Sigma\,q\,x = 0$.

Let $a_1\,b_1\,c_1\,d_1\,e_1$ be the true line of pressure of the arch, and Z Z the reduced base of the arch; and let the reduced base U U cut the trial link polygon in points $v\,v_1$, which projected vertically

Digitized by Google

upwards cut z z in T T_1. Then these points T T_1 must line on the true line of pressure, since this is the trial link polygon drawn to a different vertical scale.

As soon, therefore, as we have found the true horizontal thrust H, we can draw the true line of pressure, since it must pass through T and T_1.

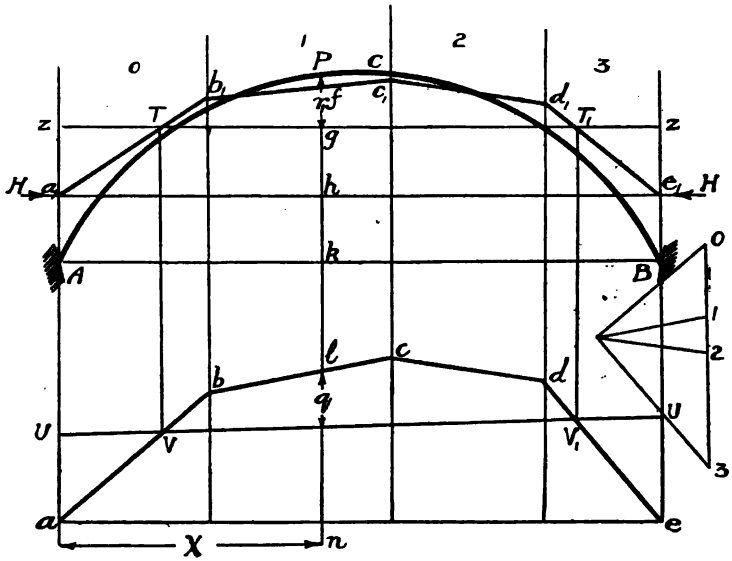

Fig. 172.—*Arch with Ends Built-in.*

Now, $M \delta s = H (P h - f h) \delta s$

$= H \delta s (P g - f g)$

$= (H . P g - H_0 . q) \delta s$

$\therefore \Sigma M = H \Sigma P g . \delta s - H_0 \Sigma q . \delta s$

= 0, since U U and z z are the reduced bases.

Therefore equation (20) is satisfied.

Again, $\Sigma M \times \delta s = H \Sigma P g . x \delta s - H_0 \Sigma q . x \delta s$

$= 0$

Therefore equation (23) is satisfied.

Digitized by Google

From equation (22)

$$\sum_{A}^{B} M \cdot y \cdot \delta s = 0$$

$$\therefore \sum_{A}^{B} (H \cdot P g - H_0 q) \cdot y \cdot \delta s = 0$$

$$\therefore H \sum_{A}^{B} y \cdot P g = H_0 \sum_{A}^{B} \cdot y \cdot q$$

$$\therefore H_0 \sum_{A}^{B} y \cdot r_1 = H_0 \sum_{A}^{B} y \cdot q$$

$$\therefore H = \frac{H_0 \sum_{A}^{B} \cdot y \cdot q}{\sum_{A}^{B} \cdot y r_1} \quad \ldots\ldots\ldots (24)$$

Now, if the arch is symmetrical, $g k$ is constant.

$$\text{Now, } \sum_{A}^{B} \cdot y \cdot r_1 = \sum_{A}^{B} (r_1 + g k) r_1 = \sum_{A}^{B} r_1^2 + g k \sum_{A}^{B} r_1$$

$$= \sum_{A}^{B} r_1^2 + 0 = \sum_{A}^{B} r_1^2$$

$$\sum_{A}^{B} y q = \sum_{A}^{B} (r_1 + g k) q = \sum_{A}^{B} r_1 q + g k \sum_{A}^{B} q$$

$$= \sum_{A}^{B} r_1 q + 0 = \sum_{A}^{B} r_1 q$$

$$\therefore H = \frac{H_0 \sum_{A}^{B} r_1 q}{\sum_{A}^{B} r_1^2} \quad \ldots\ldots\ldots (25)$$

This is the same as for the two-pinned arch, except that the ordinates r_1 and q are measured from the reduced bases.

$$\therefore H = \frac{H_0 \times \text{reduced load-arch sum}}{\text{reduced arch-square sum.}}$$

The procedure is thus the same as in the previous case, when the reduced bases have been determined. When H has been determined in this way, the line of pressure is drawn through T and T_1, and the stresses are obtained as before.

The expression (25) can be shown, as similarly in the two-pinned arch, to be more correctly expressed as

$$H = \frac{H_0 \sum_{A}^{B} r_1 q}{\sum_{A}^{B} r_1^2} \cdot \frac{1}{\left(1 + \frac{45 k^2}{4 r^2}\right)} \quad \ldots\ldots\ldots (26)$$

This corrective term is more important in this case.

Digitized by Google

The Determination of the Reduced Base Lines.—The conditions giving the position of the reduced base lines are almost the same as those for the base line of the B.M. curve of a beam with fixed ends, if the number of elements taken is large enough, and so the position of the reduced base can be found as shown on p. 232 for the fixed beam.

In symmetrical flat curves—as the arch will nearly always be—the height of the reduced base line above the base will be equal to the mean ordinate, or equal to $\frac{\text{area between arch and base}}{\text{span}}$

and in the case of the parabolic arch will be $\frac{2}{3}r$.

Thrust in Doubly Built-in Arches due to Temperature.—By similar reasoning to that on p. 383 we get

$$-\text{L}\beta t = -\sum_{\text{A}}^{\text{B}} \frac{\text{M y}\,\delta s}{\text{E I}} - \sum_{\text{A}}^{\text{B}} \frac{\text{Q}\,\delta x}{\text{E A}}$$

In this case the only load is horizontal, and line of pressure closes up into the reduced base line.

∴ Reduced base line is line of pressure for temperature stresses.

$$\therefore \text{H}_t \text{ acts along base line}$$

$$\therefore \text{M} = \text{H}_t \times r$$

$$\therefore \text{L}\beta t = \text{H}_t \sum_{\text{A}}^{\text{B}} \frac{r\,\text{y}\,\delta s}{\text{E I}} + \Sigma \frac{\text{Q}\,\delta x}{\text{E A}}$$

$$\text{taking } \delta s = \delta x = \frac{\text{L}}{n}$$

$$\text{E I}\beta t = \left\{\frac{\text{H}_t}{n} \sum_{\text{A}}^{\text{B}} r\,\text{y}\right\} \left(1 + \frac{45\,k^2}{4\,r^2}\right)$$

$$\text{Now } \sum_{\text{A}}^{\text{B}} r\,\text{y} = \sum_{\text{A}}^{\text{B}} r^2$$

$$\therefore \text{H}_t = \frac{\text{E I}\,n\beta t}{\sum_{\text{A}}^{\text{B}} r^2 \left(1 + \frac{45\,k^2}{4\,r^2}\right)}$$

If, as before, we neglect the term depending on $\frac{k}{r}$ we get

$$\text{H}_t = \frac{\text{E I}\,n\beta t}{\text{reduced arch-square sum}}$$

Digitized by Google

Live Load on Rigid Arches.—In dealing with live loads on rigid arches it is generally assumed that the maximum stresses occur when one-half of the span is covered. The actual amount of span which has to be covered to produce the maximum stresses in arches depends on the ratio of the rise to the span, and on the nature of the load, and is a very troublesome problem to determine. For a circular arch with a uniform load it is very nearly $\frac{5}{8}$ of the span. In most cases the assumption of half-span is close enough, and it has the advantage of not requiring a separate calculation from the thrust due to dead load.

If the dead load is uniform and of intensity p, and produces a horizontal thrust H, and if the live load is uniform and of intensity p_1, and produces a horizontal thrust H_1 when the span is half covered, then

$$H_1 = \frac{p_1 H}{2p}$$

Note on Drawing for Arches.—In ordinary comparatively flat arches the distances between the centre line of the arch and the line of pressure will be extremely small, and thus the bending moments will be difficult to determine accurately. For this reason it is desirable to magnify the vertical ordinates of the arch five or ten times—a circular arch thus becoming elliptical—in dealing with the stresses in arches. If this is done, the polar distance for obtaining the line of pressure must be reduced in the same ratio.

The above treatment of rigid arches is necessarily incomplete owing to our lack of space to deal at greater length with it. For the best theoretical treatment the reader should consult *The Graphics of Metal Arches*, by L. W. Atcherley and Prof. Karl Pearson, F.R.S. (Drapers' Company Research Memoirs, Technical Series III., published by Dulau & Co., London).

Masonry arches are dealt with in the next chapter.

Digitized by Google

CHAPTER XIV.

MASONRY STRUCTURES.

General Conditions of Stability.—Masonry structures are generally designed so that there is only compression stress between the blocks of which the structure is composed. Although mortar has some tensile strength, it is usual in British practice to assume that the mortar can bear no tensile stress, and also that the adhesion between the masonry and the mortar is negligible, so that the shear or tangential force must not be greater than the natural friction between masonry and masonry. We have, therefore, the following conditions to be satisfied in masonry structures.

(1) There must be no tensile stress across a cross section.

(2) The maximum compressive stress must be within the safe stress for the material.

(3) The shearing force must not be greater than the natural friction between the masonry.

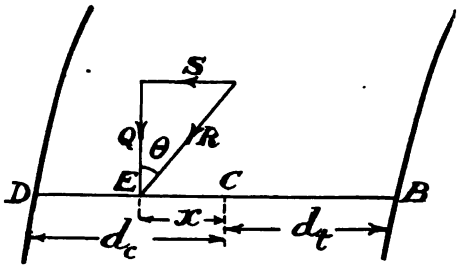

Fig. 173.

CONDITION 1. — Let DB (Fig. 173) represent the cross section of a masonry structure, C being the centroid, and let the line of pressure (see p. 138) cut the cross section at the *load-point* E, R being the resultant force on the cross section. Then R can be resolved into a shearing force S and a direct thrust Q. Then

Digitized by Google

the direct compression stress per sq. in. $= \frac{Q}{A}$ where A = area of cross section.

There will also be a bending moment equal to $Q \times CE = Q \times x$, and if k is the radius of the cross section there will be a compression stress due to bending equal to $\frac{M}{Z_c} = \frac{Q \times x \times d_c}{A k^2}$ and a tensile stress equal to $\frac{M}{Z_t} = \frac{Q \times x \times d_t}{A k^2}$

$\therefore$ Combined compressive stress $= f_c = \frac{Q}{A} + \frac{Q x d_c}{A k^2}$

$$= \frac{Q}{A}\left(1 + \frac{x d_c}{k^2}\right) \ldots\ldots\ldots (1)$$

Combined tensile stress $= f_t = \frac{Q x d_t}{A k^2} - \frac{Q}{A}$

$$= \frac{Q}{A}\left(\frac{x d_t}{k^2} - 1\right) \ldots\ldots\ldots (2)$$

Our first condition is that there must be no tensile stress.

$\therefore$ $\frac{x d_t}{k^2} - 1$ must be negative,

$\therefore$ $\frac{x d_t}{k^2}$ must be less than 1,

$\therefore$ x " " " $\frac{k^2}{d_t}$

$\therefore$ The maximum possible value of x is given by

$$x = \frac{k^2}{d_t} \ldots\ldots\ldots\ldots\ldots\ldots\ldots (3)$$

Now consider the following special cases (Fig. 174):

(*a*) *Solid Rectangular Cross Section.*—This is the most usual case in masonry structures.

If DB $= b$, $k^2 = \frac{b^2}{12}$ and $d_c = d_t = \frac{b}{2}$

$\therefore$ Our limiting condition becomes $x = \frac{b^2}{12} \times \frac{2}{b} = \frac{b}{6}$

$\therefore$ E may lie anywhere between points F and G, whose distance apart $= \frac{b}{3}$. FG is called *the Middle Third of the cross section.* Therefore E must lie within the middle third. This is called the **Law of the Middle Third.**

Digitized by Google

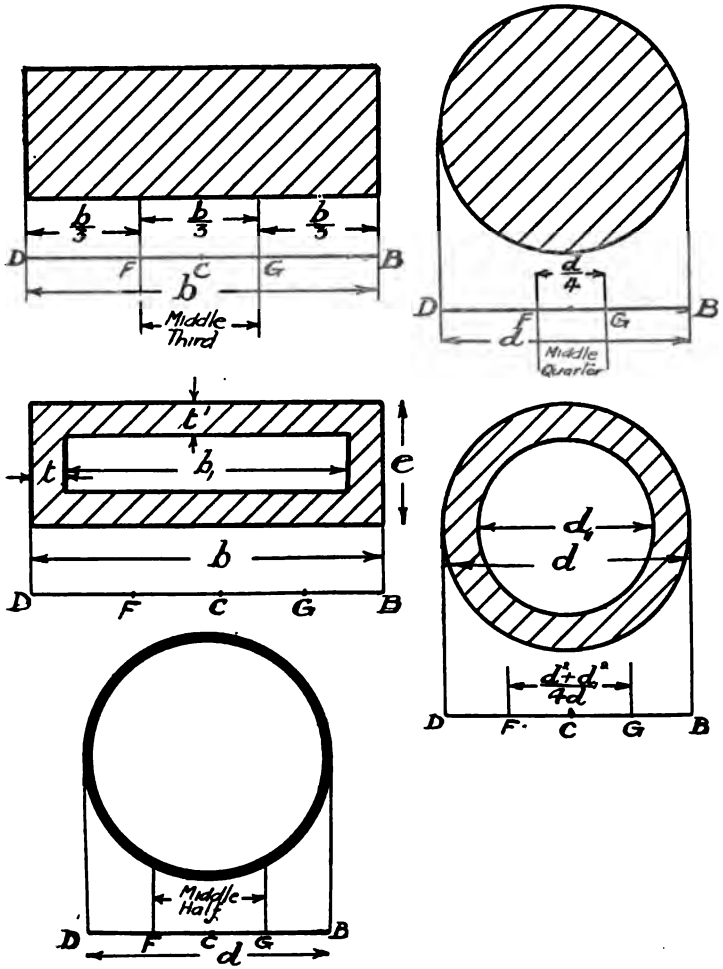

Fig. 174.—Masonry Structures.

Digitized by Google

With regard to this law it must be carefully remembered that it applies to rectangular cross sections, and is not applicable, as sometimes stated, to all masonry structures.

(*b*) ***Solid Circular Cross Section.*** — If d is the diameter of the circle, $k^2 = \frac{d^2}{16}$ and $d_c = d_t = \frac{d}{2}$

$\therefore$ Our limiting condition becomes $x = \frac{d^2}{16} \times \frac{2}{d} = \frac{d}{8}$

$\therefore$ E may lie anywhere between points F and G, whose distance apart $= \frac{d}{4}$. Therefore in this case the line of pressure must lie within the *middle quarter* of the cross section.

(*c*) ***Hollow Rectangular Cross Section.***—Let the cross section be a hollow rectangle of the section shown in the figure, then $k^2 = \frac{e b^3 - (e - 2t')(b - 2t)^3}{12\{e b - (e - 2t')(b - 2t)\}}$ and F G can be found from this.

(*d*) ***Hollow Circular Cross Section.***—Let the cross section be a ring of internal diameter d_1, and external diameter d. Then $k^2 = \frac{(d^4 - d_1^4)}{16(d^2 - d_1^2)} = \frac{d^2 + d_1^2}{16}$

$\therefore$ In this case $x = \frac{d^2 + d_1^2}{16} \times \frac{2}{d} = \frac{d^2 + d_1^2}{8d}$

$$\therefore \text{F G} = \frac{d^2 + d_1^2}{4d} \quad \ldots\ldots\ldots\ldots\ldots\ldots\ldots\ldots\ldots\ldots (4)$$

In the case where the ring is thin, F G approaches the value

$$\frac{2d^2}{4d} = \frac{d}{2}.$$

Therefore, in this case the line of pressure must line within the middle half of the cross section.

CONDITION 2. — If the line of pressure is in the limiting position and the section is symmetrical, so that $d_c = d_t$, the value of f_c from equation (1) becomes equal to $\frac{Q}{A}\left(1 + \frac{x d_t}{k^2}\right)$

$$= \frac{Q}{A}(1 + 1)$$

$$= \frac{2Q}{A} \quad \ldots\ldots\ldots\ldots\ldots\ldots\ldots\ldots\ldots\ldots\ldots (5)$$

Digitized by Google

For rectangular sections $f_c = \frac{Q}{A}\left(1 + \frac{x \cdot \frac{b}{2}}{\frac{b^2}{12}}\right) = \frac{Q}{A}\left(1 + \frac{6x}{b}\right)$...(6)

Therefore the second condition in such a case is that $\frac{2Q}{A}$ is within the safe compressive stress for the material.

CONDITION 3. — If μ is the coefficient of friction for the material, the frictional force $= \mu Q$,

$$\therefore \text{ S must not be } > \mu Q,$$

$$\therefore \frac{S}{Q} \quad ,, \quad ,, \quad > \mu$$

$$i.e., \tan\theta \quad ,, \quad ,, \quad > \mu$$

But if $\tan\phi = \mu$, ϕ is called *the angle of friction.* There our condition now becomes that θ *must not be greater than the angle of friction for masonry on masonry.* This angle varies for different kinds of masonry, but is in the neighbourhood of 30°. Some writers gives 34° to 38°.

In most cases it will be found that if the first condition is satisfied, the second two will be satisfied also.

Cores.—Given any cross section of an elastic material, then there is an area within that cross section such that if the line of pressure falls within such area there will be no tensile stress in the material, but if the line of pressure falls outside such area there will be tensile stress; this area is called the **core of the cross section.**

It can be proved that 'if the neutral axis turns round a point the *load point* runs along a straight line.'

In the case when the load point falls on the edge of the core the stress is zero at the edge of the section, see Fig. 176, and so the neutral axis is at the edge. Now consider the rectangular section K L M N, Fig. 175. When the N.A. is along L M, F is the load point, and when the N.A. is along K L, J is the load point, and, therefore, as the N.A. turns about the point L the load point must move along the line F J. Therefore, for a rectangle the core is a diamond-shaped figure as shown.

For a circle, the core is a circle of diameter $\frac{D}{4}$.

Digitized by Google

For other sections the core can be easily obtained, but the rectangle and the circle are the most common masonry sections which occur in practice.

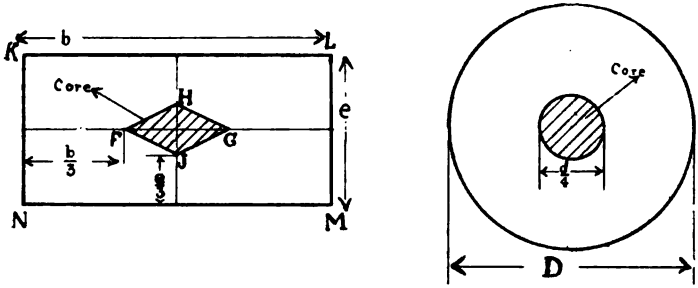

Fig. 175.—*Cores of Sections.*

Distribution of Stress over Cross Section. — The distribution of stress over the cross section of a masonry structure will be as indicated on p. 168, for combined bending and direct stresses.

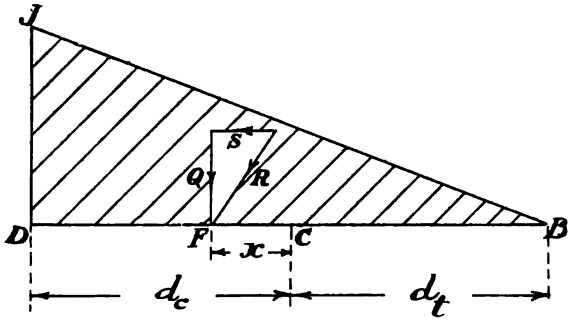

Fig. 176.

In the case in which the line of pressure is in the limiting position so that tension is just about to come on the cross section the distribution of stresses is as shown in Fig. 176.

When, as is common, $d_c = d_t$, D J $= \frac{2\,Q}{A}$

Digitized by Google

Difficulties of Theory of Masonry Structures.—In considering the stability of masonry structures according to the first condition as to there being no tensile stress, it must be remembered that the rule of the middle third for rectangular sections, and the corresponding rules for other sections, are based on the assumption that masonry is an elastic material, although, as a matter of fact, this assumption is not really justified. It is, therefore, not surprising to find many writers stating that these laws are unsatisfactory; they are generally alleged to err on the safe side, and some authorities state that in rectangular sections the line of pressure may safely lie within the *middle half*. There are, however, other difficulties even if the material were elastic, which occur in such structures as dams. These difficulties lie chiefly from the fact that secondary stresses due to shear—which are comparatively negligible in the case of beams whose length is great compared with their depth—are quite appreciable in these structures. A considerable amount of investigation has been carried out recently on this point, and we will refer to this point again in dealing with dams. It is to be hoped that within a few years some exhaustive experimental work may be done on the subject of masonry structures. For the present, we must be guided by the rules which we have formulated above.

Wray's Rule for Uncemented Blocks.—In the case where blocks merely rest on each other, Wray's rule is to take the maximum intensity of pressure as equal to twice the normal component of the thrust divided by three times the distance from the load point to the nearest edge, provided such distance be not greater than one-third the base. Then such intensity must be within the safe pressure for the material.

MASONRY DAMS.

The stability of masonry dams or retaining walls for water can be determined by the above-mentioned rules. Consider first the case of a dam with a vertical face and a straight slope or *batter* for the back.

Let A B C D, Fig. 177, be the section of a dam. The c[illegible] G is found by the construction given on p. 87, *i.e.*, by joi[illegible]

Digitized by Google

mid points of A C and B D, and making C H = B D, B K = A C, and joining across.

Now consider the stability *per foot length* of the dam.

The weight of the dam = $W = \frac{w(AC + BD) \cdot AB}{2}$, where w is the weight per cubic foot of the material. When the reservoir is empty the line of pressure cuts the base in the load point L, and the distribution of the stresses on the base is as shown on the figure, where

$$Be = \frac{W}{A}\left(1 + \frac{6\,LF}{BD}\right)$$

$$Df = \frac{W}{A}\left(1 - \frac{6\,LF}{BD}\right)$$

Now consider the case when the reservoir is full, the height of water being H.

Then the total pressure per ft. length of the dam = P = area of wetted surface × pressure at depth of centroid

$$= H \times \frac{\rho H}{2} = \frac{\rho H^2}{2}$$

where ρ = wt. per cub. ft. of water = 62·4 lb. about.

This pressure in a dam is at right angles to the face, and acts at the centre of pressure O, *i.e.*, at distance $\frac{H}{3}$ from B. This can be seen clearly from the figure, where N Q B represents the pressures at various depths and B Q = ρ H; then resultant pressure P = area of Δ B N Q = $\frac{\rho H \cdot H}{2} = \frac{\rho H^2}{2}$ and acts at the centroid of the Δ, *i.e.*, at distance $\frac{H}{3}$ from B.

Produce P to meet the line of action of the weight—*i.e.*, the vertical through G—in the point *a*, and to some convenient scale draw *a b* vertically = W and *b c* horizontally = P; then if *a c* cuts B D in M, M is the load point in which the line of pressure cuts the base when the reservoir is full. As the water in the reservoir

e line of pressure gradually moves from the point L to the

Whe Then M must lie within the middle third.

Digitized by Google

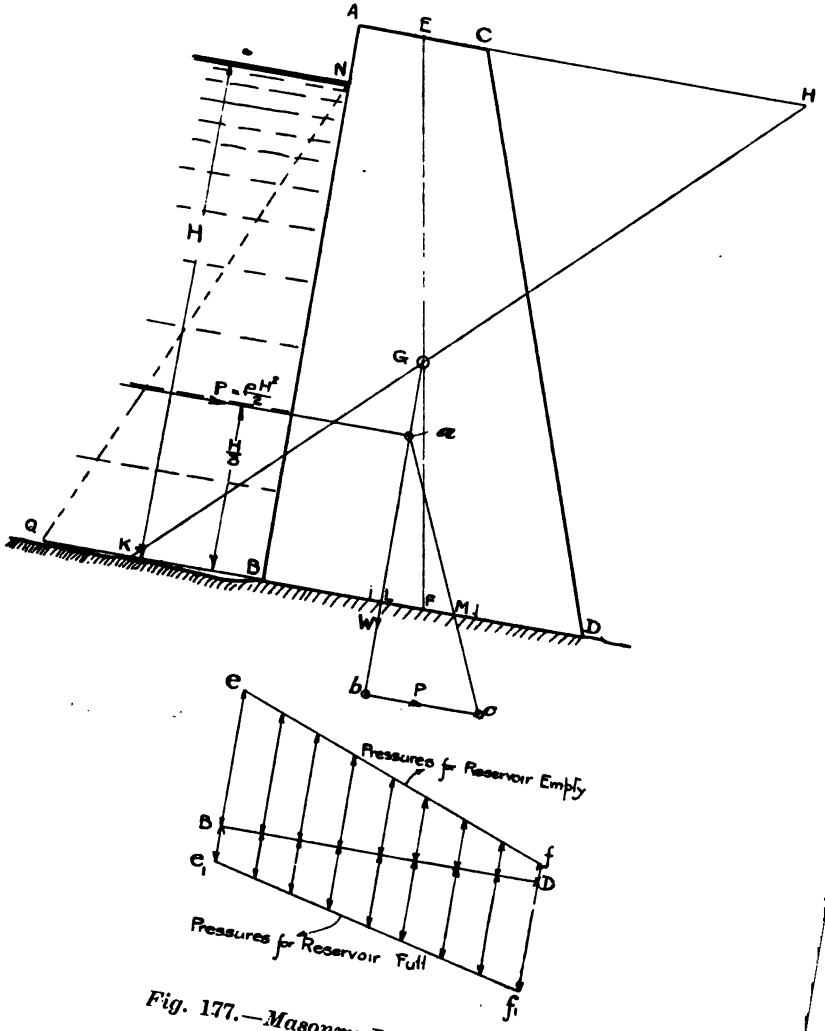

Fig. 177.—Masonry Dams.

Digitized by Google

When the reservoir is full, the distribution of the stresses on the base is as shown on the figure, where

$$B e_1 = \frac{W}{A}\left(1 - \frac{6\,F\,M}{B\,D}\right)$$

$$B f_1 = \frac{W}{A}\left(1 + \frac{6\,F\,M}{B\,D}\right)$$

NOTE.—In this case *a* M is not strictly the line of pressure for the dam. It is really the tangent to the line of pressure at the point M, and it determines the stresses on the base, which is the weakest section. If we required the stresses over any other section, we should have to go through a similar construction for such section treated as the base. We will show in the next example how the whole line of pressure can be drawn.

Dam with Curved Flank.—If a dam has a curved flank and a straight or curved face, the line of pressure can be drawn as follows: Consider the dam shown in Fig. 178. Make a number of horizontal sections 1, 1; 2, 2 . . . . 5, 5, and find the centroids G_1, G_2 . . . . G_5 of each of the sections by the construction already given. Consider, as before, the stability of a slice cut out of the dam, a foot or other unit distance in length in a direction at right angles to the plane of the paper. Now find the resultant water pressures P_1, P_2 . . . . P_5 on the portion of the dam above each of the given sections when the reservoir is full: for instance, P_4 is the resultant water pressure on the portion of the dam above the line 4, 4, and acts at two-thirds of the depth of the line 4, 4, and is at right angles to the face of the dam. If the face of the dam is appreciably curved, the resultant pressures must be found from the pressures on the separate portions by means of a link and vector polygon construction. We now require the centroid of the section of the dam above each section, and may proceed as follows: Draw verticals through each of the centroids G_1, G_2, &c., and on a vertical vector line set out lengths o, 1; 1, 2 . . . . 4, 5, to represent the weights of each of the sections; then take any pole o and draw a link polygon *a*, *b*, *c*, *d*, *e*, *f*, the first and last links meeting in *a*. Then produce each link back to meet *a b*, *f e* meeting it in *f* and so on. Through *a* draw a vertical to cut 5, 5 in L_5, through *f* draw a vertical to cut 4, 4 in L_4 and so on,

Digitized by Google

then joining up the points L_5, L_4, &c., we get the *line of pressure for the reservoir empty* as shown. Through points such as L_5, L_4, &c., draw verticals to meet the water pressures P_5, P_4, &c., in F_5, F_4, &c. Then combining P_5 with the total weight of the

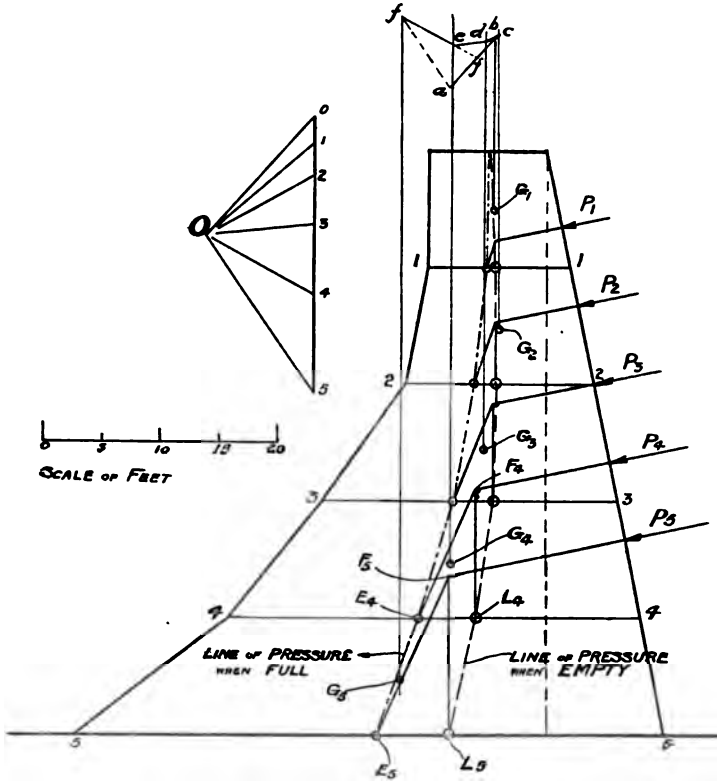

Fig. 178.—*Dam with Curved Back.*

dam above 5, 5 as shown in the preceding example and drawing F_5 E_5 parallel to the resultant thrust, we get the load point E_5. Similarly, E_4 is obtained by combining P_4 with the total weight above 4, 4, and drawing a parallel through F_4 and so on, and by joining up the points F_5, F_4, &c., we get the *line of pressure when*

Digitized by Google

full. The distribution of stress over any section is obtained as previously explained. It will be seen that in the above example the lines of pressure lie well within the middle third, the worst section being 2, 2.

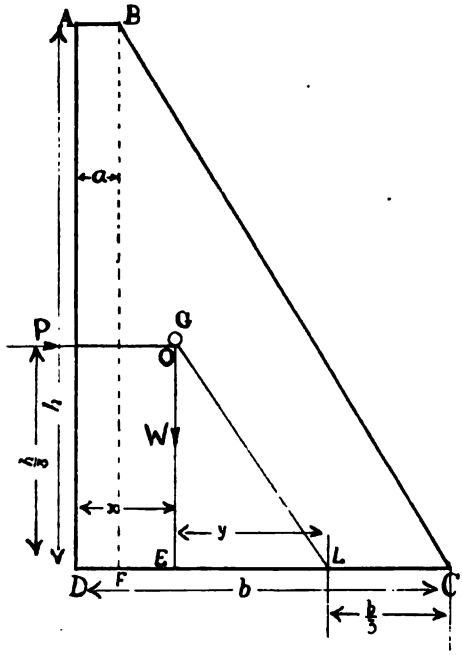

Fig. 179.—*Trapezoidal Dam.*

In the figure many lines have been omitted to prevent the confusion which would otherwise occur when reduced to so small a scale. The student should work such an example to a large scale to obtain familiarity with the method.

Calculation for Width of Base of Trapezoidal Dam. —Let A B C D, Fig. 179, be a section of a trapezoidal dam with a vertical face, and let A B be of length a and C D of length b, the height of the dam being h. We require to find the value of b to just keep the line of pressure O L within the middle third of the section.

Digitized by Google

We first require the position of E, the point where the vertical through G the centroid of the section cuts the base ; let this be at distance x from D. Then we have, dividing the section up into a rectangle and taking moments round D,

$$x\left(\frac{a+b}{2}\right)h = ha \cdot \frac{a}{2} + \frac{1}{2}h(b-a)\left\{a + \frac{1}{3}(b-a)\right\}$$

$$= \frac{h}{2}\left\{a^2 + \frac{(b-a)(b+2a)}{3}\right\}$$

$$= \frac{h}{6}\left\{b^2 + ab + a^2\right\}$$

$$\therefore x = \frac{a^2 + ab + b^2}{3(a+b)} \quad \ldots\ldots(1)$$

Now if the weight per cubic foot of the masonry and water are w and ρ respectively,

Total water pressure per foot $= P = \frac{\rho h^2}{2}$

„ weight of masonry „ $= W = \frac{w(a+b)h}{2}$

Now $\frac{EL}{OE} = \frac{P}{W} = \frac{\rho h}{w(a+b)}$

$$\therefore \frac{y}{\frac{h}{3}} = \frac{\rho h}{w(a+b)}$$

$$y = \frac{\rho h^2}{3w(a+b)} \quad \ldots\ldots(2)$$

Then if the line of pressure is to lie within the middle third, we have :

$$x + y = \frac{2b}{3} \quad \ldots\ldots(3)$$

i.e., $\frac{a^2 + ab + b^2}{3a + b} + \frac{3\rho h 2}{3w(a+b)} = \frac{2b}{3}$

$$a^2 + ab + b^2 + \frac{\rho h^2}{w} = 2b(a+b)$$

$$a^2 + ab + b^2 + \frac{\rho h^2}{w} = 2ab + 2b^2$$

$$\therefore b^2 + ab - a^2 - \frac{\rho h^2}{w} = 0 \quad \ldots\ldots(4)$$

When a, h, ρ, and w are given, b can be found by the above quadratic equation.

Digitized by Google

TRIANGULAR SECTION.—If the dam is of triangular cross section $a = 0$,

$$\therefore \text{ we get } b = h\sqrt{\frac{\rho}{w}}$$

RECTANGULAR SECTION.—In this case $a = b$,

$$\therefore b = h\sqrt{\frac{\rho}{w}}$$

NUMERICAL EXAMPLE.—*A masonry dam of trapezoidal section is 25 ft. high and 4 ft. thick at the top. If the masonry weighs 144 lb. per cub. ft., find the necessary width of the base to avoid tensile stresses. What is then the maximum compressive stress?*

Putting these values in equation (4) we have—

$$b^2 + 4b - 16 - \frac{62{\cdot}4 \times 625}{144} = 0$$

$$b^2 + 4b - 2708 = 0$$

$$b = \frac{-4 + \sqrt{16 + 1083}}{2}$$

$$= \frac{-4 + 34{\cdot}62}{2}$$

$$= \underline{15{\cdot}31 \text{ ft.}}$$

Then the max. compressive strength $= \frac{2W}{15{\cdot}31}$

$$= \frac{2 \times 25 \times 9{\cdot}65}{15{\cdot}31} \times \frac{144}{2240} \text{ tons per sq. ft.}$$

$$= \underline{2{\cdot}25 \text{ tons per sq. ft. nearly.}}$$

Recent Developments of Theory of Dams.—In a paper on *Some Disregarded Points in the Stability of Masonry Dams*,* Mr. L. W. Atcherley and Prof. Karl Pearson, F.R.S., pointed out that the stability of vertical sections as well as of the horizontal sections should be considered.

Let A B C D, Fig. 180, be the section of a dam, and let B E F C represent the stresses on the base when the reservoir is full, this being obtained as previously explained. Now consider a vertical section K J of the dam. The forces acting on it are as follows:

(*a*) An upward pressure denoted by the area C F M J.

* Dulau & Co., London, 1904.

Digitized by Google

(*b*) A downward pressure due to the weight of the portion C K J of the dam.

(*c*) A shearing force S at the base of the dam.

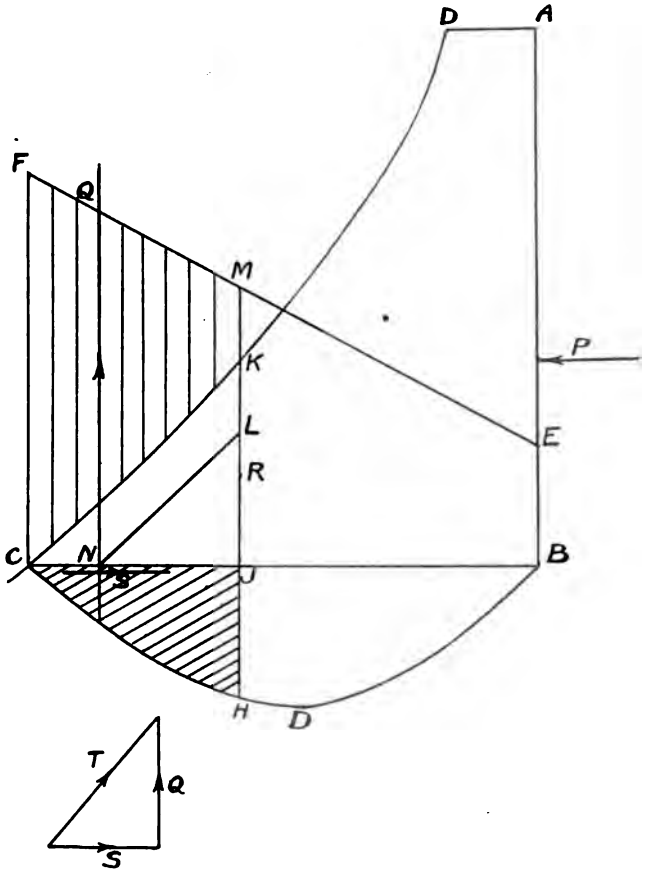

Fig. 180.—*Stresses on Vertical Sections of Dams.*

Now let the diagram, B E F C be drawn in terms of feet of masonry, *i.e.*, one inch in vertical height represents the weight of one square inch of the section; or if the linear scale is 1″ = *x* ft.

Digitized by Google

and one cub. ft. of masonry weighs w lb., 1″ on C F represents $w x^2$ lb. per sq. ft.

Then C K J represents the weight of the portion C K J of the dam, so that the difference C F M L represents the resultant upward pressure on K L. Let this area be Q lb., and let its centroid cut the base in N, then Q × N J is the bending moment about the centroid R of the section K J.

To obtain the value of the shearing force we must assume a law for the distribution of the shear. As a first approximation take this as a parabola C D B, the area being the total shear, *i.e.*, the water pressure P. Then S is the area C J H of the shear curve, and its moment about the centroid is S × J R.

We can combine S and Q, thus obtaining the resultant T; then drawing N L parallel to T we get L the load point for the vertical section K J, and if L falls outside the middle third, there will be a tensile stress at J.

There has been some considerable controversy as to the form of shear curve to adopt, and some exhaustive experiments have been made by Professor Pearson and Mr. A. F. Pollard with a view to determining such form. These experiments are described in a paper, *An Experimental Study of the Stresses in Masonry Dams.** Some interesting articles and letters on the subject are to be found in *Engineering*, vols. 79, 80.

Considerable interest in this question was taken by the late Sir Benjamin Baker, and his regretted death prevented a very valuable opinion being given on the experimental investigations.

Practical Rules for Masonry Dams. — Molesworth formulæ :

High Dams.—Let P be the safe pressure in tons per sq. ft. on the masonry.

Let x be the depth in ft. of a given point from the top; y the horizontal distance in ft. from such point to flank of dam; and z the horizontal distance in ft. from such point to face of dam.

$$\text{Then} \quad y = \sqrt{\frac{\cdot 05\, x^3}{P + \cdot 03\, x}}$$

$$z = \left(\frac{\cdot 09\, x}{P}\right)^4$$

* Dulau & Co., London, 1907.

Digitized by Google

Low Dams.—Width at bottom = ·7 × height.
„ „ middle = ·5 × height.
„ „ top = ·3 × height.

RETAINING WALLS FOR EARTH PRESSURE.

In addition to the difficulties of satisfactory theoretical treatment of the retaining wall itself, as pointed out with respect to dams, we have in the design of retaining walls for earth pressure the additional difficulty of determining the magnitude, direction and point of action of the resultant pressure due to the earth. As soon as we have found this resultant pressure P in magnitude, direction and position, we proceed exactly as in the case of the

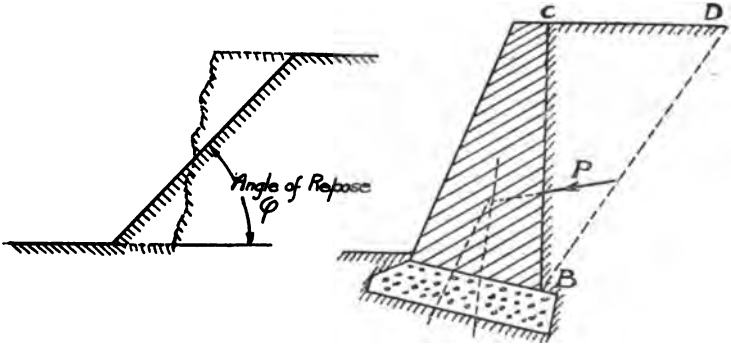

Fig. 181.—*Stability of Earthwork.*

dams, viz., we produce the line of action of the pressure P to meet the vertical through the centroid of the wall, and find the resultant of P and the weight W of the wall, and then determine the load point at which the line of pressure cuts the base.

We will deal with three theories of earth pressure, viz., (1) Rankine Theory, (2) Wedge Theory, (3) Scheffler Theory.

In all these theories we will assume that the pressure at any point is proportional to the depth, so that the resultant pressure acts, as in the case of water, at one-third of the height from the base.

Angle of Repose.—If a bank of earth be left to itself it will crumble down under the action of the weather until it has taken up a certain slope, as indicated in Fig. 181. The angle of incli-

Digitized by Google

nation at which such crumbling ceases is called the *angle of repose*, and depends on the nature of the earth and on its wetness.

When a wall is placed so as to prevent this crumbling, there will be a pressure P due to a portion such as the wedge C B D which would fall down if the wall were removed. As pointed out above, the chief difficulty consists in determining this pressure P.

The angle of repose of earth corresponds to the angle of friction of materials generally. Thus we may say that the angle of repose for masonry on masonry is about 30 degrees.

ANGLE OF REPOSE AND WEIGHTS OF VARIOUS SUBSTANCES.

Substance	Angle of Repose ϕ degrees	Weight in lb. per cub. ft.
Sand, fine dry	31 to 37	89 to 118
,, wet	26	
Vegetable earth, dry	29	100 to 120
,, moist	45 to 49	
,, very wet	17	
Clay, dry	29	120 to 135
,, damp	45	
,, wet	16	
Gravel, clean	48	90 to 110
,, with sand	26	
Shingle	39	

Rankine's Theory of Earth Pressure.—In this theory of earth pressure, the earth is treated in the same way as elastic solids in a state of strain.

Let the principal stresses (see p. 14) on a cube of earth under a state of strain at a given point be p and q, Fig. 182. Then the earth tends to slip along any plane through the point except the planes of principal stress, and the tendency will be greatest on the plane on which the resultant stress is most oblique, and if such

Digitized by Google

obliquity becomes equal to ϕ, slipping will occur. On p. 16 we proved that the stresses on a plane inclined at θ to the stress p are

f_n = normal component = $p \sin^2 \theta + q \cos^2 \theta$ .....(1)

f_t = tangential component = $(p - q) \sin \theta \cos \theta$ .....(2)

Then, if β is the angle of the resultant stress to the normal

$$\cot \beta = \frac{f_n}{f_t} = \frac{p \sin^2 \theta + q \cos^2 \theta}{(p - q) \cos \theta \sin \theta} = \frac{p \tan^2 \theta + q}{(p - q) \tan \theta}$$

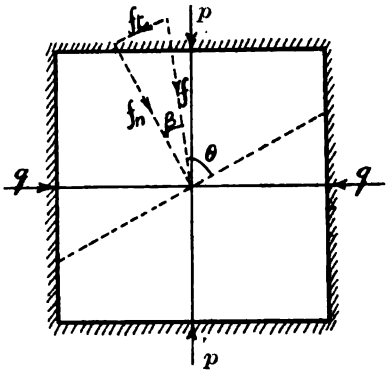

Fig. 182.—*Rankine's Theory of Earth Pressure.*

This is a maximum when $\frac{d \cot \beta}{d \theta} = 0$.

i.e., $(p - q) \tan \theta \cdot 2p \tan \theta \sec^2 \theta - (p - q) \sec^2 \theta (p \tan^2 \theta + q) = 0$

i.e., $(p - q) \sec^2 \theta (2p \tan^2 \theta - p \tan^2 \theta - q) = 0$

i.e., $\tan^2 \theta = \frac{q}{p}$

$$\therefore \cot \beta = \frac{q + q}{(p - q) \sqrt{\frac{q}{p}}}$$

$$\cot^2 \beta = \left(\frac{4q^2}{(p - q)^2 \cdot \frac{q}{p}}\right) = \frac{4pq}{(p - q)^2}$$

i.e., $\frac{\cos^2 \beta}{\sin^2 \beta} = \frac{1 - \sin^2 \beta}{\sin^2 \beta} = \frac{4pq}{(p - q)^2}$

$$\therefore \frac{1}{\sin^2 \beta} = \frac{(p - q)^2 + 4pq}{(p - q)^2} = \frac{(p + q)^2}{(p - q)^2}$$

$$\therefore \sin \beta = \frac{(p - q)}{(p + q)} \quad \text{.....(3)}$$

Digitized by Google

As β increases the limit will occur when $\beta = \phi$

$$i.e., \sin \phi = \frac{p-q}{p+q}$$

$$\text{or } \frac{q}{p} = \frac{1 - \sin \phi}{1 + \sin \phi} \quad \ldots\ldots\ldots\ldots\ldots\ldots\ldots\ldots\ldots\ldots (4)$$

That is, the ratio of the lesser principal stress to the greater cannot be less than $\frac{1 - \sin \phi}{1 + \sin \phi}$

When the horizontal principal stress is the least possible, the earth is on the point of sliding downwards, but when the horizontal principal stress is the greatest possible, the earth is on the point of heaving up.

CASE 1. RETAINING WALL WITH VERTICAL BACK, EARTH HORIZONTAL.—In this case, if we consider a piece of earth at depth x from the surface, we have $p = w_e x$, w_e being the weight per cubic foot of earth, Fig. 183.

$\therefore$ Least horizontal thrust to maintain equilibrium

$$= q = w_e x \frac{(1 - \sin \phi)}{1 + \sin \phi}$$

We see, therefore, that A B C gives the variation of horizontal thrust

$$\text{where A C} = \frac{w_e h (1 - \sin \phi)}{1 + \sin \phi}$$

$$\therefore \text{ Total pressure P} = \text{area of A B C} = \frac{w_e h^2}{2} \left(\frac{1 - \sin \phi}{1 + \sin \phi} \right)$$

$$\text{If } \phi = 30^\circ, \text{ P} = \frac{w_e h^2}{6}$$

GRAPHICAL CONSTRUCTION FOR P.—Draw A E at angle ϕ to vertical to meet horizontal through B in E, and with centre E and radius E B describe an arc E F.

$$\text{Then P} = \tfrac{1}{2} w_e \cdot \text{A F}^2$$

$$\text{Because A F}^2 = (\text{A E} - \text{E F})^2 = (\text{A E} - \text{E B})^2 = \left\{ \left(\frac{h}{\cos \phi} \right) - (h \tan \phi) \right\}^2$$

$$= h^2 \left(\frac{1 - \sin \phi}{\cos \phi} \right) = \frac{h^2 (1 - \sin \phi)^2}{\cos^2 \phi}$$

$$= \frac{h^2 (1 - \sin \phi)^2}{(1 - \sin^2 \phi)} = \frac{h^2 (1 - \sin \phi)}{1 + \sin \phi}$$

Digitized by Google

We then produce P to meet the vertical through the centroid G in a and take $a\,b$ = W = weight of wall per foot length, and $b\,c$ = P, then if $a\,c$ cuts the base in the load point L, this should be within the middle third.

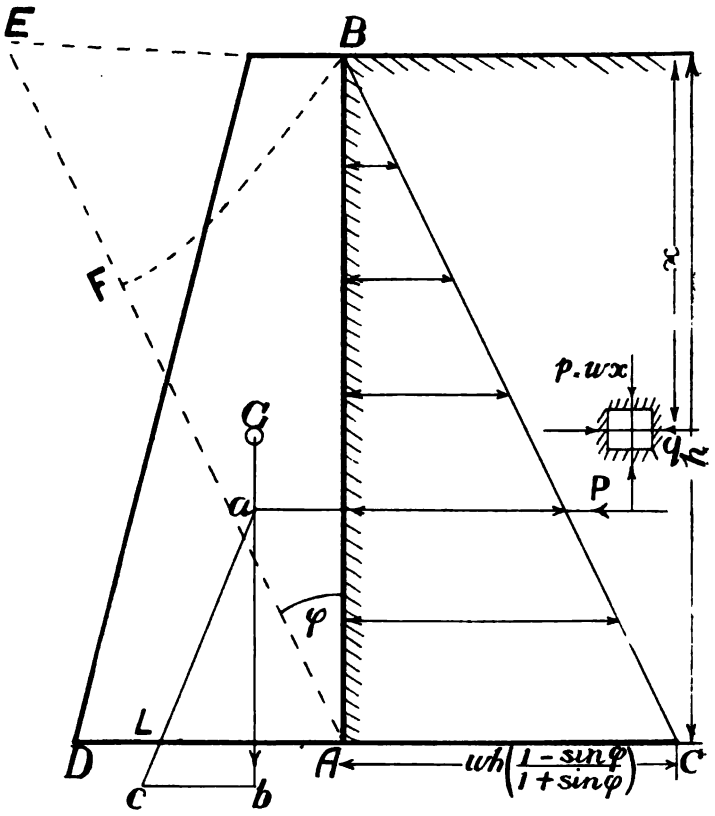

Fig. 183.—*Rankine's Theory for Retaining Wall with Vertical Back.*

* Case 2. Retaining Wall with Sloping Back, Earth Horizontal.—In this case, if the slope of the wall is θ, Fig. 184, we have to find from the principal stresses the resultant stress at

Digitized by Google

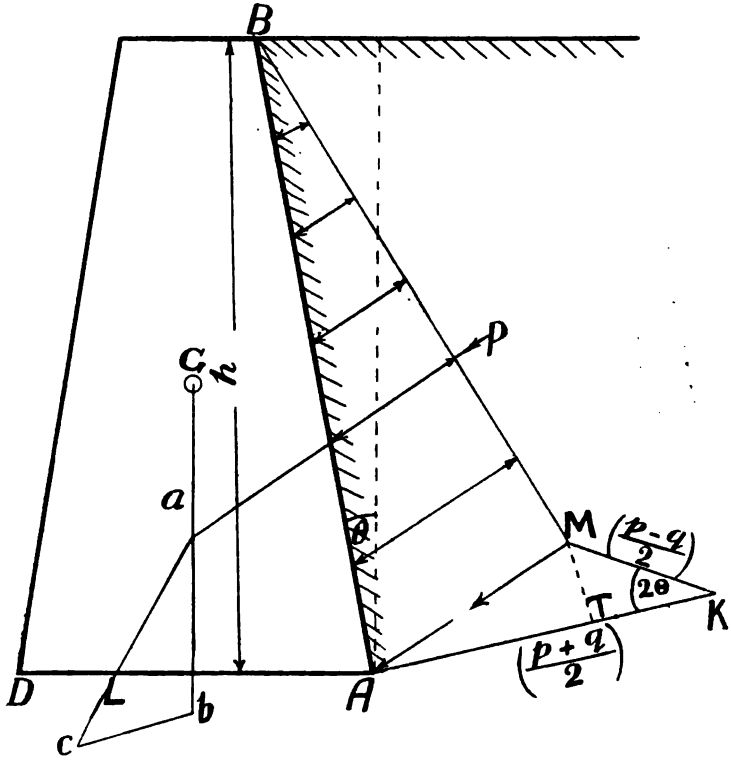

Fig. 184.—*Rankine's Theory for Retaining Wall with Sloping Back.*

any point. This can either be found by the equation (3), p. 16, or graphically as follows:—

Draw A K at right angles to A B, and make it equal to $\frac{p+q}{2}$ and draw K M at an angle 2θ to A K, making it equal to $\frac{p-q}{2}$ then A M is the resultant stress, and the area of the triangle B A M gives the resultant pressure. For drop M T perpendicular to A K, then $M T = M K \sin 2\theta = (p - q) \sin \theta \cos \theta = f_t$

$$A T = A K - T K = \frac{p+q}{2} - \frac{(p-q)}{2} \cos 2\theta$$

Digitized by Google

$$= \frac{1}{2}\left\{(p + q)(\sin^2\theta + \cos^2\theta) - (p - q)(\cos^2\theta - \sin^2\theta\right\}$$

$$= \frac{1}{2}\left\{2p\sin^2\theta + 2q\cos^2\theta\right\} = p\sin^2\theta + q\cos^2\theta = f_n$$

$$\therefore \text{A M} = \sqrt{\text{A T}^2 + \text{M T}^2}$$

$$= \sqrt{f_n^2 + f_t^2}$$

$$= f$$

As before, $p = w_e h$

$$q = w_e h \frac{(1 - \sin\phi)}{(1 + \sin\phi)}$$

*Case 3. Surcharged Wall.—When the earth slopes upward from the wall, the wall is said to be *surcharged*. The inclination of the earth can obviously be not greater than the angle of repose.

Now consider the equilibrium of a small parallelopiped Q R S T. Fig. 185, of the earth. The pressures f on the forces Q R and S T are vertical and parallel to the faces Q T and R S. Therefore the resultant stresses f_1 on the faces Q T and S R must be parallel to the faces Q R, S T. The stresses f and f_1 are then said to be conjugate. We now require to find the principal stresses p and q corresponding to f and f_1. Suppose f and f_1 are known and set out equal to X U and X Y along a line at inclination α to X Z, and let U Y be bisected at V, and V Z be drawn perpendicular to X Z. Then Z U and Z Y are joined, it follows from considering the construction proved for Fig. 184 that

$$\text{X Z} = \frac{p + q}{2}$$

$$\text{U Z} - \text{Z Y} = \frac{p - q}{2}$$

$$\text{Now X Z} = \frac{p + q}{2} = \frac{f + f_1}{2} \times \frac{1}{\cos\alpha} \quad \ldots\ldots\ldots\ldots (1)$$

$$\text{Z Y}^2 = \text{Z V}^2 + \text{V Y}^2 = (\text{X Z}^2 - \text{X Y}^2) + \text{V Y}^2$$

$$= \text{X Z}^2 - \left\{\left(\frac{f + f_1}{2}\right)^2 - \left(\frac{f - f_1}{2}\right)^2\right\}$$

$$= \text{X Z}^2 - ff_1$$

$$= \left(\frac{f + f_1}{2\cos\alpha}\right)^2 - ff_1$$

$$\therefore \frac{p - q}{2} = \text{Z Y} = \sqrt{\left(\frac{f + f_1}{2\cos\alpha}\right)^2 - ff_1} \quad \ldots\ldots\ldots (2)$$

Digitized by Google

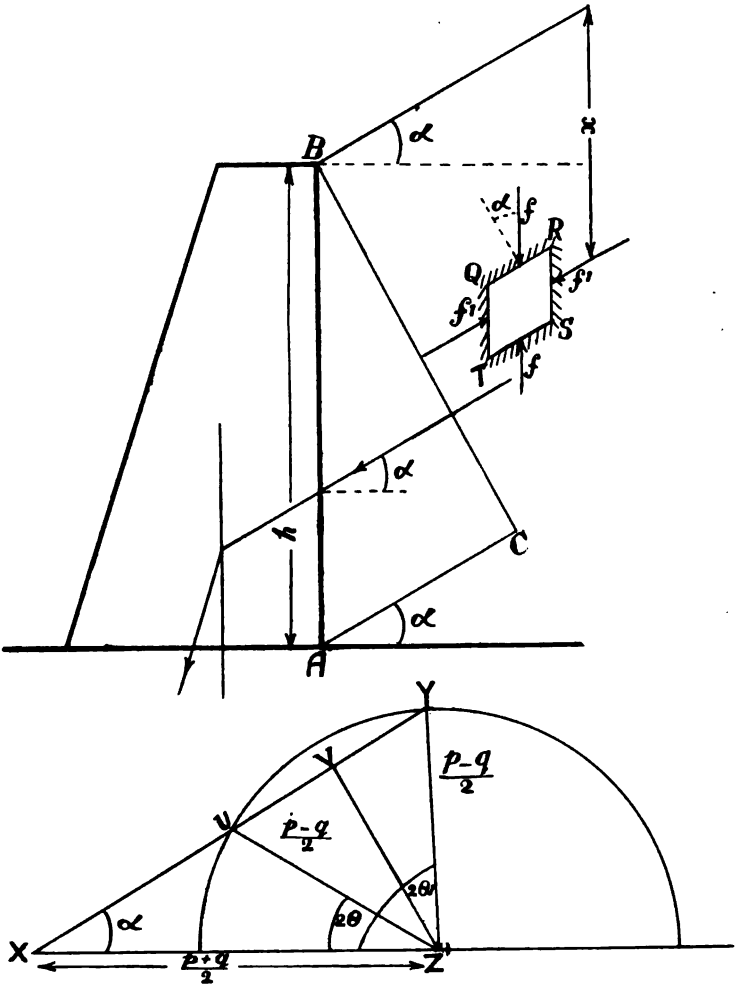

Fig. 185.—*Rankine's Theory for Surcharged Retaining Wall.*

Digitized by Google

Squaring (2) and (1) and dividing we have

$$\frac{\left(\frac{f+f_1}{2\cos\alpha}\right)^2 - ff_1}{\left(\frac{f+f_1}{2\cos\alpha}\right)^2} = \left(\frac{p-q}{p+q}\right)^2$$

$$i.e.,\ 1 - \frac{4ff_1\cos^2\alpha}{(f+f_1)^2} = \left(\frac{p-q}{p+q}\right)^2 \quad \ldots\ldots (3)$$

As we have previously shown $\left(\frac{p-q}{p+q}\right) = \sin\phi$

$$\therefore \frac{4ff_1\cos^2\alpha}{(f+f_1)^2} = 1 - \sin^2\phi = \cos^2\phi$$

$$(f+f_1)^2 = \frac{4ff_1\cos^2\alpha}{\cos^2\phi} \quad \ldots\ldots (4)$$

again, $4ff_1 = 4ff_1$

$\therefore$ Subtracting

$$(f-f_1)^2 = 4ff_1\left(\frac{\cos^2\alpha}{\cos\phi} - 1\right) \quad \ldots\ldots (5)$$

$$\therefore \left(\frac{f-f_1}{f+f_1}\right)^2 = \frac{\cos^2\alpha - \cos^2\phi}{\cos^2\alpha}$$

$$\therefore \frac{f-f_1}{f+f_1} = \sqrt{\frac{\cos^2\alpha - \cos^2\phi}{\cos^2\alpha}} \quad \ldots\ldots (6)$$

$$\frac{f}{f_1} = \frac{\cos\alpha \pm \sqrt{\cos^2\alpha - \cos^2\phi}}{\cos\alpha \mp \sqrt{\cos^2\alpha - \cos^2\phi}}$$

$$\therefore \frac{f_1}{f} = \frac{\cos\alpha - \sqrt{\cos^2\alpha - \cos^2\phi}}{\cos\alpha + \sqrt{\cos^2\alpha - \cos^2\phi}} \ldots (7)$$

The signs being taken thus to give the least value of f_1.

When $\alpha = \phi$, $f = f_1$ ..... (8)

Now $f = w_e x \cos\alpha$, since the area of the face Q R is increased.

$\therefore$ Pressure at base $= w_e x \cos\alpha \cdot \frac{\cos\alpha - \sqrt{\cos^2\alpha - \cos^2\phi}}{\cos\alpha + \sqrt{\cos^2\alpha - \cos^2\phi}} =$ A C

$\therefore$ Resultant pressure = P = area of Δ B A C

$$= \frac{w_e h^2}{2}\cos\alpha \cdot \left\{\frac{\cos\alpha - \sqrt{\cos^2\alpha - \cos^2\phi}}{\cos\alpha + \sqrt{\cos^2\alpha - \cos^2\phi}}\right\} \ldots (9)$$

The stability is then found as in previous cases.

When the wall is not vertical, the stress is found as shown

Digitized by Google

graphically for Fig. 184, but θ will not be the angle with the vertical but with the direction of p, which will be inclined to the vertical at $45° - \frac{\varphi}{2}$ when $\alpha = \phi$.

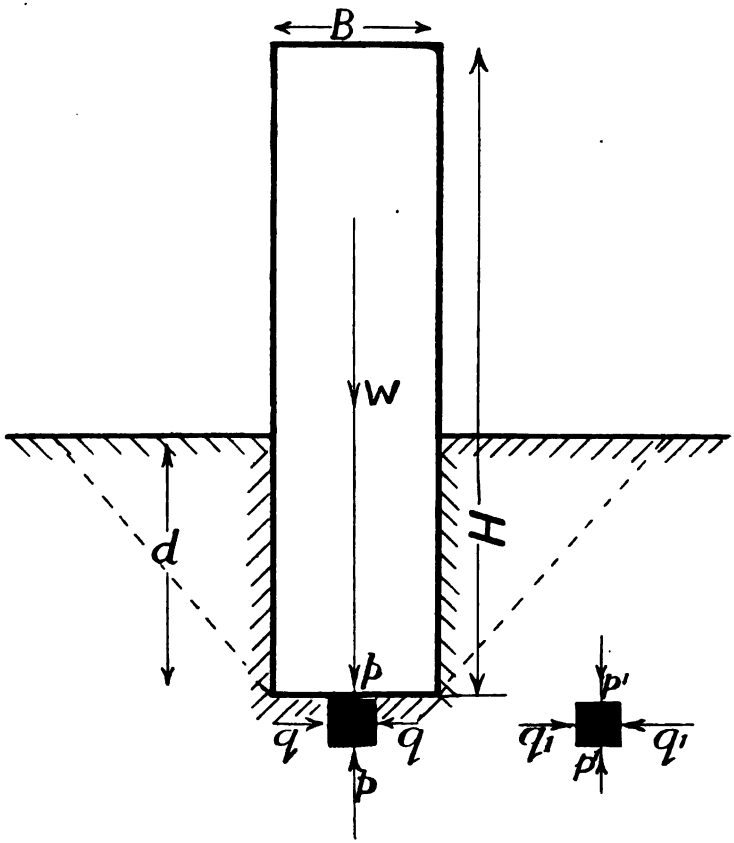

Fig. 186.—*Rankine's Theory for Depth of Foundations.*

*** Minimum Depth of Foundation on Rankine Theory.**—Suppose that the wall has just stopped subsiding, then the earth on each side is on the point of heaving up, Fig. 186.

$$\therefore \text{ Just below wall } \frac{q}{p} = \text{least possible value} = \frac{1 - \sin \phi}{1 + \sin \varphi}$$

Digitized by Google

At the same depth at the side $\frac{q_1}{p_1}$ has the greatest possible value since heaving up is about to occur, since in this case the horizontal stress is the greater.

$$\therefore \frac{q_1}{p_1} = \frac{1 + \sin \phi}{1 - \sin \phi}$$

And q_1 must equal q.

$$\therefore \frac{q_1}{p_1} \div \frac{q}{p} = \frac{p}{p_1} = \left(\frac{1 + \sin \phi}{1 - \sin \phi}\right)^2$$

Now $$p = \frac{\text{weight of wall}}{\text{area of wall}} = \frac{W}{B},$$

taking the stability as before per foot in direction perpendicular to the plane of the paper.

$$p_1 = \text{pressure due to column of earth of height } d$$
$$= w_e d$$
$$\therefore \frac{W}{w_e b d} = \left(\frac{1 + \sin \phi}{1 - \sin \phi}\right)^2$$
$$d = \frac{W}{w_e b}\left(\frac{1 - \sin \phi}{1 + \sin \phi}\right)^2$$

NUMERICAL EXAMPLE. — *The weight of a structure which is to be carried on a concrete foundation is* 1200 *tons, including the weight of concrete in the foundation. The area of the base of the concrete foundation is* 300 *square feet. At what depth below the surface of the soil must the base of the foundation be placed, when the weight of earth is* 3000 *lb. per cubic yard and the angle of repose is* 38°? *(B.Sc. Lond. 1907.)*

In this case $\sin \phi = .6157$

$$\therefore \frac{1 - \sin \phi}{1 + \sin \phi} = \frac{.3843}{1.6157}$$
$$w_e = \frac{3000}{27}$$
$$p = \frac{1200}{300} \times 2240 = 4 \times 2240$$
$$\therefore d = \frac{4 \times 2240 \times 27}{3000}\left(\frac{.3843}{1.6157}\right)^2$$
$$= \underline{4.56 \text{ feet.}}$$

WEDGE THEORY OF EARTH PRESSURE.

Experience shows that when a wall fails the earth first slides down some line such as B C, Fig. 187, called the *line of rupture,*

Digitized by Google

and the earth finally crumbles down to the natural slope B D. Thus the wedge A B C is supported and kept in equilibrium under three forces.

(1) A pressure P on the wall—assumed horizontal and acting of two-thirds the depth—the friction on A B being thus neglected.

(2) The weight W of the wedge A B C.

(3) A reaction R_1 inclined at an angle ϕ to the normal.

We now require to find the position of the line of rupture B C to make P a maximum.

It will be seen from the figure that R_1 is at an angle θ to W.

$\therefore$ From the Δ of forces shown on the figure, $P = W \tan \theta$.

Draw B G at $\angle \phi$ to A B to meet D A produced in G, and draw A F and C E perpendicular to B D, and let B D $= b$, C E $= x$, B G $= c$, A F $= a$.

Then if $\angle$ A D B $= \beta$

$$\therefore P = W \tan \theta = w_e \text{ (area of } \Delta \text{ A B C) } \tan \theta$$

$$= \frac{w_e}{2} (a\,b - x\,b) \tan \theta$$

$$= \frac{w_e}{2} b\,(a - x) \cdot \frac{x}{B\,E}$$

$$= \frac{w_e}{2} b\,(a - x) \cdot \frac{x}{(b - x \cot \beta)} \quad \ldots\ldots\ldots\ldots (1)$$

P is a maximum when $\frac{dP}{dx} = 0$

i.e., when $(b - x \cot \beta)\,[a - 2x] - (a\,x - x^2)\,(-\cot \beta) = 0$

i.e., $x^2 \cot \beta - 2\,b\,x + a\,b = 0$ ..... (2)

i.e., $b\,(a - x) = x\,(b - x \cot \beta)$ ..... (3)

Now $x\,(b - x \cot \beta) = x \,.\, B\,E = 2 \times$ area of Δ B C E

$b\,(a - x) = 2$ (area Δ A B D $-$ Δ C B D)

$= 2 \times$ area Δ A B C

$\therefore$ P is a maximum when the Δs B C E and A B C are equal in area.

Then $$P = \frac{w_e}{2} x^2$$

From (2) $$x = \frac{b \pm \sqrt{b^2 - a\,b \cot \beta}}{\cot \beta}$$

Digitized by Google

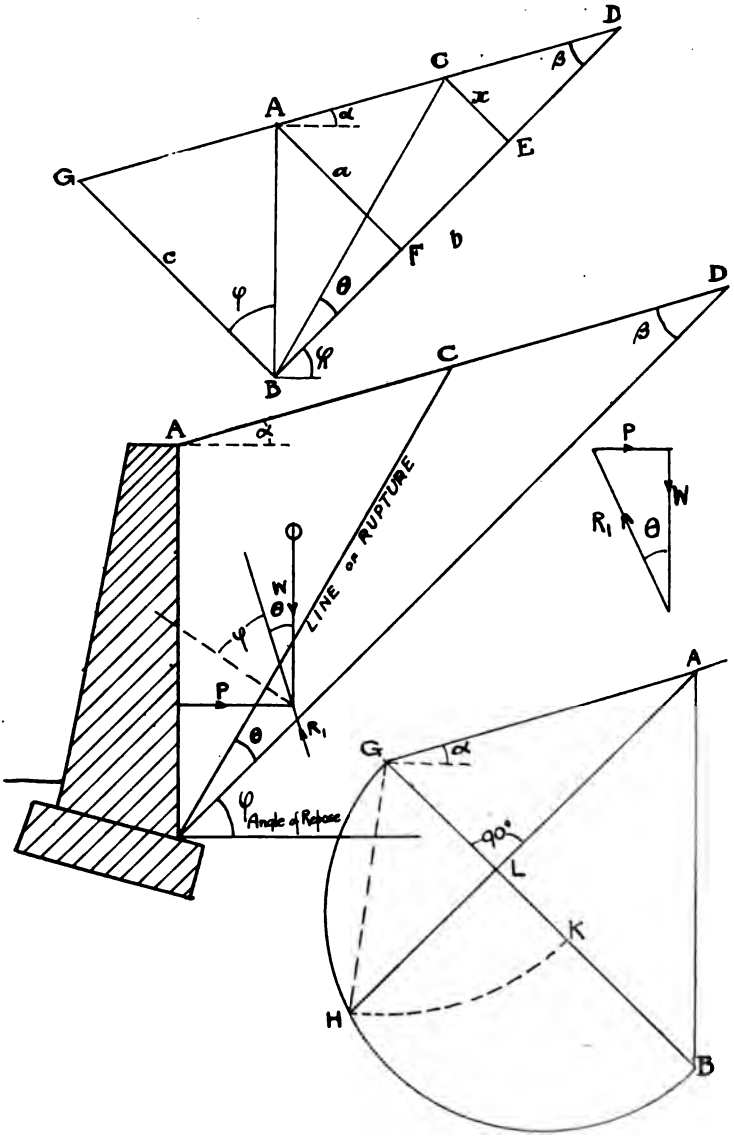

Fig. 187.—Wedge Theory of Earth Pressure.

Digitized by Google

The + sign is inadmissible since $x \cot \beta$ cannot be greater than b

$$\therefore x = \frac{b - \sqrt{b^2 - a b \cot \beta}}{\cot \beta} \quad \ldots\ldots\ldots\ldots (4)$$

$$\text{now } \cot \beta = \frac{b}{c}$$

$$\therefore x = \frac{b - b\sqrt{1 - \frac{a}{c}}}{\frac{b}{c}}$$

$$= c\left\{1 - \sqrt{1 - \frac{a}{c}}\right\}$$

$$= c - \sqrt{c(c-a)} \quad \ldots\ldots\ldots\ldots\ldots (5)$$

$$\therefore P = \frac{w_e}{2}\left\{c - \sqrt{c(c-a)}\right\}^2$$

Graphical Determination of P.—P can be obtained graphically as follows: From the base B draw a line B G at angle ϕ to the vertical, and produce the line of the surface of the earth to meet it in G. Then draw a semicircle B H G on B G, and draw A L perpendicular to B G, and produce it to meet the semicircle on H. With centre G draw an arc H K to meet B G in K.

Then $$P = \frac{w_e}{2} \cdot \text{B K}^2$$

Proof.—Obviously, from the upper portion of the figure, $\text{B L} = a$

$$\therefore \text{G L} = (c - a)$$

From property of semicircle,

$$\text{G H}^2 = \text{B G} \cdot \text{G L} = c(c-a)$$

$$\therefore \text{G K} = \text{G H} = \sqrt{c(c-a)}$$

$$\therefore \text{B K} = c - \sqrt{c(c-a)}$$

$$\therefore \frac{w_e}{2} \cdot \text{B K}^2 = \frac{w_e}{2}\left\{c - \sqrt{c(c-a)}\right\}^2$$

Case when Earth is Horizontal.—When the earth is horizontal $\beta = \phi$.

$$\therefore a = h \sin \text{A B F} = h \cos \phi$$

$$c = \frac{h}{\cos \phi}$$

Digitized by Google

$$\therefore \left\{c - \sqrt{c(c-a)}\right\}^2 = h^2 \left\{\frac{1}{\cos\phi} - \sqrt{\frac{1}{\cos\phi}\left(\frac{1}{\cos\phi} - \cos\phi\right)}\right\}^2$$

$$= \frac{h^2}{\cos\phi^2}\left\{1 - \sqrt{1 - \cos^2\phi}\right\}^2$$

$$= \frac{h^2(1 - \sin\phi)^2}{\cos^2\phi}$$

$$= h^2\frac{(1 - \sin\phi)^2}{(1 - \sin^2\phi)}$$

$$= \frac{h(1 - \sin\phi)}{1 + \sin\phi}$$

$$\therefore P = \frac{w_e h^2}{2} \cdot \frac{1 - \sin\phi}{1 + \sin\phi}$$

This gives the same result as Rankine's theory for earth horizontal and back of wall vertical.

Scheffler's Theory of Earth Pressure. — Scheffler assumes the resultant pressure to be inclined at the angle of repose ϕ to the horizontal. Therefore for this theory we find P as for the wedge theory, and take the resultant pressure as the resolved component of P in the direction ϕ to the horizontal. This will be clear from the worked example on p. 421. Many authorities object to this theory on the ground that if the earth at the back of the wall is wet, the thrust will not be inclined.

Baker's Practical Rules for Earth Pressure. — Sir Benjamin Baker, as the result of long experience in the practical design of retaining walls, suggested that they should be designed as if the pressure of the earth were equivalent to that of a fluid weighing 20 lb. per cubic foot, and made the thickness of the base from $\frac{1}{4}$ to $\frac{1}{2}$ the height.

Take $\phi = 30°$ roughly, and $w = 120$ lb. per cubic foot. Then for horizontal surface $P = \frac{120 \cdot h^2}{6} = 20h^2$.

According to Baker, $P = \frac{20 \cdot h^2}{2} = 10h^2$, so that Rankine's or the wedge theory would give a factor of safety about twice that of Baker's rule.

Wedge Theory for Wall with Sloping Back.—If the back of the wall slopes it is usual in the wedge theory to take the

Digitized by Google

Δ B A A' (Fig. 188) of earth as assisting the wall. Let G_1 and G_2 be the centroids of wall and Δ respectively, and let their weights be W_1 and W_2, then set out horizontally from G_2 a line to represent W_1, and from G_1 one to represent W_2. Join across, and

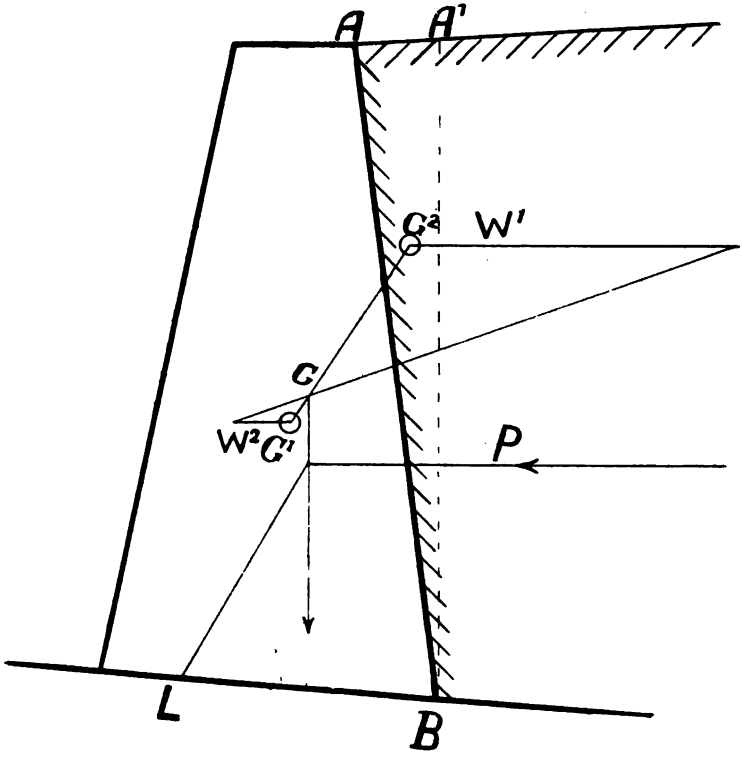

Fig. 188.—*Wedge Theory for Retaining Wall with Sloping Back.*

where they cut $G_1 G_2$ in G gives the point through the resultant weight $W_1 + W_2$ is taken to act. P is found, and the rest of the work is completed as in the ordinary case.

Calculation of Width of Base of Retaining Wall.—In this case, if the earth is horizontal, we proceed exactly as in the

Digitized by Google

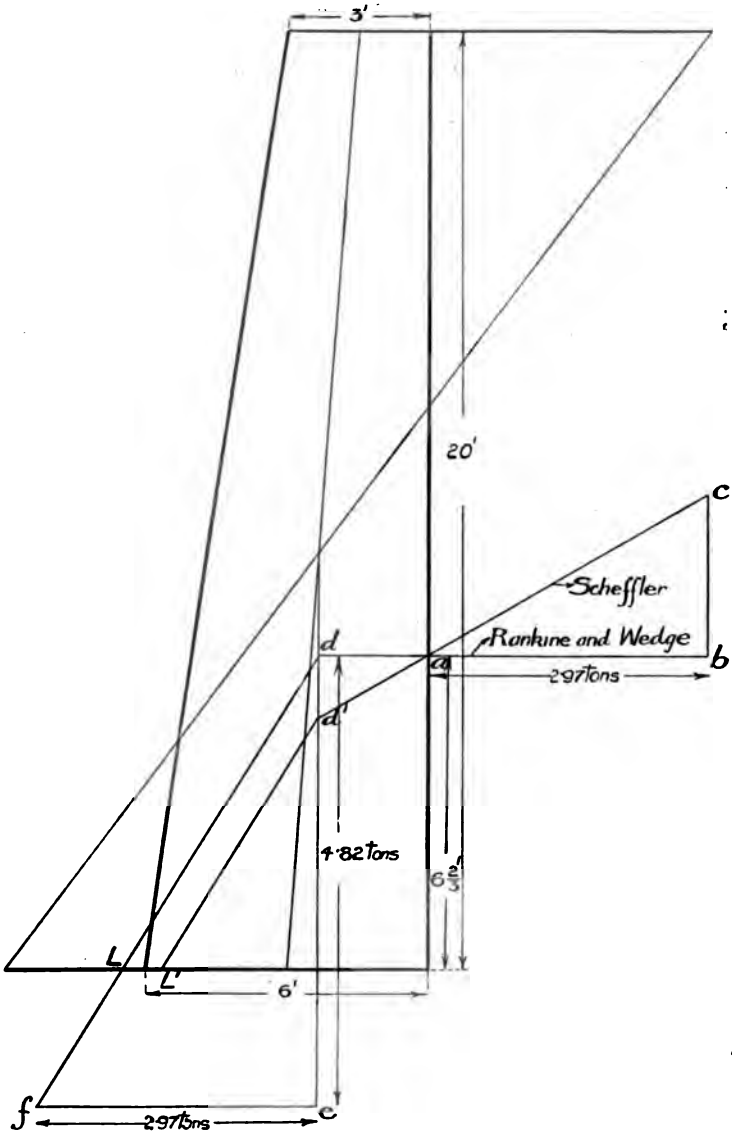

Fig. 189.—*Example of Retaining Wall.*

Digitized by Google

case of the dam (see p. 401), but instead of having $P = \frac{\rho h^2}{2}$ we have $P = \frac{w_e h^2}{2} \frac{(1 - \sin \phi)}{(1 + \sin \phi)}$, so that in equation (4), (p. 401) we should substitute $\frac{w_e}{2}\left(\frac{1 - \sin \phi}{1 + \sin \phi}\right)$ for ρ.

In conclusion, it must be admitted that none of the above theories of earth pressure are really satisfactory, but they give results that are found to be safe in practice, and so may be used as a safe guide. There is great need of some further experimental work on the subject.

Numerical Examples of Retaining Walls.

(1) *A retaining wall is 20 ft. high and the level of the earth is horizontal. The wall is 6 ft. wide at the base and 3 ft. wide at the top and weighs 120 lb. per cub. ft., the back being horizontal. If the angle of repose for the earth is 30° and the weight is 100 lb. per cub. ft. determine the stability of the wall.*

In this case $P = \frac{w_e h^2}{2} \frac{(1 - \sin \phi)}{(1 + \sin \phi)} = \frac{100 \cdot 20 \times 20}{2} \cdot \frac{(1 - \cdot 5)}{(1 + \cdot 5)}$ lb.

$$= \frac{100 \times 400}{2 \times 2240} \times \frac{1}{1\frac{1}{2}} \text{ tons} = 2 \cdot 97 \text{ tons}$$

$$W = \frac{20 \times \frac{(6 + 3)}{2} \times 120}{2240} = \frac{1200 \times 9}{2240} = 4 \cdot 82 \text{ tons}$$

Fig. 189 shows the section of the wall, the centroid being found as indicated. Set out $a\,b$ equal to 2·97 tons, horizontally at one-third of the height from the base, and produce it to meet the vertical through the centroid in d. Then set down $d\,e$ vertically equal to 4·82 tons, and $e\,f$ horizontally equal to $a\,b$, then $d\,f$ is the line of pressure, and comes outside the base so that the wall on Rankine's and the wedge theory is unstable. For Scheffler's theory draw a vertical through b and draw $a\,c$ at an angle $\phi = 30°$ and produce $a\,c$ to meet the centroid vertical in d', then if d' L′ is parallel to d L, L′ is the load point on Scheffler's theory, this load point coming inside the base but outside the middle third.

(2) *A surcharged retaining wall is of the section shown in Fig. 190, the surcharge being 20° and the earth weighing 120 lb. per cub. ft. and having an angle of repose of 29°. Determine the stability of the wall if the masonry weighs 150 lb. per cub. ft.*

The centroid is first found as indicated in dotted lines, and the

Digitized by Google

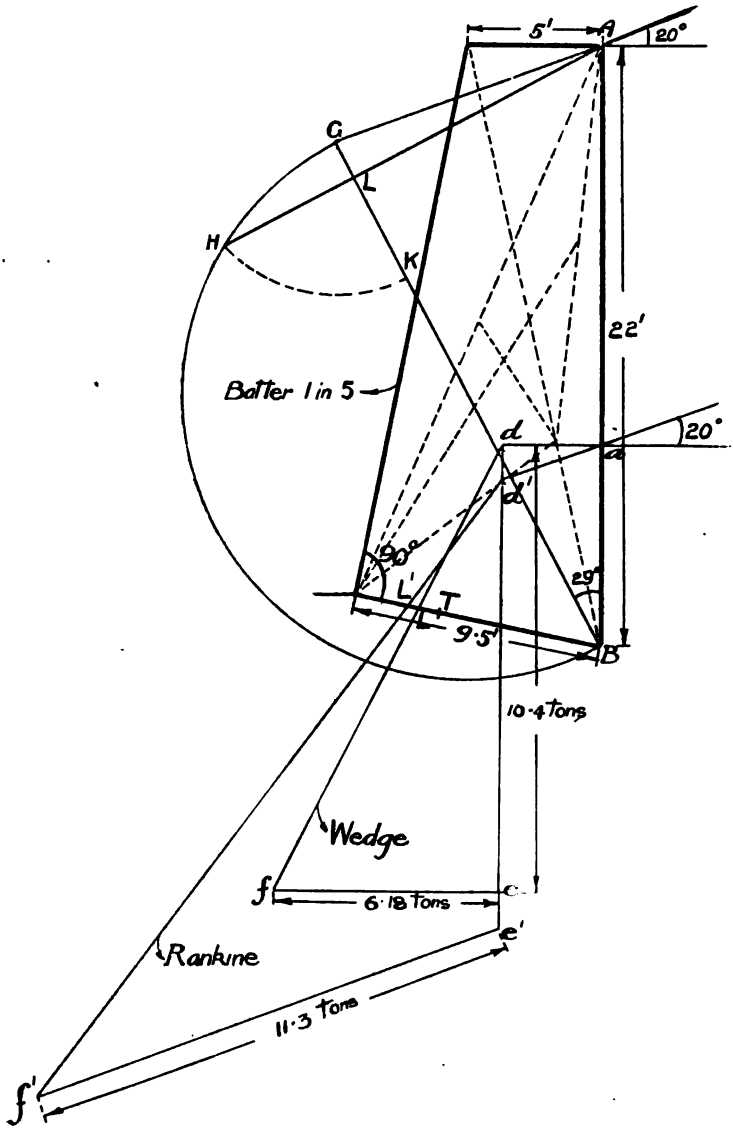

Fig. 190.—*Example of Surcharged Retaining Wall.*

Digitized by Google

weight per foot length of the wall is calculated. This weight comes to 10·4 tons.

On the wedge theory the length B k, obtained as shown in Fig. 187, is found, and comes to 15·2 ft.

$$\therefore P = \frac{120}{2} \times \frac{15{\cdot}2 \times 15{\cdot}2}{2240} = 6{\cdot}18 \text{ tons.}$$

Then, as in the previous case, setting out $d\,e = 10{\cdot}4$ and $e\,f = 6{\cdot}18$ we get the load point L which comes just outside the middle third point T.

On Rankine's theory, P at an angle of 20° to the horizontal is equal to

$$\frac{w_e\, h^2 \cos 20}{2} \left(\frac{\cos 20 - \sqrt{\cos^2 20 - \cos^2 29}}{\cos 20 + \sqrt{\cos^2 20 - \cos^2 29}} \right).$$

This comes to about 11·3 tons, so that setting down $d'\,e'$ equal to 10·4, and $e'\,f'$ equal to 11·3 at an angle of 20° to the horizontal, we get L′ the load point on Rankine's theory, which comes a little further from T.

If Scheffler's theory be tried, as in the previous case, the load point will be found to come just inside the middle third.

Stability of Walls and Chimneys subjected to Wind.—The stability of masonry walls and chimneys can be easily determined in the following manner.

The pressure of the wind is taken per square foot as horizontal and independent of the height, so that the resultant wind pressure P, Fig. 191, acts at the centroid, and in the case of chimneys is equal to the pressure per square foot multiplied by the equivalent area of the cross section.

$$i.e., \quad P = P_v \times a \,.\, H \,.\, d$$

Where a = a constant depending on the shape of the section (values for a are given on p. 50).

H = height.

d = mean diameter perpendicular to the direction of wind.

P_v = intensity of wind pressure.

In the case of walls the stability is considered per foot length of the wall, then $P = P_v \,.\, H$.

Let W be the weight of the chimney or of the wall per foot length.

Produce P to meet the line of action of the weight in a, and make $a\,b$ = W and $b\,c$ = P, and join A C cutting B D in E.

Digitized by Google

Then if E falls outside the base, the wall would overturn if simply resting on its base.

If E falls outside the core (or the middle third in the case of the wall) then there will be tension in the mortar at B, while if E falls inside the core the wall is quite stable.

Many walls will be found to fail in the condition as to the line of pressure falling within the middle third, and yet they stand.

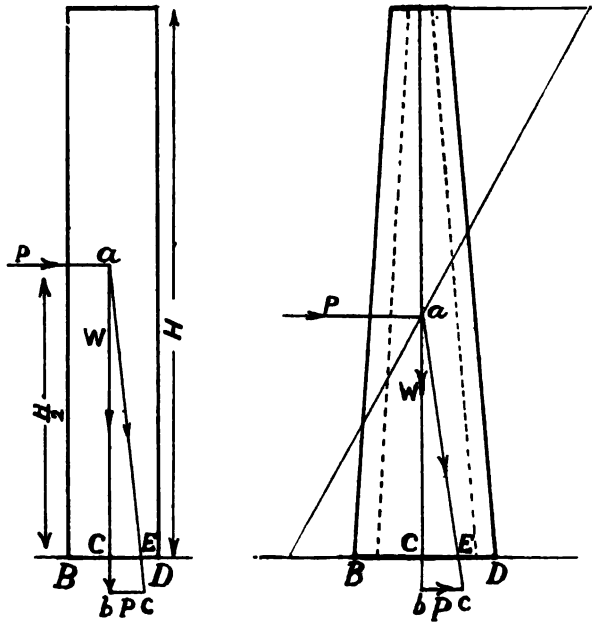

Fig. 191.—*Stability of Walls and Chimneys.*

There are many possible explanations of this. They probably have never been subjected to a wind pressure of the intensity assumed in the calculation. Then again, we do not say that if the line pressure falls outside the middle third the wall will topple over; it only means that there will be some tensile stress in the mortar, and even if such tensile stress were enough to cause a small crack in the mortar it does not follow that the wall will collapse, if the compression stress on the remainder is still within

Digitized by Google

safe limits. It is very difficult to say exactly at what point the point E would have to come to make the wall collapse. As we have already stated some writers state that the middle half is quite safe. There is another point to remember in connection with walls. The above reasoning applies only to walls of indefinite lengths, because side walls connected at right angles to the wall under consideration add considerably to its stability, but it is very difficult to allow for this satisfactorily in the theory.

Stability of Buttresses and Piers.—A buttress or pier is a structure designed to carry thrusts. Buttresses are used, as a rule, to take the thrusts from arches, especially arched roofs, and should be designed so that the line of pressure keeps within the middle third. Their stability is considered in exactly the same way as that of dams, by combining the thrust or thrusts with the weight above any given section, and finding where the load point comes on such section.

Let a buttress be of the form shown in Fig 192, and let the thrusts on it be S and T. The stability at the lines A, A; B, B; and C, C, is then determined as follows :—

Let G_1; $G_{1,2}$; $G_{1,2,3}$, be the centroids of the sections above the given lines, and let the weights of the separate sections of the buttress be W_1, W_2, and W_3.

The points G_1, &c., can be obtained graphically as indicated on p. 399 for the dam, or by finding the centroid of each separate section, indicated at G_1 G_2 G_3 at the side of the figure. Then set out horizontally G_1 H = W_2 and G_2 J = W_1 and join J H and G_1 G_2. Their intersection gives $G_{1,2}$. Then set out $G_{1,2}$ K = W_3 and G_3 L = W_1 and W_2 and join across as before, and $G_{1,2,3}$ is thus found.

Now set out 0, 1 = W_1; 1, 2 = W_2 and 2, 3 = W_3; also 0 4 = S, 4, 5 = T. Produce S to meet the vertical through G_1 in a, and draw a a_1 parallel to 1, 4 to meet A A in a_1.

Let this meet the vertical through $G_{1,2}$ in b and draw b c parallel to 2, 4 to meet T in c, and draw c d_1 parallel to 2, 5 to meet B B in d_1, and let this meet the vertical through $G_{1,2,3}$ in d; finally draw d e parallel to 3, 5 to meet C C in e. Then a_1 d_1 e should keep within the middle third if there is to be no tension in the mortar.

In calculating the stability of buttresses, the weight of the wall

Digitized by Google

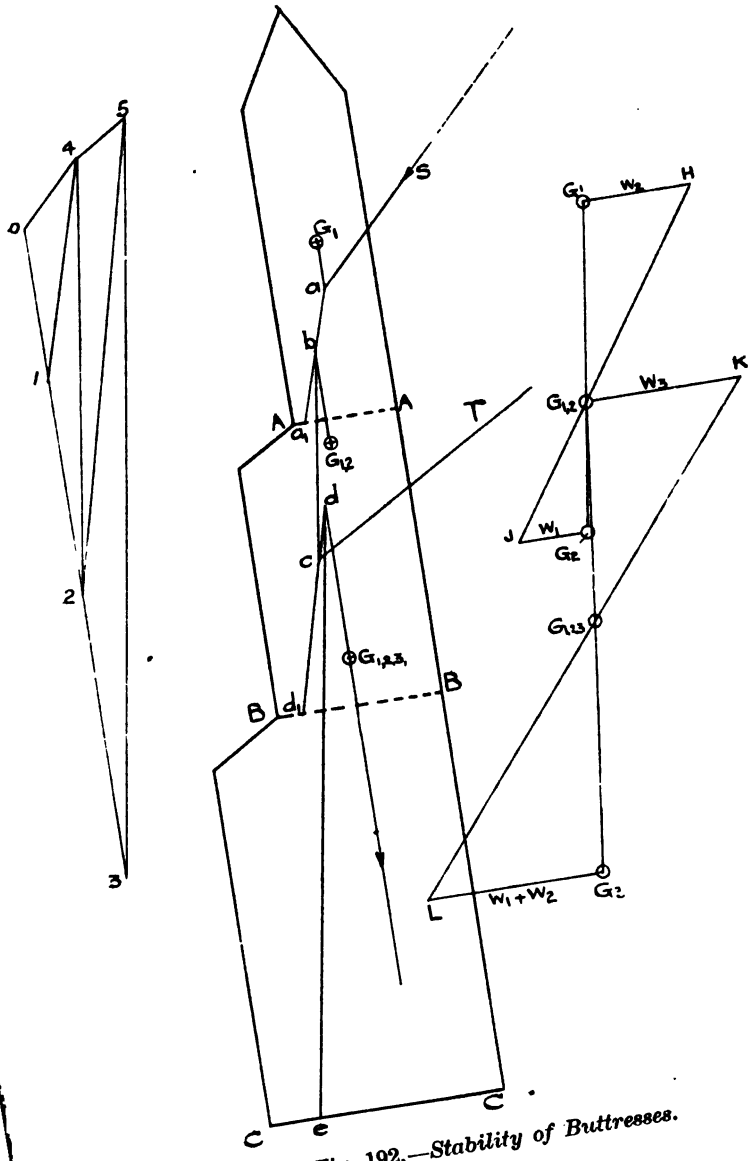

Fig. 192.—Stability of Buttresses.

Digitized by Google

from which the buttress projects may be taken with the weight of the buttress itself, the length of the wall thus taken being equal to the distance between the buttresses. In plan the section of the combined wall and buttress is a short-legged T, and the centroid of this section is taken for G_1 G_2, &c.

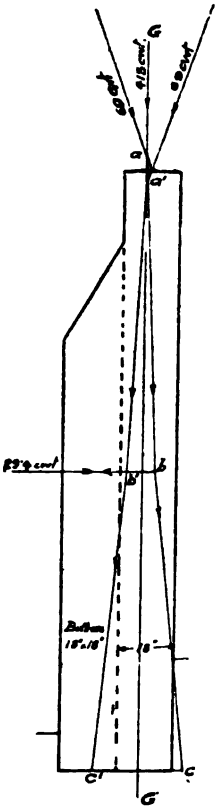

(*Builders' Journal.*)

Fig. 193.—*Example in Buttresses.*

The following example from practice in the design of a church roof should make this clear. The weight of the wall and buttress, shown in Fig. 193, is 413 cwt. the buttresses being 11′ 9″ apart, and the centroid line G G of the whole section comes about

Digitized by Google

$\frac{1}{10}$ in. from the centre of the wall. The reactions transmitted from the roof for the wind on either side are 69 cwt. at the inclinations shown, and the wind-force on the walls is 29·4 cwt., taking half the total wind-force as being transmitted through the building and carried by each wall. Combining these forces we get the line of pressure $a\,b\,c$, $a_1\,b_1\,c_1$ for the wind on either side of the building. It will be noted that in this case the worst line of pressure, viz., $a_1\,b_1\,c_1$ comes outside the section, the walls then tending to fall *inwards*. This means to say that this buttress cannot carry half the loads as suggested, and so the buttress on the other side must carry more than half. But this would bring the line corresponding to $a_1\,b_1\,c_1$ also outside the section, and so this buttress would be unsafe as regards a tendency to fall *outwards*. We point this out at length because it might at first sight be thought that as a buttress is used to prevent the walls from falling outwards, the tendency to fall inwards on one side need not be considered.

PINNACLES ON BUTTRESSES.—In cathedrals and other buildings with buttresses there are usually to be found ornamental pinnacles on the top of the buttresses. From a consideration of the above it will be seen that such pinnacles are useful as well as ornamental, since they add to the weight of the buttresses, and thus increase their stability, especially at points a short distance below the points where the thrusts come.

Note on Drawing for Walls, Chimneys, and Buttresses.—In obtaining the stability of walls, chimneys, and buttresses graphically, it will be found that the drawing has to be done to a very large size to get the base of appreciable size. For this reason it is a good plan to draw the horizontal distances to a larger scale than the vertical ones, taking due precaution when calculating the weights, &c., from the section.

MASONRY ARCHES.

The theoretical determination of the stability of a masonry arch is one of the most troublesome problems to deal with satisfactorily in the theory of structures. In the first place we cannot satisfactorily allow for the additional strength that the filling gives, and even if we treat the arch ring proper as an arch of elastic material, and stipulate that the line of pressure must lie within

Digitized by Google

the middle third, we have still the difficulty of obtaining the horizontal thrust.

Terms used in Masonry Arches. (See Fig. 194.)

The *intrados* and *extrados* are the inner and outer boundaries of the arch ring, the intrados being sometimes called the *soffit*, and the extrados the *back*.

The *skewback* is the sloping abutment on which the lowest end or *springing* (or *haunch*) of the arch rests.

The *span* is measured between the lower edges of the skewbacks.

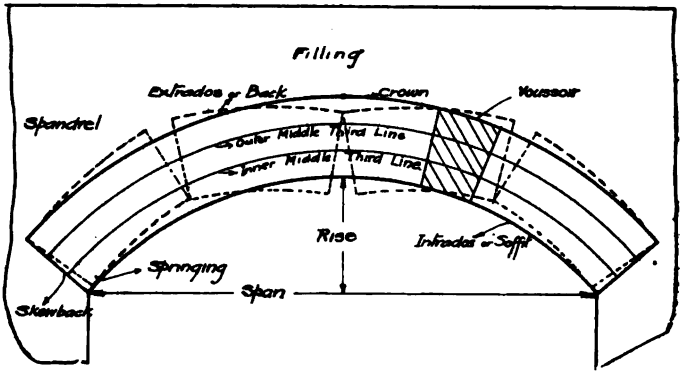

Fig. 194.—*Masonry Arches.*

The *rise* is measured from the line joining the lower edges of the skewbacks to the intrados or soffit.

The *voussoirs* are the wedge-shaped blocks of which the arch is composed. Such voussoirs are sometimes imaginary.

The *spandrel* is the name given to the space between the extrados and the horizontal tangent at the crown.

Critical Line of Pressure Method of determining Stability.—If the masonry arch be considered as composed of a number of voussoirs placed together without cement, it will be seen that such arch is much more stable than the inverted links (see p. 357), because the loading may vary to any extent so long as the line of pressure does not pass outside the middle third (or middle half according to Scheffler. Now let the *critical line of*

Digitized by Google

pressure be defined as that line of pressure which would occur if the voussoirs are just about to open out. If the arch were going to collapse, and the voussoirs open out, the line of pressure

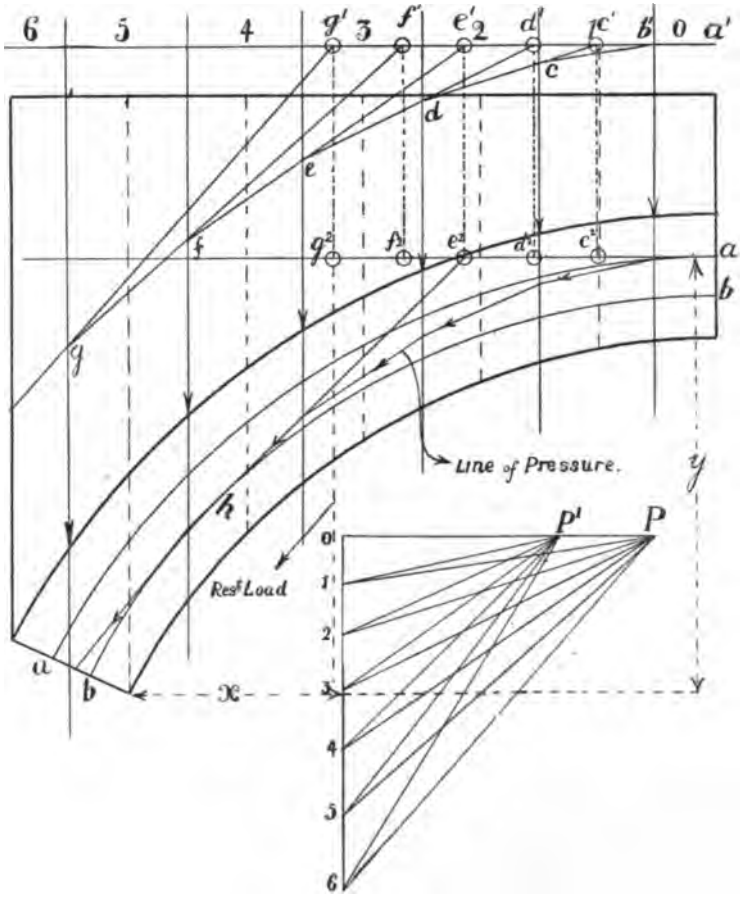

Fig. 195.—*Critical Line of Pressure for Masonry Arch.*

would move, and so if a critical line of pressure can be made to keep within the middle third, such line will not tend to move further, and so the arch will be stable.

Digitized by Google

With symmetrical loading, experiment shows that the arch, when failure occurs, opens out at the crown and at some point between the crown and the springings, as indicated in dotted lines on Fig. 194, so that the critical line of pressure must touch the outer middle third line at the crown and the inner middle third line at some point between the crown and the springings.

For any given case, therefore, we proceed as follows:—

Considering one half of the arch, we first draw the middle-third lines *a a*, *b b*, Fig. 195, and divide the arch up into a number of vertical sections—usually equal—and draw the centre lines of each section. The weight—including that of the arch itself—carried by each section is then calculated, and such weights are used as the forces acting down the force lines o, 1; 1, 2, &c. These weights are set down on a vector line o, 1, 2, &c., and any pole P is taken on the horizontal through o. In our figure we have shown only six sections to avoid complexity of figure. At some convenient place above or below the arch draw a trial line of pressure $a'\ b'\ c\ d \ldots g$, and produce each link back to meet the first link $a'\ b'$ in points $c'\ d'$, &c. ... g_1, and project the points thus obtained vertically on to the horizontal tangents to the outer middle third line *a a*, thus obtaining points a, b^2, c^2, d^2, &c. ... g^2. Now take each of the points b^2, c^2, &c., and see if a line can be drawn through one of them to touch the inner middle third line *b b* in the same segment. If such a line can be found (in our case it can be drawn through the point e^2 to touch in the section 4 in *h*), draw through the corresponding point 4 in the vector line a parallel to this line $e^2 h$. This gives a new pole P′, by means of which the critical line of pressure is drawn as shown, and o P′ = horizontal thrust H.

If no such line can be drawn, then the size of the arch ring should be increased.

Having obtained the critical line of pressure, we have still to see that the maximum compressive stress is within safe limits, and that the line of pressure is not at too great an inclination to the centre line of the arch.

Line of Least Resistance Method of determining Stability.—The method given in many text-books of determining the stability of masonry arches is called by the above

Digitized by Google

name, and is somewhat similar to the method given above. The line of pressure is, however, assumed to touch the middle third lines at the crown and at springing, and so the procedure is as follows :—The trial line of pressure $a, b, c \ldots g$ is drawn as before, and the last link is produced back, giving the point g_1. Then, if the distance of the vertical through g_1 from the point b at the springing is x, and the vertical distance from b to the horizontal through a is y, then if W is the total load on half the arch and H the horizontal thrust, $H = \frac{W x}{y}$. This is then taken as the new polar distance, and the line of pressure starting horizontally at a is drawn. Then, if this lies within the middle third, the arch fulfils the first condition of stability. If not, then the line of pressure is started lower at some point between a and b, or made to end higher at some point between b and a, until by trial a line of pressure is drawn that keeps within the middle third. If after constant trial no such line can be drawn within these limits, then the thickness of the arch is increased, and the work is gone through again.

Practical Rules for Masonry Arches.—(1) THICKNESS OF ARCH.—d = thickness of arch at centre in inches; r = radius at crown in feet; s = span in feet.

Rankine rule. $\frac{d}{12} = \sqrt{\cdot 12\, r}$ for single spans

$= \sqrt{\cdot 17\, r}$ for series of spans.

Trautwine rule. $d = \frac{\sqrt{r + \frac{1}{2}s}}{4} + \cdot 2$

(2) THICKNESS OF ABUTMENTS.—$T = \frac{r}{5} + \frac{a}{10} + 2.$

a = rise in ft.

Height of abutments not greater than $1\frac{1}{2}$ times the base.

(3) CENTRL PIER (in a series).—$\left(\frac{1}{6} \text{ to } \frac{1}{7}\right)$ span thick.

(4) GOOD COMMON RULE FOR BRICK ARCHES.—Use half brick in ring for each 5 ft. of span.

Digitized by Google

(5) COMMON RAILWAY PRACTICE :—

$$\text{Rise} = \frac{\text{span}}{5}$$

$$\text{Thickness} = \frac{\text{span}}{18}$$

Thickness of abutments $\left(\frac{1}{4} \text{ to } \frac{1}{5}\right)$ span

„ centre piers $\left(\frac{1}{6} \text{ to } \frac{1}{7}\right)$ span

Digitized by Google

CHAPTER XV.

*REINFORCED CONCRETE AND SIMILAR STRUCTURES.

Introductory.—The past decade has seen a tremendous development in the method of construction known as reinforced concrete. Concrete, which has been used for centuries as a material of construction, was found to possess very little tensile strength, and over fifty years ago suggestions were made to make up for this weakness by embedding iron rods or lathing in the portion of the structure in which tension would occur. This was applied chiefly to floors, and although there are early records of tests of concrete slabs thus 'reinforced,' it has been only recently that efforts have been made to apply theoretical knowledge to such structures and so to design them upon a scientific basis. With their natural objection to trying new methods which have not stood the test of time, English engineers have been slow to adopt the reinforced concrete construction, and so the greater part of the work has been executed on the Continent and in America.

Now, the full theory of reinforced concrete is not yet standardised, and so there is a very large amount of experimental data and theoretical investigations which require to be digested by those who wish to understand the principles of design. These data and investigations are very dangerous to the uninitiated, because they usually relate to definite qualities of materials and certain special conditions, and one can easily get into gross error in applying a formula when one does not know the meaning of each of the terms in it, and cannot, therefore, judge whether the formula is applicable to the problem in hand. The aim of the present chapter is to set out the fundamental principles upon which the theoretical design of reinforced concrete is based, and thus to enable the reader to follow more easily the more com-

Digitized by Google

plicated investigations which are to be found in the standard text-books on the subject.

Now, the efficiency of any design depends on whether it is as cheap as possible for the given conditions, and, therefore, a reinforced concrete structure should for the same factor of safety be cheaper than one wholly of steel or wholly of concrete, other things being equal. A given volume of steel costs about fifty times as much as the same volume of concrete, and for the same sectional area steel will carry about thirty times as much load in compression and three hundred times as much in tension as concrete. Thus, for compression only concrete will carry a given load at three-fifths of the cost of steel, whereas for tension it would cost six times as much as steel, so that it can be seen that by suitably combining the two materials so that they act as a composite structure, an economical result can be obtained, and the scientific design of reinforced concrete obtains the most economical proportions and arrangement of the two materials.

Properties of Concrete.—The properties of concrete vary with its age and with the proportions and quality of the ingredients, and in adopting any figure for safe stresses in design it is necessary to see that the concrete is of the requisite quality and age for which the figures are accepted as satisfactory.

COMPRESSION.—The compressive strength of concrete is roughly proportional to the proportion of the cement in the mortar. Fig. 195*a* shows a diagram plotted from the results of experiments by Mr. G. W. Rafter, of New York. Clean, pure silica sand and Portland cement were used, and the aggregate consisted of sandstone broken so as to pass through a 2-inch ring, containing 37 per cent. of voids when rammed.

The compressive strength increases with age, and Fig. 196 shows on a diagram the results of experiments made at the Watertown Arsenal, U.S.A., in 1899.

Curve A is for a mixture of one part of cement, two parts sand, four parts of aggregate; and curve B is for a mixture of 1 : 3 : 6. The figures given are for the same brand of cement. It may be taken that for a mixture of 1 : 2 : 4, with high-grade cement, clean, sharp sand, and broken stone or gravel, a safe compressive

Digitized by Google

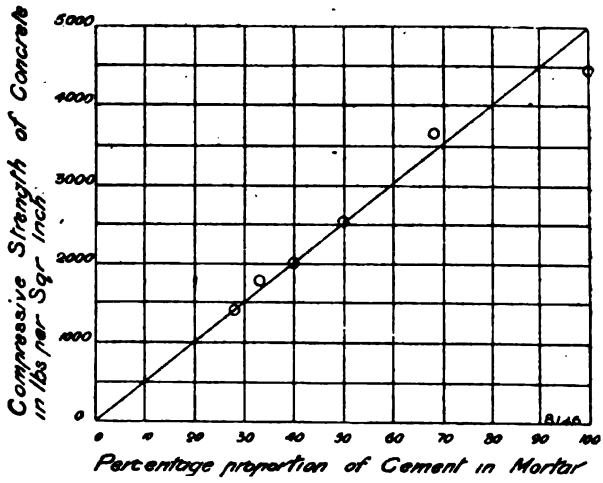

(*Engineering Review.*)

Fig. 195*a*.

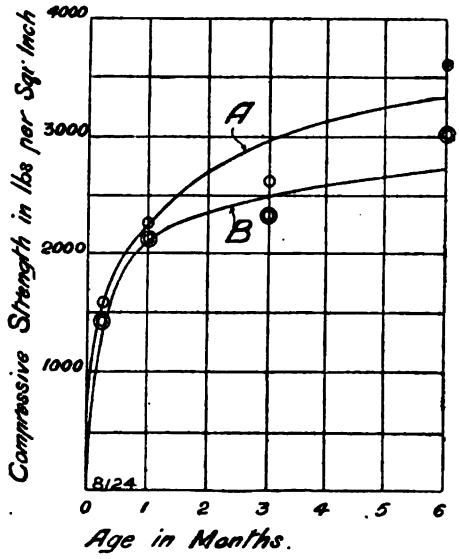

(*Engineering Review.*)

Fig. 196.

Digitized by Google

stress to adopt for bending calculations is 600 lb. per square inch after twenty-eight days.

In this country at present there are few or no local building regulations for reinforced concrete, but many Continental and American towns specify safe stresses.

TENSION.—Not nearly so much work has been done on the tensile as on the compressive strength of concrete. The tensile strength depends upon the composition and age, and most authorities agree in taking the tensile strength as one-tenth of the compressive strength of concrete of the same age and composition. M. Considère, one of the leading authorities on the subject, deduced from experiments that, when reinforced, concrete would bear much greater tensile strain without rupture, the reinforcement having the effect of distributing the extension uniformly along the length, but gave it as his opinion that the concrete when in this extended state would not carry any additional load. Professor Turneare made some similar experiments, and these seem to discredit Considère's theory. The latter experiments seem to indicate that minute cracks, invisible to the eye but permeable to water, occurred in the overstrained concrete, and that test pieces including such cracks were much weaker than those taken between them. Future work will probably throw more light upon this very interesting point. In most of the theories of reinforced concrete it is assumed that the tensile strength of the concrete is negligible, and that all the tensile forces are carried by the reinforcement. This will be more clearly explained later in considering beams.

SHEAR.—The shear strength of concrete is not known very exactly. Indeed, shear strength is a very troublesome thing to determine experimentally, and is always of a somewhat complicated nature, as it involves the compressive and tensile strengths. According to different authorities, the shear strength varies from ·12 to ·2 of the compressive strength. For the composition given in the case of compression, the safe shear stress may be taken as 75 lb. per square inch.

MODULUS OF ELASTICITY.—This property, which does not enter very much into the design of ordinary structures, is of great importance in reinforced concrete. It is defined as the ratio

Digitized by Google

between the stress per square inch and the strain per inch length. The reason why this quantity is of such great importance is that the concrete and steel act together as a composite structure, and so the strains in both materials will be the same under direct load. For a given strain a given stress results, and this stress can be found only when the modulus of elasticity is known. In designing work, it is the ratio of the moduli of steel and concrete that we require to know, and not the absolute value of each.

Now, when concrete is compressed, the diagram showing the relation between stress and strain is not straight, as will be seen from Fig. 3, p. 8, and, therefore, it is not quite right to speak of an elastic modulus, because the value changes according to the stress. In compression the value of the elastic modulus for 1 : 2 : 4, concrete varies, according to various experimenters, from about 1,300,000 lb. per square inch to about 4,000,000 lb. per square inch, and is smaller for higher stresses. For mild steel the elastic modulus is much less variable, and is about 29,000,000 lb. per square inch. The values of the ratio of the elastic moduli for the above extremes are thus 22·3 and 7·25. We shall, in future, denote this ratio by *e*. The value adopted in practice varies from 8 to 15, and the latter figure is becoming quite common, and is specified in the recent new building regulations for San Francisco, and in the Report of the R.I.B.A. on Reinforced Concrete (1907). The importance of this ratio points to the necessity of further work on the subject, and it should be remembered that the best value to use is the one found for the given mixture between the stress limits adopted for the design. The modulus in tension for concrete is not the same as in compression, and experimental results seem to be rather in conflict. It is usual to neglect the tensional resistance of the concrete, and so we will give no further information concerning this modulus.

ADHESION BETWEEN CONCRETE AND STEEL.—It is absolutely necessary in a reinforced concrete structure that there shall be a good bond between the concrete and the steel, for the latter will bear its share of the stress only so long as there is no relative movement between the steel and the concrete. Directly such relative movement takes place the tensile stress will come upon the concrete, and cracks will result. To ensure the efficiency

Digitized by Google

of the bond, many of the reinforced concrete systems employ reinforcing bars, which are notched, or twisted, or otherwise provided with mechanical means for ensuring a good bond. With plain round bars the adhesion per square inch of the surface of the steel can be found by embedding a length of steel rod in concrete and measuring the force necessary to pull it out. If l is the length embedded and d the diameter, then $\pi d \times l$ is the area of the surface of contact, and if F is the force necessary to pull the bar out of the concrete, and f_a the adhesive stress per unit area, then

$$f_a = \frac{F}{\pi d \times l}$$

Here, again, there is a great variation according to different experimenters, the value of f_a varying approximately from 150 to 600 lb. per square inch, but for the quality of mixture for which figures have been given 75 lb. per square inch is commonly considered as a satisfactory working adhesive stress.

Coefficient of Expansion.—A point commonly urged in favour of reinforced concrete construction is that concrete and steel have the same coefficients of expansion, and that there are therefore no internal stresses due to change in temperature. Many authorities do not quite agree with this statement, and state that the coefficients for concrete and steel are 55×10^{-7} and 66×10^{-7} per degree Fahrenheit respectively.

Properties of Steel.—The properties of steel are set out in Chapter I.

Elastic Limit.—The elastic limit depends upon the proportion of carbon in the steel, and for mild steel may be taken as about 36,000 lb. per square inch, but the exact figure should be obtained whenever possible. Now, this quantity, which is rather neglected in ordinary structural work, is of great importance in reinforced concrete, for all the calculations are based on the elastic modulus up to the elastic limit, and as soon as the elastic limit is passed this modulus quickly diminishes, and the concrete has to suddenly bear a larger stress in consequence. Safe working stresses for tension in the steel should be, therefore, taken as a certain proportion of the elastic limit and not of the ultimate

Digitized by Google

strength. The new rules of San Francisco, previously referred to, specify that the working tensile stress shall be taken as one-third of the elastic limit. For the steel above referred to, this would give a working stress of 12,000 lb. per square inch. The R.I.B.A. allows one-half of the elastic limit. The strength and other properties of steel in compression may be taken as the same as for tension.

SHEAR.—The shear strength of steel is roughly about four-fifths of its tensile strength, and the working stress for shear may be taken as 10,000 lb. per square inch.

Reinforced Concrete under Simple Compression.—The following note on the strength of reinforced concrete under pure compression will assist in understanding the theory of bending to be given later.

For the simplest case, we will take a concrete column reinforced with a central steel core. We must assume that the column is sufficiently short for buckling to be neglected, this commonly being considered as allowable if the length is not more than fifteen times the least diameter. We have dealt with this in general terms on p. 38, but will repeat it here for reinforced concrete. Suppose that the load carried is W, and the length l, and let the areas of cross section of steel and concrete be A_s and A_c respectively. When the load is applied a certain compression per unit length, say x, results (x is total compression divided by l). Further, let the elastic moduli of steel and concrete be E_s and E_c and the compressive stresses f_s' and f_c' respectively. Then

$$E_s = \frac{f_s'}{x} \text{ or } x = \frac{f_s'}{E_s} \quad \ldots\ldots (1)$$

But since there is no slip between the steel and the concrete, x is also the strain in the concrete.

$$\therefore x = \frac{f_c'}{E_c} \quad \ldots\ldots (2)$$

$$\therefore \text{We get } \frac{f_c'}{E_c} = \frac{f_s'}{E_s}$$

$$\text{or } f_s' = \frac{E_s}{E_c} \cdot f_c' = e \cdot f_c' \quad \ldots\ldots (3)$$

Digitized by Google

Now the load carried by the steel is $f_s' \times A_s$ and by the concrete $f_c' \times A_c$

$$\therefore \text{ Total load } W = f_s' \times A_s + f_c' \cdot A_c$$
$$= f_c' \cdot e\, A_s + f_c' \cdot A_c$$
$$= f_c' (A_c + e \cdot A_s) \quad \ldots\ldots (4)$$
$$\text{or } = f_s' \left(\frac{A_c}{e} + A_s \right) \quad \ldots\ldots (5)$$

Thus we see that the reinforced column behaves in the same way as a concrete column of the same length and of area equal to that of the concrete together with e times the area of the steel.

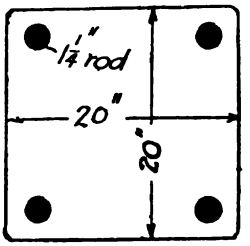

(*Engineering Review.*)

Fig. 197.

The following numerical example will make this more clear: –

Fig. 197 shows a column 20 ins. square, reinforced with four 1¼ in. bars. Required to find the working load if the working compressive stress of concrete is taken as 450 lb. per sq. in. (A slightly lower figure is usually taken for direct compression than for compression in bending.)

In this case

$$A_s = 4 \times 1{\cdot}2227 = 4{\cdot}91 \text{ sq. in. nearly}$$
$$A_c = 20 \times 20 - 4{\cdot}91 = 395 \text{ nearly.}$$

Then if

$$e = 15$$
$$W = 450\,(395 + 15 \times 4{\cdot}91) \text{ lb.}$$
$$= 210{,}870 \text{ lb. nearly.}$$
$$= 94 \text{ tons nearly.}$$

To get the stress in the steel, we see from (5) that

$$f_c' = \frac{W}{\frac{A_c}{e} + A_s} = \frac{e\,W}{A_c + e\,A_s} = \frac{15 \times 210{,}870}{468{\cdot}6}$$
$$= 6730 \text{ lb. per sq. in. nearly.}$$

Digitized by Google

To get the adhesive stress, we may proceed as follows:

Load carried by concrete $= f_c' \times A_c = 177{,}750$ lb.

Load carried by steel $= f_s' \times A_s = 33{,}100$ lb.

The difference carried by the adhesion is 144,650 lb.

Taking the length of the column as 24 ft., the area of the adhesive surface is $4 \times 24 \times 12 \times \pi \times 1\frac{1}{4} = 4520$ sq. in.

$$\therefore \text{ Adhesive stress} = \frac{144{,}650}{4520} = 32 \text{ lb. per sq. in. nearly.}$$

REINFORCED CONCRETE BEAMS.

There are many formulæ for the strength of reinforced concrete beams, such formulæ being deduced from certain assumptions with reference to the distribution of stress in the bent beam.

We will consider three methods of calculating the stresses in reinforced concrete beams, working in each case the case of a rectangular section, this being most common, and in all three we will make the following assumptions:

(1) That a section of the beam which is plane before bending remains plane after bending. (Bernoulli's assumption (see p. 145).

(2) That the beam is subjected to pure bending, *i.e.*, that the total compressive stress is equal to the total tensile stress.

Standard Notation. — Throughout the chapter we will adopt the following notation (see Fig. 198).

e = $\dfrac{\text{Young's modulus for steel or other metal}}{\text{Young's modulus for concrete}} = \dfrac{E_s}{E_c}$

n = $e - 1$.

f_s = Tensile stress per sq. in. in reinforcement.

f_c = ,, ,, ,, concrete.

f_s' = Compressive ,, ,, reinforcement.

f_c' = ,, ,, ,, concrete.

A_s = Area of cross section of reinforcement.

A_c = ,, ,, ,, concrete.

b = Breadth of beam.

h = Total depth of beam.

q = Depth of beam to centre of reinforcement.

x = Depth from compressive edge to neutral axis (N.A.).

y = ,, ,, tensile ,, ,, ,,

v = ,, ,, centre of reinforcement to neutral axis.

Digitized by Google

d' = Distance from centre of reinforcement to tensile edge.
r = Proportional area of reinforcement to whole section.
p = Proportional area of reinforcement to area above it = $\frac{A_s}{bq}$

First Method—Ordinary Bending Theory.— The first method which we will consider is one which is not much used in

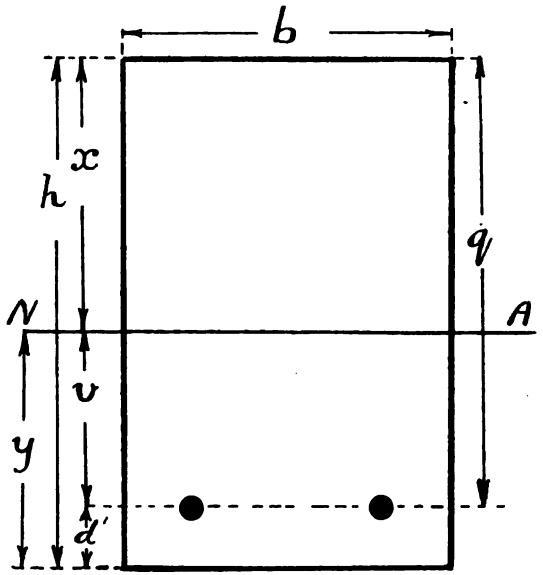

Fig. 198.—*Notation for Reinforced-concrete Beams.*

practice because it gives safe loads which are lower than tests show to be necessary. It is, however, the general method applicable to beams formed of two elastic materials, and serves as a useful and instructive introduction to the subject.

According to this method, we assume that the reinforced beam behaves exactly as an ordinary homogeneous beam with the reinforcement replaced by a narrow strip e times the area of the reinforcement, and at constant distance from the N.A.

We showed how to find the centroid, moment of inertia, and

Digitized by Google

radius of gyration of such an equivalent homogeneous section on page 80.

In the general case, let x and y (Fig. 199) be the distance to

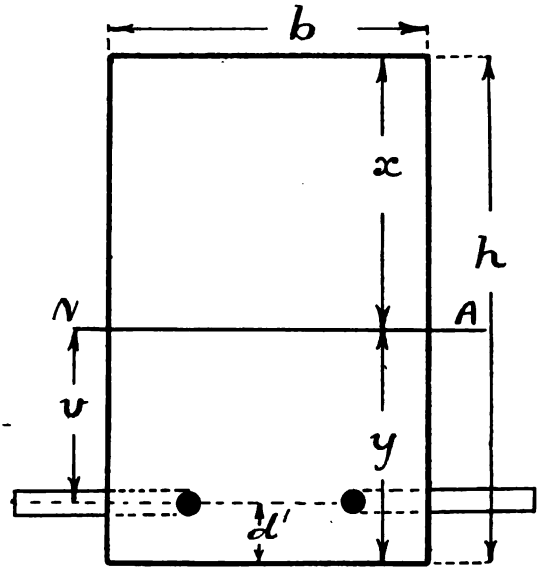

Fig. 199.—*Reinforced-concrete Beams. Method* 1.

the neutral axis (equivalent centroid) and I, the equivalent moment of inertia about the centroid.

$$\text{Then } f_c = \frac{M y}{I} \quad \ldots\ldots \quad (1)$$

$$f_c' = \frac{M x}{I} \quad \ldots\ldots \quad (2)$$

$$f_s = e \cdot \frac{M v}{I} \quad \ldots\ldots \quad (3)$$

where M is the bending moment.

In the case of the rectangular beam we then get the following results :

$$\text{Equivalent area of section} = b h + (e - 1) A_s$$
$$= b h + n A_s \quad \ldots\ldots \quad (4)$$

Digitized by Google

As explained on page 80, it is $(e - 1)\,A_s$, because when we take away the reinforcement and replace it by e times its area of concrete, we have first to fill up the hole in which the reinforcement was, and this takes once A_s, so that remaining additional area $= (e - 1)\,A_s$.

Take moments round the base, then we have

$$y\,(b\,h + n\,.\,A_s) = \frac{b\,h^2}{2} - n\,.\,A_s\,.\,d_1$$

$$\therefore\ y = \frac{\frac{b\,h^2}{2} + n\,A_s\,d_1}{b\,h + n\,A_s} \quad \ldots\ldots\ldots\ldots\ldots\ (5)$$

This fixes the position of the neutral axis.

Taking second moments about the neutral axis, we have

$$I = \frac{b\,x^3}{3} + \frac{b\,y^3}{3} + n\,v^2\,A_s \quad \ldots\ldots\ldots\ldots\ldots\ (6)$$

In this formula we neglect the second moment of the reinforcement about its own axis.

NUMERICAL EXAMPLE.—*Take the case of a beam 6 ins. wide and 12 ins. deep, the centre of the reinforcement being 2 ins. from the bottom and the area of reinforcement* = 1·44 *(See Fig. 200).*

Taking $e = 15$, we get

$$y = \frac{72 \times 6 + 14 \times 1{\cdot}44 \times 2}{72 \times 14 \times 1{\cdot}44}$$

$$= \frac{6 + {\cdot}56}{1 + {\cdot}28} = 5{\cdot}13 \text{ ins.}$$

$$\therefore\ x = 12 - 5{\cdot}13 = 6{\cdot}87 \text{ ins.}$$

$$I = \frac{6 \times (6{\cdot}87)^3}{3} + \frac{6 \times (5{\cdot}13)^3}{3} + 14 \times 1{\cdot}44 \times 3{\cdot}13^2$$

$$= 626 + 270 + 197 = 1093 \text{ nearly.}$$

∴ Taking a safe stress of 100 lb. per sq. in. in tension for the concrete,

$$\text{Safe B.M.} = \frac{100 \times 1093}{5{\cdot}13 \times 12} = 1775 \text{ ft. lb.}$$

$$\text{Then } f_c' = \text{comp. stress in concrete} = \frac{100 \times 6{\cdot}87}{5{\cdot}13} = 134 \text{ lb./in.}^2$$

$$\text{Then } f_s = \text{Tensile stress in steel} = \frac{15 \times 100 \times 3{\cdot}15}{5{\cdot}13} = 915 \text{ lb./in.}^2$$

It will be seen that we have taken $f_c = 100$, which is higher than usually allowed for concrete in tension; but if the concrete cracked the steel would still hold, and so we are justified in using a higher stress.

Digitized by Google

The above example shows that on this method of calculation the beam is not very economical, as the steel is very little stressed and the concrete has only a small stress in compression.

For this reason it is usual in practice to neglect the tensile stresses in the concrete, that is to say, that it does not matter if the concrete does crack. Practice shows that such cracks, if present (see p. 438, ll. 5–22), do not matter so long as the adhesion between steel and concrete is good, and the tensile stress in the steel and the compressive stress in the concrete are within safe limits.

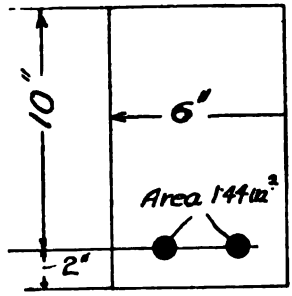

(*Engineering Review.*)

Fig. 200.

We should like in this connection to point out that to neglect the tensile stresses in the concrete does not, as some writers state, increase the factor of safety. We shall see later that neglecting such stresses we get a much larger safe B.M. on the beam, and thus *reduce* the factor of safety.

STRENGTH OF SAME BEAM NOT REINFORCED.—To serve as a useful comparison we will find the strength of a 12″ × 6″ concrete beam without reinforcement.

$$\text{If not reinforced, } f_c = \frac{M \times 6}{\frac{6 \times 12^3}{12}} = 144\ M$$

In this case we must take safe f_c = 50 lb./in.²

$$\therefore \text{ Safe B.M.} = \frac{50 \times 144}{12} = 600 \text{ ft. lb.}$$

Therefore, calculating by our first method, the reinforced beam is roughly three times as strong. It would cost roughly twice as much, so that we see there is 50% saved.

Digitized by Google

Second Method—Straight-line, No-tension Method.—This method we name as above, because the additional assumptions are indicated by such name.

We will now make the following additional assumptions :

(*a*) All the tensile stress is carried by the reinforcement.

(*b*) For the concrete the stress is proportional to the strain.

(*c*) The area of reinforcement is so small that we may assume the stress constant over it.

Fig 201 shows the section, strain diagram, and stress diagram.

In accordance with our first assumption (p. 144) a vertical plane section becomes an inclined plane section A′ B′, the neutral axis (N.A.) being at the point C.

What we first require to determine is the position of the N.A.

Now A A′ and D D′ represent the maximum strains in the concrete and the steel respectively, and since the line A′ B′ is assumed straight, these strains are proproportional to their distances from the neutral axis.

$$\therefore \text{We have } \frac{\text{max. strain in concrete}}{\text{max. strain in steel}} = \frac{x}{v} \quad \ldots\ldots\ldots\ldots\ldots\ldots (7)$$

$$\text{but max. strain in concrete} = \frac{f_c'}{E_c}$$

$$\text{and max. strain in steel} = \frac{f_s}{E_s}$$

$$\therefore \frac{x}{v} = \frac{f_c'}{f_s} \cdot \frac{E_s}{E_c} = \frac{e \cdot f_c'}{f_s}$$

$$\therefore x = \frac{v \cdot e \cdot f_c'}{f_s} \quad \ldots\ldots\ldots\ldots\ldots\ldots (8)$$

$$\text{And since } x = q - v$$

$$q - v = \frac{v\, e\, f_c'}{f_s}$$

$$\therefore q = v\left(1 + \frac{e f_c'}{f_s}\right)$$

$$\therefore v = \frac{q}{1 + \frac{e f_c'}{f_s}} \quad \ldots\ldots\ldots\ldots\ldots\ldots (9)$$

This determines the distance from the N.A. when both f_c' and f_s are known ; but this will not always be the case. If the

Digitized by Google

reinforcing bars are of given size, then f_s will depend on that size, and to determine the position of the neutral axis, we proceed as follows:—The stress diagram shows the distribution of stress in the cross section. Since we have assumed the stress proportional to the strain, the stress diagram for the concrete will be a triangle. It will be seen therefore that the mean compressive stress is $\frac{1}{2} f_c'$, and since the compression area is $b \,.\, x$, we see that the total compressive stress is $\frac{1}{2} f_c' \, b \,.\, x$.

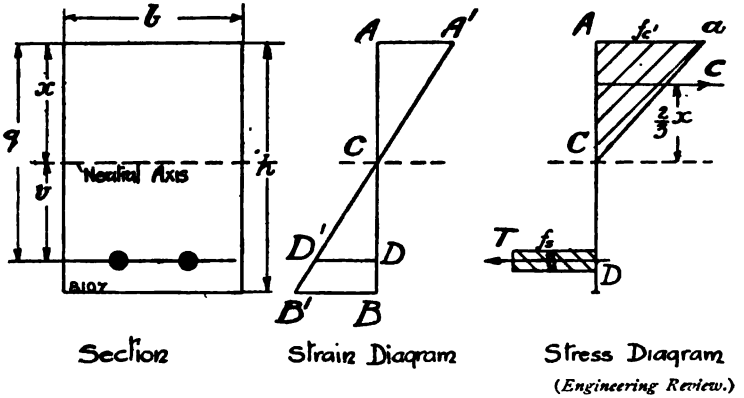

(*Engineering Review.*)

Fig. 201.—*Reinforced-concrete Beams. Method* 2.

As the stress in the steel is assumed uniform, we get that the total tensile stress in the steel is $f_s A_s$, and if the beam is subjected to pure bending these must be equal.

$$\therefore f_s A_s = \frac{1}{2} f_c' \, b \,.\, x \quad \ldots\ldots\ldots\ldots\ldots\ldots (10)$$

$$i.e., \frac{f_c'}{f_s} = \frac{2 A_s}{b \times x}.$$

Comparing this with equation (8) we get—

$$\frac{2 A_s}{b \,.\, x} = \frac{x}{e \,.\, v}$$

$$\therefore b x^2 = 2 A_s e \,.\, v \quad \ldots\ldots\ldots\ldots\ldots\ldots (11)$$

but $v = q - x$.

$$\therefore b x^2 = 2 A_s e q - 2 A_s e \,.\, x$$

$$\therefore b x^2 + 2 A_s e \,.\, x - 2 A_s e \,.\, q = 0.$$

Digitized by Google

The real solution of the quadratic equation gives—

$$x = \frac{A_s e}{b}\left\{-1 + \sqrt{\left(1 + \frac{2 b q}{A_s e}\right)}\right\} \quad \ldots\ldots\ldots\ldots(12)$$

Since all the quantities in this expression are given, this fixes the position of the neutral axis.

We may write this—

$$\frac{x}{q} = \frac{A_s \cdot e}{b q}\left\{\sqrt{1 + \frac{2 b q}{A_s e}} - 1\right\}$$

$$i.e., \frac{x}{q} = p e\left\{\sqrt{1 + \frac{2}{e p}} - 1\right\} \ldots\ldots\ldots\ldots\ldots\ldots(13)$$

For $e = 15$. This gives—

$p =$	$\frac{x}{q} =$
·007	·365
·010	·417
·015	·483
·020	·530

Moment of Resistance.—We can now comparatively simply find the moment of resistance. The resultant compression acts at the centre of gravity of its triangle.

Therefore the distance between the resultant compressions and tensions is $\frac{2}{3} x + v$.

∴ If C and T represent these resultant compressions and tensions, we have that the moment of the couple due to the resisting stresses, which is called the moment of resistance, is given by—

$$M R = C\left(\frac{2}{3} x + v\right)$$

$$= \frac{1}{2} f_c' b x\left(\frac{2}{3} x + v\right) \ldots\ldots\ldots\ldots\ldots(14)$$

$$\text{or, } M R = T\left(\frac{2}{3} x + v\right)$$

$$= f_s A_s\left(\frac{2}{3} x + v\right) \ldots\ldots\ldots\ldots\ldots(15)$$

And this moment of resistance must be equal to the maximum bending moment for the loading.

Digitized by Google

NUMERICAL EXAMPLE.—*Take the same section as worked by the previous formula* (see Fig. 200); and take $f_c' = 500$ lb. per in.²

Then equation (12) gives—

$$x = \frac{1{\cdot}44 \times 15}{6}\left\{\sqrt{1 + \frac{2 \times 6 \times 10}{1{\cdot}44 \times 15}} - 1\right\}$$

$$= 5{\cdot}61 \text{ inches.}$$

$$v = 10 - 5{\cdot}61 = 4{\cdot}39 \text{ inches.}$$

Then M.R. or safe B.M. considering the concrete is equal to—

$$\frac{500 \times 6}{2} \times 5{\cdot}61\left\{4{\cdot}39 + \frac{2}{3}\,5{\cdot}61\right\} \text{ in. lb.}$$

$$= \frac{1500}{12} \times 5{\cdot}61 \times 8{\cdot}13 = 5700 \text{ ft. lb. nearly.}$$

Comparing this with the safe B.M. by the first method we see that the present is more than three times as much.

Stress in steel is then equal to $\frac{\text{M.R.}}{A_s\left(\frac{2}{3}x + v\right)}$

$$= \frac{5700 \times 12}{1{\cdot}44 \times 8{\cdot}31} = 5720 \text{ lb. per in.}^2$$

Assuming a span of 10 ft., the max. B.M. if the load is uniformly distributed is $\frac{W \times 10}{8}$ ft. lb.

$$\therefore \frac{W \times 10}{8} = 5700 \qquad \therefore W = 4560 \text{ lb.}$$

This includes the weight of the beam which is roughly

$$\frac{10 \times 12 \times 6}{144} \times 150 \text{ lb.} = 750 \text{ lb.}$$

$$\therefore \text{Safe load uniformly distributed} = 4560 - 750$$

$$= 3810 \text{ lb.}$$

It will be seen from the stress in the steel that the area of reinforcement is more than it need have been. By combining equations (9) and (10) we could have found the value of A_s to give the stress in the steel, say 10,000* lb per sq. in., when the compressive stress in the concrete is 500 lb. per sq. in.

The above formula gives results which are in fairly good agreement with tests, and is the one most largely used in practice.

* We suggest 10,000, although 15,000 is often used, because we have seen that the elastic limit of the steel almost corresponds to the failure point of the reinforced beam.

Digitized by Google

Third Method—General No-tension Method. — In this method we will, as before, assume that all the tensile stress is taken by the steel, but we will assume that the stress-strain curve for concrete is not straight but some other curve.

In this way we get the stress diagram, Fig. 202, from the strain diagram.

Suppose that its area $= k \cdot x \cdot f_c'$ and that its centroid is at distances $m\,x$ from the neutral axis.

Then, as in equations (8), (9) we get—

$$x = \frac{v \cdot e \cdot f_c'}{f_s}$$

$$\therefore v = \frac{q}{1 + \frac{e\,f_c'}{f_s}}$$

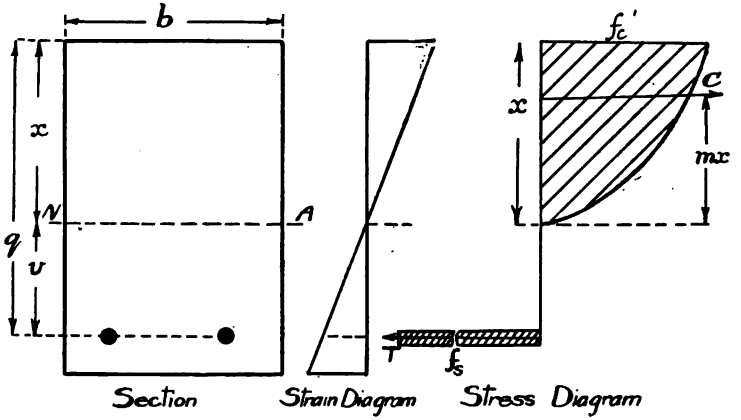

Fig. 202.—*Reinforced-concrete Beams. Method* 3.

Now since the total compressive stress must be equal to the total tensile stress we have :

$$f_s A_s = k \cdot b \cdot x \cdot f_c' \quad \ldots\ldots\ldots\ldots\ldots\ldots\ldots\ldots (16)$$

$$\therefore x = \frac{v \cdot e \cdot A_s}{k \cdot b \cdot x}$$

$$\therefore k\,b\,x^2 = v\,e\,A_s = v\,e\,(q - x)$$

$$\therefore k\,b\,x^2 + A_s\,e\,x - e\,A_s\,q = 0 \quad \ldots\ldots\ldots\ldots\ldots\ldots (17)$$

Digitized by Google

$$x = \frac{A_s e}{2 k b}\left\{\sqrt{1 + \frac{4 q k b}{A_s e}} - 1\right\} \ldots\ldots\ldots(18)$$

$$\text{or, } \frac{x}{q} = \frac{p e}{2 k}\left\{\sqrt{1 + \frac{4 k}{e p}} - 1\right\} \ldots\ldots\ldots\ldots(19)$$

Then moment of resistance

$$= \text{M.R.} = f_s A_s (v + m x) \quad \text{for tension} \ldots\ldots\ldots(20)$$
$$= k b x f_c' (v + m x) \text{ ,, compression} \ldots(21)$$

NUMERICAL EXAMPLE WITH STRESS-STRAIN CURVE PARABOLA. —Take the section that we have worked for the previous formulæ. (See Fig. 200.)

If the stress-strain curve is a parabola tangential at the compression edge we have

$$k = \frac{2}{3}$$
$$m = \frac{5}{8}$$

For the given section $x = \frac{1{\cdot}44 \times 15}{2 \cdot \frac{2}{3} \cdot 6}\left\{\sqrt{1 + \frac{4 \cdot 2 \cdot 10 \cdot 6}{15 \cdot 1{\cdot}44 \cdot 3}} - 1\right\}$

$$= 5{\cdot}12''$$
$$\therefore v = 10 - 5{\cdot}12 = 4{\cdot}88$$

$\therefore$ Safe M.R. for concrete

$$= \frac{2}{3} \times 6 \times 5{\cdot}12 \times 500\left(4{\cdot}88 + 3{\cdot}20\right) \text{ in lb.}$$
$$= \frac{2}{3} \times \frac{6}{12} \times 5{\cdot}12 \times 500 \times 8{\cdot}08 \text{ ft. lb.}$$
$$= 6900 \text{ ft. lb. nearly}$$

Then stress in reinforcement

$$= f_s = \frac{6900 \times 12}{1{\cdot}44 \times 8{\cdot}08} = 7120 \text{ lb. per sq. in.}$$

It will be seen that this method gives higher values still for the safe bending moments. The stress-strain curve for concrete, although nearly parabolic, would not have the vertex of the parabola at a stress of 500 lb. per sq. in.

From the above we think that it should be clear that there is not much difficulty in finding the stress in reinforced concrete beams so long as we know accurately the properties of the concrete, and are clear as to what assumptions we are making.

Reinforced Concrete T Beams.—Reinforced concrete floors usually consist of reinforced slabs with reinforced beams

Digitized by Google

at definite intervals in a longitudinal direction, the whole being monolithic. Fig. 203 shows a section of such a floor, which may be regarded as a number of T beams. The reinforcing bars A in a transverse direction in the slabs are arranged as shown to take the tension at the top where the bending moment reverses, due to the slabs being continuous.

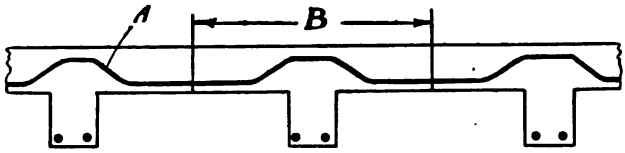

Fig. 203.

It is usual to take the effective breadth of the flanges of the T beams as less than B—$\frac{1}{2}$ to $\frac{3}{4}$ B—because the concrete between the beams acts as a short beam in a direction at right angles, and so the centre portion is comparatively highly stressed for this reason.

We will now consider the stresses in the beam, adopting the no-tension, straight-line method.

CASE 1. If $r > x$ we get the same rules as given in method (2) for rectangular beams, b' being substituted for b.

CASE 2. If $r < x$ we proceed as follows:—

As before we have from a consideration of the strain diagram

$$x = \frac{v\, e\, f_c'}{f_s}$$

$$v = \frac{q}{1 + e\frac{f_c'}{f_s}}$$

Now consider the total stress diagram, Fig. 204, *i.e.*, horizontal lengths of compression figure = compressive stress per sq. in. × breadth of beam.

Now total compressive stress on the section

$$= C = \text{area (BDH} - \text{HFG)}$$

$$= \frac{f_c'}{2}\frac{b' \cdot x}{} - \frac{(b' - b)\, j}{2} \times \frac{j}{x} \cdot f_c'$$

$$C = \frac{f_c'}{2}\left\{b' x - \frac{(b' - b)\, j^2}{x}\right\}$$

But $C = T = f_s A_s$.

Digitized by Google

$$\therefore f_s A_s = \frac{f_c'}{2}\left\{b' x - \frac{(b' - b) j^2}{x}\right\} \quad \ldots\ldots\ldots\ldots (22)$$

$$\therefore \frac{f_c'}{f_s} = \frac{2 A_s}{\left\{b' x - \frac{(b' - b) j^2}{x}\right\}}$$

$$\therefore x = \frac{v e . 2 A_s}{\left\{b' x - \frac{(b' - b) j^2}{x}\right\}}$$

$$x\left\{b' x - \frac{(b' - b) j^2}{x}\right\} = 2 A_s e (q - x)$$

$$b' x^2 - (b' - b) j^2 = 2 A_s e q - 2 A_s e x$$

$$\therefore b' x^2 + 2 A_s e x - \{(b' - b) j^2 + 2 A_s e q\} = 0 \ldots (23)$$

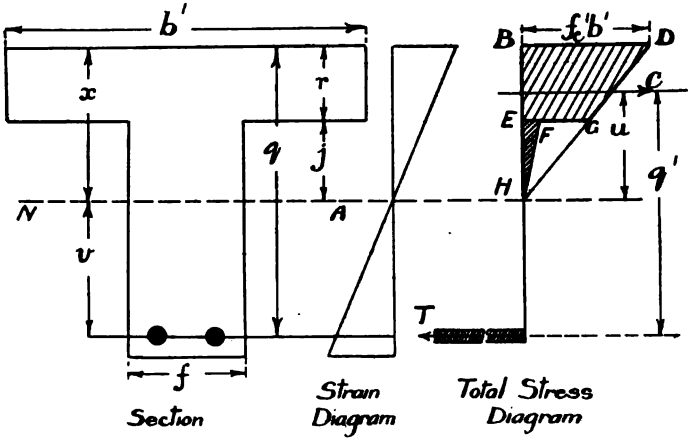

Fig. 204.—Reinforced T Beams.

From this quadratic the value of x can be found.

Then if the centroid of the compressive stress-strain curve area is at distance q' from the centre of reinforcement

$$\text{Safe B M.} = C \times q'$$

Let the centroid of the compressive stress-strain diagram be at distance u from N.A.

$$\text{Then } u = q' - v.$$

Digitized by Google

Now this centroid is the same as the centre of pressure on a similar body subjected to fluid pressure, the N.A. being the water line. In this case it is easily shown that

$$u = \frac{\text{2nd Mt. of area above N.A. about N.A.}}{\text{1st Mt. of area above N.A. about N.A.}}$$

$$= \frac{\frac{b'x^3}{3} - \frac{(b'-b)f^3}{3}}{\frac{b'x^2}{2} - \frac{(b'-b)f^2}{2}} \qquad \ldots\ldots\ldots\ldots\ldots\ldots\ldots\ldots\ldots\ldots (24)$$

This enables us to find q'.

Many writers neglect the portion F E M of the stress diagram, but this does not make the calculation so very much easier, and so we will not do so.

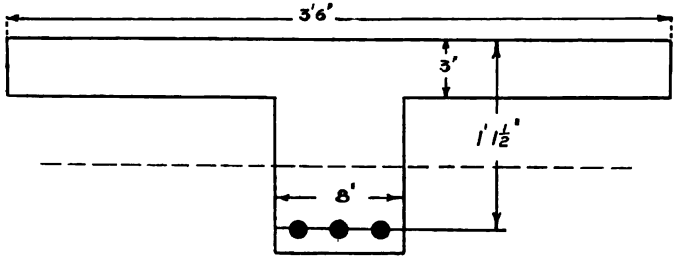

Fig. 205.

NUMERICAL EXAMPLE OF T BEAM.—Take the T beam of section shown in Fig. 205. In this case we will not assume the area of reinforcement (A_s) to be given, but will calculate it so as to give

$$f_c' = 500 \text{ lb. per sq. in.}$$
$$f_s = 10{,}000 \text{ lb. per sq. in.}$$
$$e = 15$$

Then we have $v = \frac{q}{1 \times e\frac{f_c'}{f_s}}$

$$= \frac{13{\cdot}5}{1 + \frac{15 \cdot 500}{10{,}000}} = 7{\cdot}72''$$

$$\therefore x = 13{\cdot}5 - 7{\cdot}72 = 5{\cdot}78''$$

Digitized by Google

$\therefore$ From equation (22)

$$10{,}000\ A_s = \frac{500}{2}\left\{5{\cdot}78 \times 42 - \frac{34 \times 2{\cdot}78^2}{5{\cdot}78}\right\}.$$

$$= \frac{500}{2}\left\{243 - 44{\cdot}4\right\}$$

$$\therefore A_s = \frac{\frac{500}{2} \cdot 198{\cdot}6}{10{,}000} = 4{\cdot}97 \text{ sq. in.}$$

$\therefore$ Adopt say 3 bars $1\frac{1}{2}$" diameter.

Then
$$u = \frac{42 \times 5{\cdot}78^2 - \frac{34 \cdot 2{\cdot}78^3}{3}}{42 \times 5{\cdot}78^2 - 34 \cdot 2{\cdot}78^2}$$

$$= 4{\cdot}31'' \text{ nearly}$$

$$\therefore \text{Safe B.M.} = f_s A_s . (4{\cdot}31 + 7{\cdot}72)$$

$$= \frac{10{,}000 \times 4{\cdot}97 \times 12{\cdot}03}{12} = 50{,}000 \text{ ft. lb. nearly.}$$

Shear Stresses and Adhesion in Reinforced Concrete Beams. —There has not been very much light shown up to the present on shearing stresses in reinforced concrete beams. From experimental work it may be taken as a general rule that adopting a safe shear stress of 75 lb. per sq. in. a beam of ordinary span and percentage reinforcement will be satisfactory as far as vertical shear goes.

The shear in the case of a reinforced concrete beam differs from that in the plate girder in the following respect. The plate girder has to be stiffened against buckling due to the compressive component of the shear, but in the reinforced beam we have to place bars, corresponding to the stiffeners, to take up the tensile component of the shear.

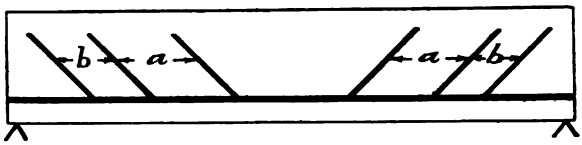

Fig. 206.—*Shear Reinforcement.*

Fig. 206 shows one way in which the shear stress is taken up, further examples are given in Figs. 209–214.

Digitized by Google

LONGITUDINAL SHEAR AND ADHESION.—Consider two vertical sections of a reinforced concrete beam made at points A, B, a short

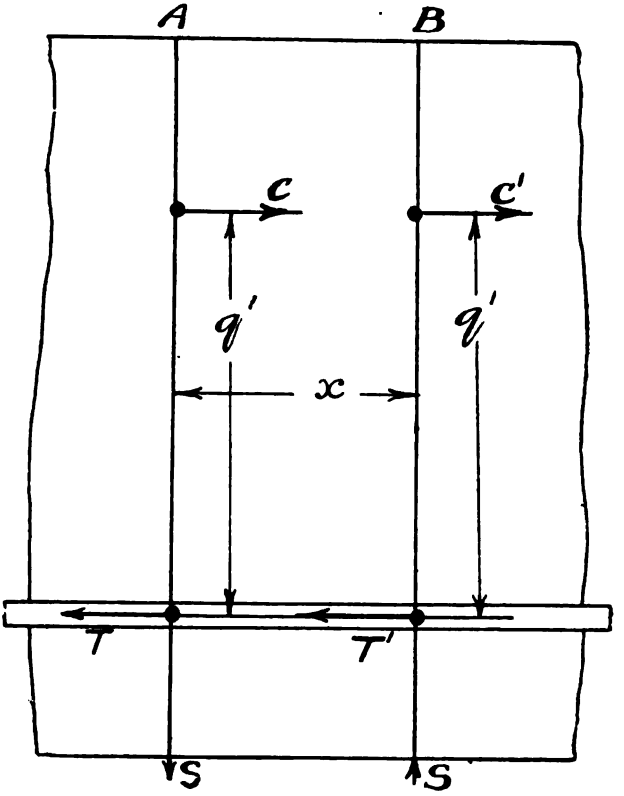

Fig. 207.—Shear Stresses in Reinforced Beams.

distance x apart (Fig. 207). At the point A the total stresses due to the B.M. are C and T, while at B they are C′ and T′.

$$\text{Now, } T = \frac{M_A}{q'}, \; T' = \frac{M_B}{q'}$$

$$\therefore T - T' = \frac{M_A - M_B}{q'}$$

$$\therefore \frac{T - T'}{x} = \frac{M_A - M_B}{x \cdot q'} = \frac{S}{q'}$$

Digitized by Google

S being the shearing force over the portion A B; it being remembered that x is small, and that therefore

$$S = \frac{M_A - M_B}{x}$$

but $\frac{T' - T}{x}$ is equal to the difference in the pull in the reinforcement for a unit length of the beam, and this is the force that tends to pull the reinforcement out of the concrete; or, in other words,

$$\frac{T' - T}{x} = \text{adhesive force per unit length of beam.}$$

Now let f_a = safe adhesive stress, and o the total perimeter of the reinforcement.

Then $f_a . o$ = safe adhesive force per unit strength.

i.e., S must not be greater than $f_a . o . q'$.

Now take the example worked on p. 451.

If the reinforcement consists of two round bars, $o = 8{\cdot}63$, q' was $8{\cdot}31$, S was $\frac{4560}{2} = 2280$.

$$\therefore f_a = \frac{2280}{8{\cdot}61 \times 8{\cdot}31} = 31{\cdot}9 \text{ lb. per sq. in.}$$

This is well within safe limits.

REINFORCED CONCRETE COLUMNS.

Short Columns Centrally Loaded.—We have shown on p. 442 that the safe load in a column in which buckling is negligible (the length being less than 15 times the least diameter) is

$$W = f_c' (A_c + e A_s) \quad \ldots\ldots\ldots\ldots\ldots\ldots (25)$$

Cross-binding of Reinforcement.—In addition to the longitudinal reinforcement, some form of binding is necessary to keep the bars at the requisite distance apart. This is due to the following reason:—

Suppose that a reinforced column with bars A B, C D, Fig. 208, be compressed; then, quite apart from any buckling of the whole column, the column will bulge out somewhat as shown, and the reinforcing bars will buckle because the value of $\frac{L}{k}$ or the

Digitized by Google

buckling factor for them will be large. If we bind the reinforcing bars together, as shown diagrammatically, so that they cannot buckle, the column will not bulge to anything like the same extent, and so will be considerably strengthened. From a large number of experiments M. Considère finds that the best results

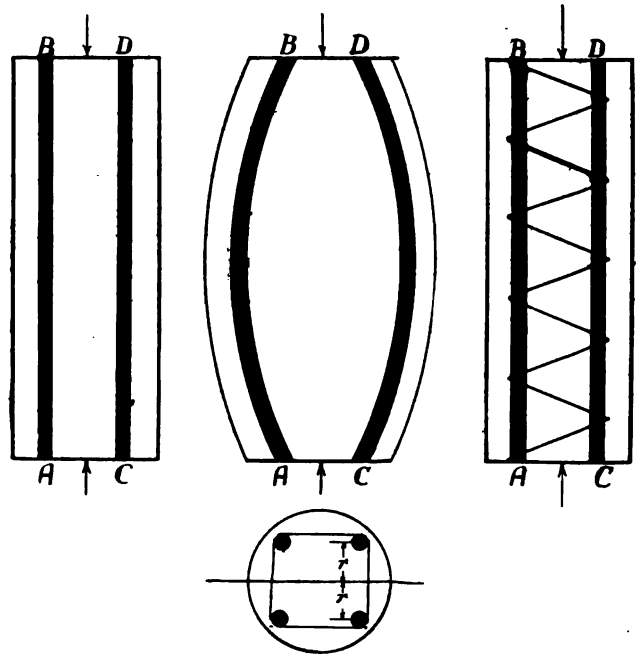

Fig. 208.—*Reinforced-concrete Columns.*

are obtained when spiral coils are placed round the reinforcing bars at distances apart equal to $\frac{1}{7}$ to $\frac{1}{10}$ of the diameter of the coil.

M. Considère suggests the following allowance for the coils in the strength of the column:—

Let A_h be the equivalent area of longitudinal reinforcement of the spiral coils $\left(i.e.,\ A_h = \frac{\text{volume of metal in coils}}{\text{length of column}}\right)$

Then safe load $= f_c' (A_c + e A_s + 2{\cdot}4\, e A_h)$ .....(26)

Digitized by Google

This recommendation is not, however, adopted in the R.I.B.A. Report.

Long Columns Centrally Loaded.—There has not been very much work done on long reinforced concrete columns.

Some authorities use Euler's formula applied to the homogeneous section:

$$\text{viz., Safe stress} = f_p = \frac{\pi^2 E}{5 c^2} \text{ (see p. 337)},$$

c being the buckling factor. In obtaining c the radius of gyration of the equivalent homogeneous section (see p. 80) is used,

$$i.e.,\ k = \sqrt{\frac{I}{A}}$$

where $A = A_c + e A_s$.

I = equivalent second moment

$= I' + (e - 1) A_s r^2$ for section shown in Fig. 208.

I' being the moment of the section apart from the reinforcement,

$$\left.\begin{aligned} I &= \frac{\pi D^4}{64} + (e - 1) A_s r^2 \text{ for circle} \\ &= \frac{b h^3}{12} + (e - 1) A_s r^2 \text{ for rectangle} \end{aligned}\right\} \quad \ldots\ldots\ldots\ldots (27)$$

Then safe load $= f_p + (A_c + e A_s)$.

Rankine's formula can also be used in the form

$$f_p = \frac{400^*}{1 + \frac{c^2}{8000}} \quad \ldots\ldots\ldots\ldots\ldots\ldots (28)$$

The value of c in terms of L and k for various methods of fixing the ends is given on p. 341.

Combined Direct Stress and Bending in Reinforced Concrete.—Let the line of pressure in a reinforced concrete structure cut the section at a distance of z from the equivalent centroid, the normal thrust being Q. Then the direct stress is $\frac{Q}{A}$ and the B.M. is $Q \cdot z$.

Now let A = equivalent homogeneous area

I = „ „ second moment

let x = distance from equivalent centroid to compression edge

y = „ „ „ „ „ tension „

* 500 should be used if 600 is used for bending.

Digitized by Google

Then combined compressive stress in concrete

$$= f_c' = \frac{Q}{A} + \frac{Q \cdot x \cdot z}{I} = Q\left(\frac{1}{A} + \frac{x \cdot z}{I}\right) \quad \text{.....(29)}$$

Combined tensile stress in concrete

$$= f_c = Q\left(\frac{x z}{I} - \frac{1}{A}\right) \quad \text{.....(30)}$$

A good many authorities prefer for structures such as arches, dams, retaining walls, chimneys, &c., to work by the above method, which is equivalent to the first method of calculating stresses in beams (p. 444).

For safe stresses f_c' and f_c may be taken as 500 and 100 lb per sq. in. respectively.

The values of I may be taken as given in equation (27) for squares and rectangles.

In other respects the calculation of the stability of reinforced concrete arches, dams, retaining walls, chimneys, &c., is the same as previously given.

Digitized by Google

EXAMPLES OF SOME LEADING SYSTEMS OF REINFORCED CONCRETE CONSTRUCTION.

Although our present scope prevents our dealing with the many practical problems involved in reinforced concrete construction, we will give a very brief account of some of the leading systems to give some idea of this form of construction.

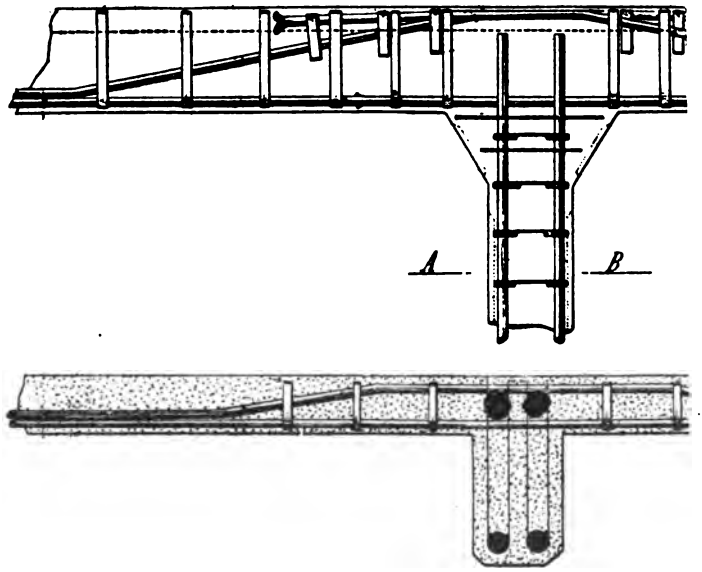

Fig. 209.—Hennebique System.

Hennebique System.—This system, which was one of the first to be introduced into this country on a large scale, was invented in 1892 by M. François Hennebique, a Belgian engineer and was largely extended by the late Mr. L. G. Mouchel.

Fig. 209 shows the application to beams and floor slabs. Round bars are used, some of the bars being extended upwards at the supports to take the reversed bending moment. The stirrups which are designed to take the shear form the crux of the system,

Digitized by Google

and are placed closer together at the ends of the span where the shear is greatest.

Coignet System—This system is illustrated in Figs. 210 to 211, and was invented by M. Edward Coignet, who was one of the first to publish investigations of the theoretical principles of the subject. In this system also round bars are used, and in the

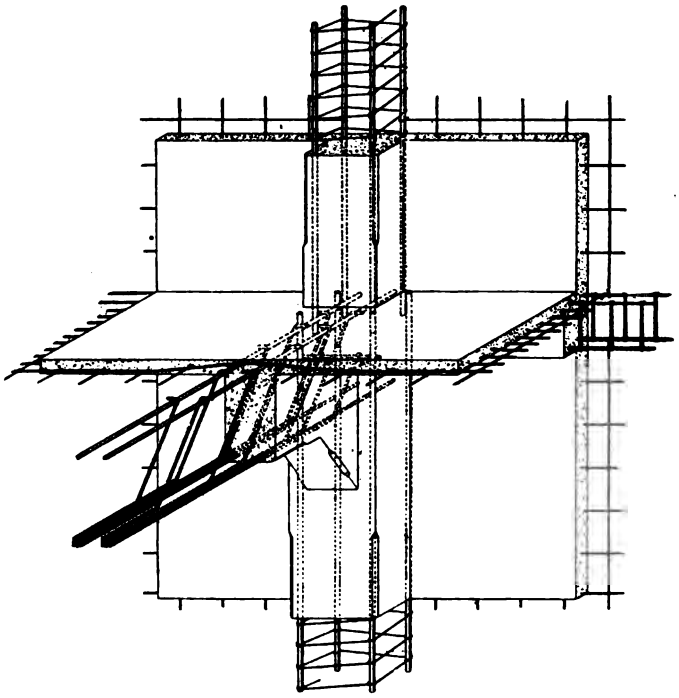

Fig. 210.—*Coignet System.*

main beams reinforcement is placed also on the compression side. This enables the skeleton construction to be first made and then transported, and also enables the main beams to be formed first and afterwards hoisted in place and the floor slabs then cast. Fig. 210*a* shows this clearly. Holes are left in the beams by means of which the wooden centering is supported. The stirrups in this system are of round bars $\frac{3}{16}$ in. to $\frac{1}{4}$ in. in diameter, the

Digitized by Google

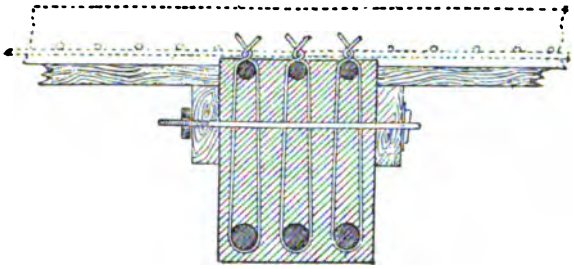

Fig. 210a.—Coignet Beam.

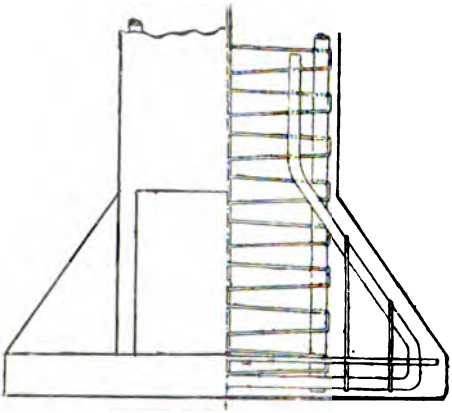

Fig. 210b.—Coignet Footing.

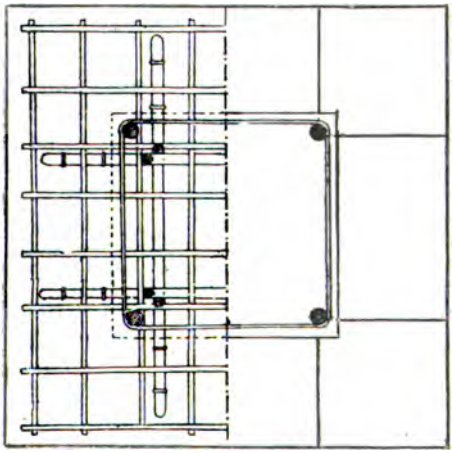

Fig. 211.—Plan of Coignet Footing.

Digitized by Google

ends being twisted or bent over the top bar; they are fixed by annealed wire to the principal bars.

Figs. 210*b*, 211, show a column footing designed according to this system.

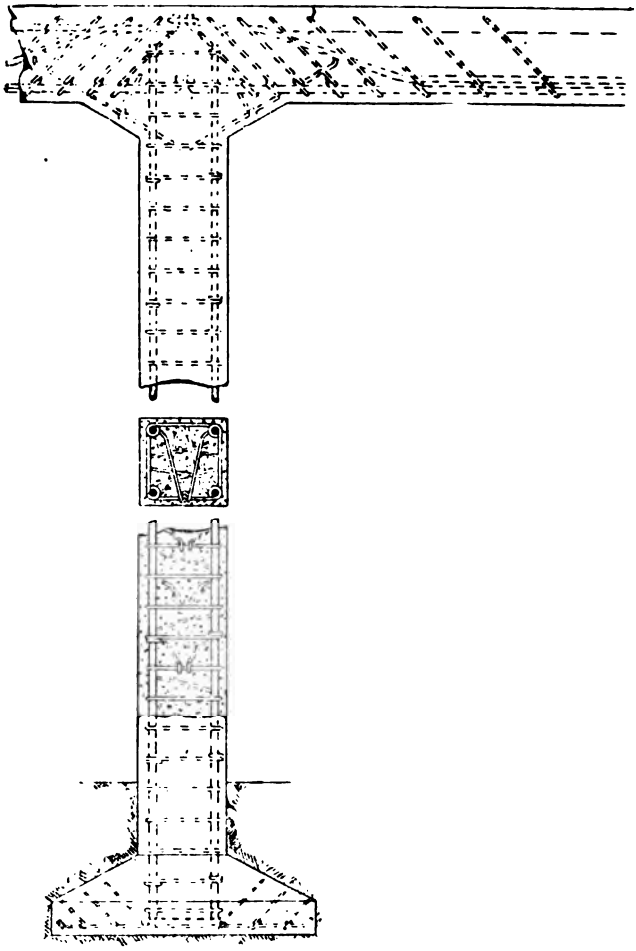

Fig. 211*a*.—*British Reinforced Concrete Engineering Company's System.*

Digitized by Google

British Reinforced Concrete Engineering Co., Ltd., System.—A column and main beam according to this system are shown in Fig. 211*a*. Round bars are used for the reinforcement and the shear members consist of small bars at 45° twisted round the main bars so as to grip them tightly, the ends being turned horizontally. The spiral reinforcement for the columns is bent round the vertical bars as shown, and is extended into the concrete core.

Kahn Trussed Bar System.—In this system a reinforcing bar of peculiar shape, shown in Fig. 212, is used. The bar con-

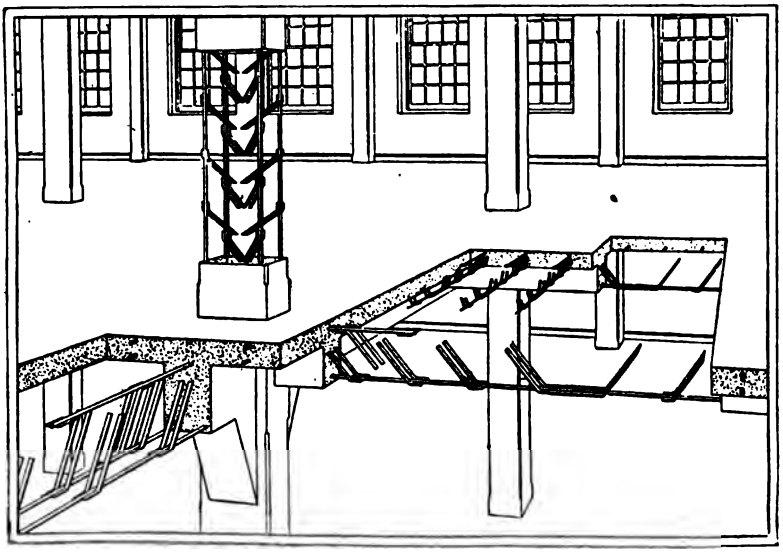

Fig. 212.—*Kahn System.*

sists of a diamond section core with two 'wings' which are slit longitudinally at intervals and bent up at 45° into stirrups, thus forming the shear members out of the one solid bar. The makers of this system contend that the shear reinforcement should be solidly fixed to the main reinforcement, and tests made of floor slabs with this system compared with those without such solid fixing

Digitized by Google

seem to indicate that their contention is correct. The arrangement of the bar is very ingenious; at the centre of the beam, where the bending moment is greatest, the 'wings' are kept solid with the core, thus giving a greater area of reinforcement. In columns, as shown, the bent stirrups are used to reinforce the core or centre of the column, and to prevent lateral bulging.

Indented Bar System.—According to this system rolled indented bars of the peculiar section shown in Fig 213 are used,

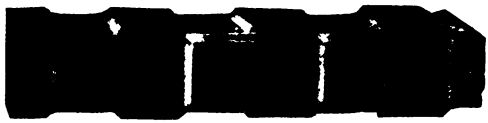

Fig. 213.—*Indented Bar.*

These bars form a mechanical key bond with the concrete and thus greatly increases the adhesion between steel and concrete. From some tests of beams reinforced according to this system,

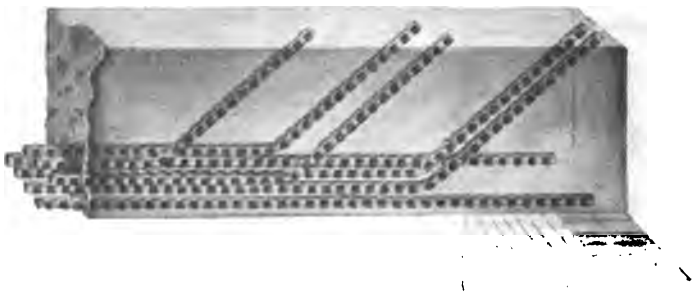

Fig. 214.—*Indented Bar System.*

which the author has seen, this key bond seems to be very effectual; in testing to destruction the concrete split longitudinally approximately along the line of reinforcement, and the impression of

Digitized by Google

the indented bar in the portion which split off was perfect, thus showing that no slipping had occurred.

As shown in Fig. 214, some of the bars are bent up at 45° towards the end of the beam to take shear stresses. This is very satisfactory because no metal is wasted and the length of the sloping bars is quite independent of the spacing, and there is a solid connection between shear and main reinforcement.

Further examples of reinforced concrete constructions used in conjunction with ordinary steel work to form fireproof flooring, &c., are given in Chapter XVI.

In the above treatment we have not attempted to deal with the many practical considerations such as centering, moulds, laying, &c., which must be gone into before a full grasp of the subject can be obtained. The above is intended as an introductory treatment to give general ideas, and to make the theory as clear as possible; for further information the reader should consult the current periodical literature dealing with it and the leading treatises, among which may be mentioned Marsh & Dunn's *Reinforced Concrete*, and Bull & Hill's *Reinforced Concrete Construction* (Constable & Co., London).

Digitized by Google

CHAPTER XVI.

DESIGN OF STEELWORK FOR BUILDINGS, &c.

Introductory.—In recent years the increase in the sizes and weights carried by buildings has led to the adoption of a building which is practically a steel framework encased with masonry. The design of such buildings has been carried out to a further extent in America than in this country, where the building regulations have considerably hindered their development; but although we have not in this country any steel-skeleton buildings of the magnitude of the American ones, steelwork now bears a very important part in buildings of appreciable size.

The steel skeleton of a building should be designed so as to safely carry the loads on the building, independently of the brickwork, the thickness of which will depend on the regulations of the local authorities.

Choice of Sizes and Shapes of Sections.—As we have pointed out in Chapter II., the better of two designs of equal strength is the one that *costs* less—not necessarily the one which has less material in it. Now the cost depends principally on the weight of materials, the cost of workmanship, including facility of erection, and on the facility of obtaining the materials required. It is much more costly to buy a few lengths of a number of differently-sized sections than a number of lengths of the same section, and it is much less expensive to purchase a section that is practically always kept in stock than one which, although listed, will have to be specially rolled and thus supplied with considerable delay. Thus we should endeavour as far as possible in our designs to use sections which can be supplied with little or no delay, and to use the same section for as many parts as is reasonably possible.

Ultra-practical men often cast doubts on the practical value of science, and base such doubts on the assumption that it is said to

Digitized by Google

be scientific to design, say, a small roof truss with every bar of a different section, the sizes being worked out to a thirty-second of an inch. It is not the science of designing which is at fault in such a case, but the designer who has only grasped one part of the science, and is lacking in that extremely valuable quantity, common-sense.

In special cases, such as in bridges of very large span where the dead weight of the structure is probably more than the loads to be carried, sections should be worked very close, but in most cases it is cheaper to use sections in common use.

As an example the following sizes can be taken as comparatively easily obtainable :—

T *Sections.*—All standard sections (given in appendix), but $4'' \times 5''$, $3'' \times 2\frac{1}{2}''$, $1\frac{1}{2}'' \times 2''$.

Equal L *Sections.*—All standard sections (given in appendix), but $8'' \times 8''$, $4\frac{1}{2}'' \times 4\frac{1}{2}''$..

Unequal L *Sections.*—$6'' \times 4''$, $6'' \times 3\frac{1}{2}''$, $5'' \times 4''$, $5'' \times 3''$, $4'' \times 3''$, $3'' \times 2''$.

Channel Sections.—$15'' \times 4''$, $12'' \times 3\frac{1}{2}''$ × 32·88 lb., $10'' \times 3\frac{1}{2}''$, $9'' \times 3''$, $8'' \times 3\frac{1}{2}''$, $7'' \times 3''$, $6'' \times 3''$.

Z *Sections* are not very much used, but their demand is increasing.

Flat Bars.—Even inch widths up to 16".

It must be borne in mind that the above figures are given as a guide only, and it must not be inferred that makers necessarily will not have other sizes in stock.

Length of Sections.—It is customary for the makers to charge extra for sections beyond certain lengths. The following may be taken as average values of the limiting lengths :—

Flat Bars	50 to 60 ft.
Angles and T*'s*	40 „ 50 „
I *Beams and Channels* ...	30 „ 35 „
Plates	35 ft. up to about 3 ft. wide.

Thickness of Plates.—The most common thicknesses are $\frac{3}{8}''$, $\frac{1}{2}''$, and $\frac{5}{8}''$, and where a thickness greater than this is required it is usually obtained by riveting together two plates, but for web plates $\frac{3}{4}''$ and $\frac{7}{8}''$ are not infrequently used. Thick-

Digitized by Google

nesses in odd thirty-seconds of an inch are usually avoided because they cause confusion in erection.

Finish of Steelwork.—It is quite commonly specified that the edges of flange plates shall be planed, but it is often better really to use flat bars instead of planed plates because the planing takes a good deal of time and often causes congestion in the workshop, and, moreover, the skin on the rolled bars keeps off oxidation better. If, as is often the case, the edges will not be seen when the structure is finished, there appears to be no need for such planing, but of course this does not apply to portions of plates and other sections which require to have a true bearing surface and must therefore be planed.

Loads on Buildings. DEAD LOADS.—These consist of the actual weight of walls, floors, tanks, and all permanent construction, and should be obtained as nearly as possible from the rough plans.

LIVE LOADS.—These may be designed for as follows, the figures being given as equivalent dead loads per sq. ft. of floor space.

Dwelling-houses, hotels, &c.	60 to 90 lb. per sq. ft.
Office buildings	80 „ 110 „ „
Theatres, churches, &c.	100 „ 150 „ „
Drill-halls and ball-rooms	140 „ 160 „ „
Stores, warehouses, and light factories...	100 „ 300 „ „
Heavy workshops	250 „ 450 „ „
Load distributed from roof	40 lb. per sq. ft.

Where a warehouse is for the storing of a definite cubic capacity of a special material such as grain, a special calculation should be made for the actual weight of it.

An American authority, Mr. C. C. Schneider, suggests also that in addition to the equivalent live loads, some provision should be made for isolated loads such as safes, and thus specifies that not only should the floor support uniform loads, obtained from some table such as given above, but every main floor-beam should be capable of sustaining an isolated load of 5000 lb.; this is not to be taken as an additional load, but the beam is to be designed for whichever gives the maximum bending moment.

Digitized by Google

The actual weights on three large office buildings in America were measured, and the maximum came at 40·2 lb. per sq. ft. Allowing for the fact that a considerable amount of this is a live load, our figure for the equivalent dead load appears to be quite satisfactory.

In designing the columns or stanchions for buildings of more than two stories high, it is common to reduce the live loads as follows:—For roof and top story live load to be calculated in full; for next lower story 5% reduction on live load; for next lower story 10% reduction, and so on until 50% reduction has been obtained, this reduction never being exceeded.

Columns, Caps, and Bases.—The working stresses for columns or stanchions are obtained as indicated in Chapter XII. In making such calculations the following points should be kept in mind.

(*a*) When the column carries a girder on one side only, or where the loads distributed from the girders on the two sides of the column are unequal, allowance should be made for the eccentricity of the load.

(*b*) Corner columns, *i.e.*, columns at the corners of buildings which carry girders in two directions at right angles only should be designed for eccentric loads.

(*c*) Columns which carry girders on each side on which traveller cranes run (see Fig. 208) should be designed for the case when only one crane is over the column. In such columns it should be remembered that if the traveller is braked suddenly it will cause a horizontal dragging force on the column. This dragging force may be taken as not more than ·2 of the weight of the traveller, together with one-eighth of weight carried. The dragging force for the crab moving transversely is often taken as one-half of the above.

(*d*) The end of a column can only be taken as fixed if it is fixed in two planes. Where it is fixed in one plane only as in the case of the columns supporting a gantry girder, it should be taken as fixed in direction but not in position, as shown in Case 5, p. 340.

Sections of Columns.—Built-up sections are used in most cases for mild-steel columns, especially for workshops, although

Digitized by Google

solid circular sections are used in some cases, and some authorities advocate their use; they are certainly useful when it is desirable to keep the outside dimensions of the columns as small as possible, as in the supporting of galleries in theatres. In recent practice, however, columns are avoided altogether under galleries by means of 'raking' beams and cantilevers, passing through or over main girders arranged across the building or across the corners.

Apart from questions of facility of delivery and of workmanship, the best section is that which *for the same area of cross section* has the greatest radius of gyration. It is very important to keep this in mind in designing.

It is commonly specified that no steel column shall have an unsupported length greater than 160 times its least radius of gyration, and no cast-iron column shall have an unsupported length greater than 80 times the least radius of gyration.

COLUMN SPLICES.—When it is necessary to splice a column, the area of the splicing plates and their disposition should be such that they are at least as strong as the section if imagined unspliced. The number of rivets should be such that the rivets will carry the load. Such splices should occur at or near the level of a girder.

COLUMN CAPS AND BASES.—The sizes of column caps depend on the size and form of the girders which they have to support. The number of rivets should be sufficient to safely carry the load from the girders to the columns. The size of the caps should be as small as possible to prevent eccentricity of loading. Figs. 215 (*a*) and (*b*) show typical examples of caps and bases for solid round and built-up sections. In the solid round sections the caps and bases are shrunk on, and intermediate connections are obtained by the aid of special castings or by means of steel plate clamps secured round the column, and fixed by pins or bolts.

The sizes of bases depend on the safe pressure for the pier or foundation to which they are fixed, or on which they rest. Safe pressures are given later.

In general practice the width of the base will vary from 2 to 3 times the width of the column, and the height of the gusset plates from $1\frac{1}{2}$ to 3 times the width of the column.

Digitized by Google

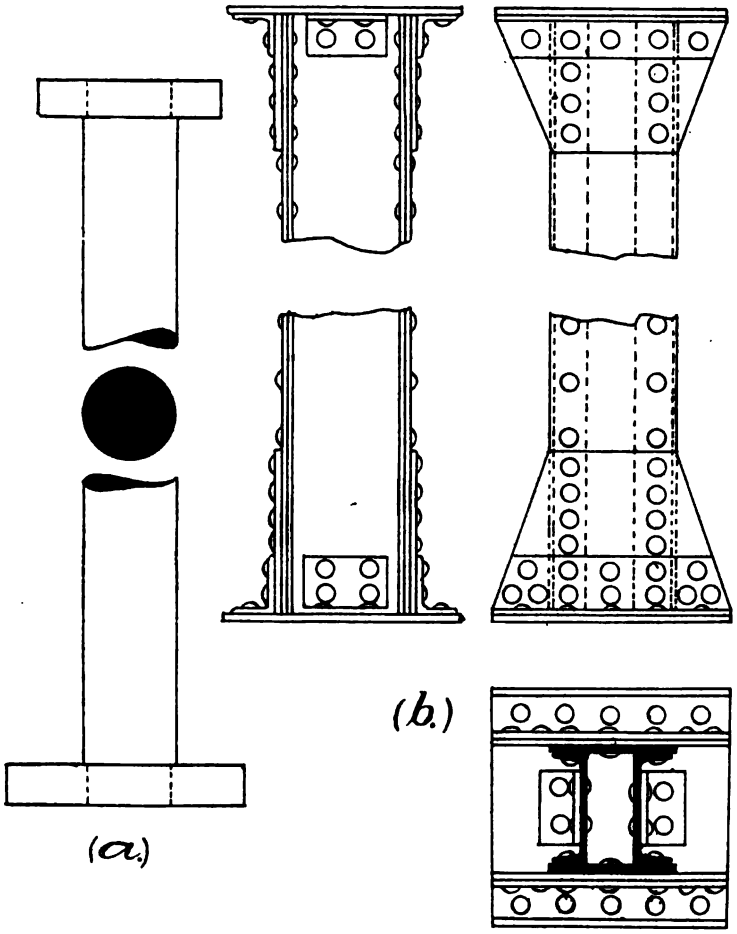

Fig. 215.—*Column, Caps, and Bases.*

In no case should the overhang of the base plate be so great that the overhanging portion, treated as a cantilever with a uniform load equal to the upward pressure on it, has a shear stress greater than 5 tons per sq. in., or a tensile stress greater

Digitized by Google

than 7 tons per sq in. Some authorities adopt the rule that the plate shall not project more than 8 times its thickness.

The number of rivets connecting the base plate to the column should be sufficient to carry the total load (see Example, p. 99).

Cast-iron bases are sometimes used under the steel bases to avoid very large size of the latter. Such bases should have a height equal to $\frac{1}{3}$ to $\frac{1}{2}$ of the greatest width, and a minimum thickness of metal equal to 1 inch.

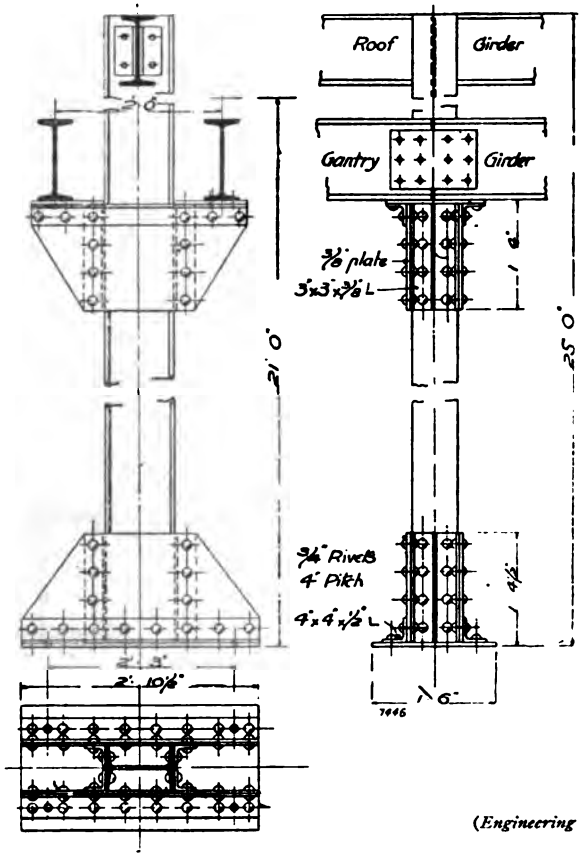

(*Engineering Review.*)

Fig. 218.—*Column for Workshop.*

Digitized by Google

Digitized by Google

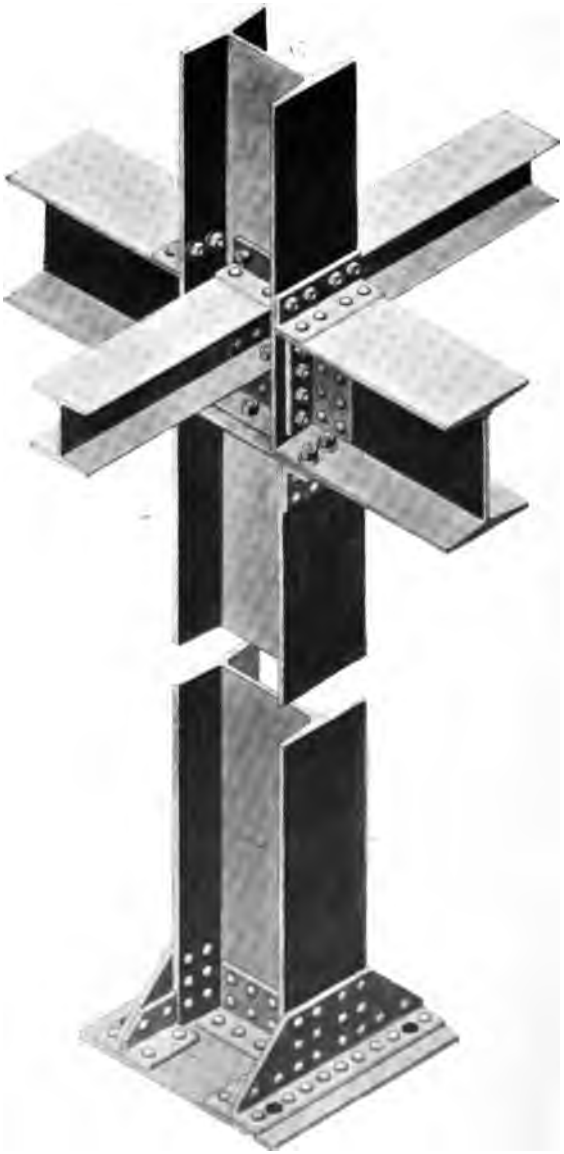

Fig. 216.—*Broad Flange Beams and Connections with Column.*

To face p. 477.

Digitized by Google

Examples of Columns from Practice.—Figs. 216–220 show examples of columns from practice, a perusal of which should make clear many points in the construction.

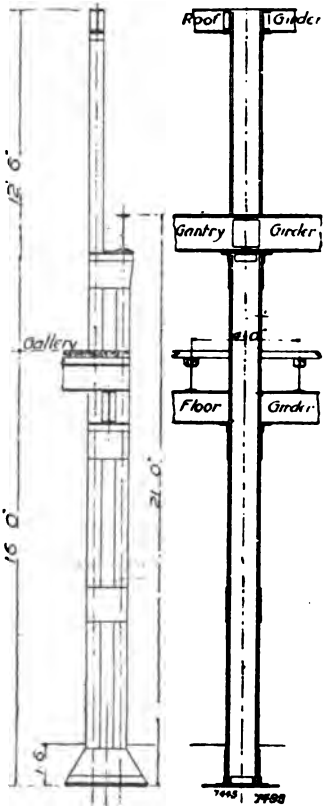

(*Engineering Review.*)

Fig. 219.—*Column for Workshop.*

Fig. 216 shows a typical cleated connection between columns and girders built up of 'broad-flange beams,' full particulars of which are given in an excellent handbook published by Messrs. H. J. Skelton & Co.*

* Handbook No. 10, *Structural Steel*, H. J. Skelton & Co., 71 Finsbury Pavement, E.C.

Digitized by Google

Fig. 217 shows steelwork for the Westminster Trust building, the steelwork being supplied by Messrs. Redpath, Brown, & Co., and Kleine Fireproof Floors being used.

Fig. 217*a* shows a typical view of column connection at the Ritz Hotel, London, taken during erection.

Figs. 218, 219 show typical columns for use in factories, a typical section of which is shown is Fig. 220. The right-hand side is specially designed with a view to possible extension at a later date.

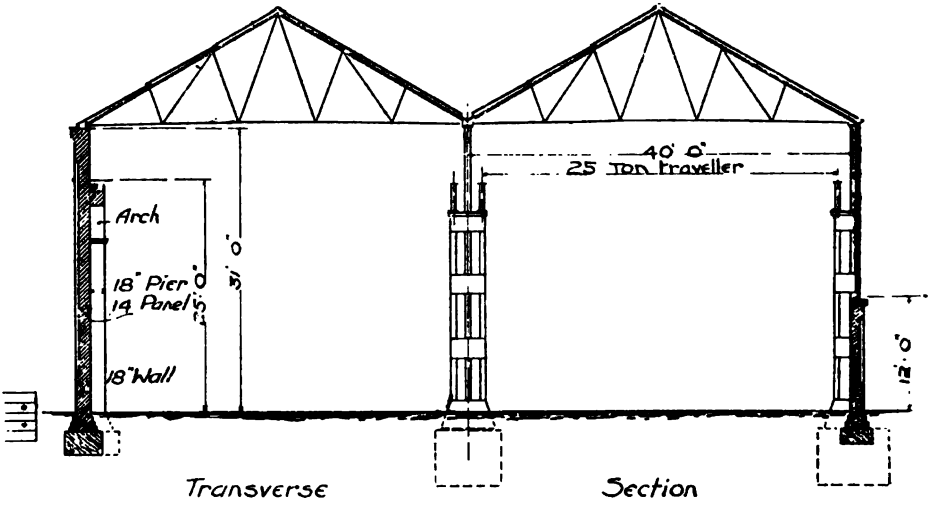

Fig. 220.—Typical Section through Workshop.

Foundations for Columns.—Very great care is required in the design of the foundations for columns and stanchions because the stability of the whole structure depends on the foundations, and so low stresses are used for foundations.

The foundations should always be designed so that the settlement is uniform, *i.e.*, the same working pressure per sq ft. should be used for all the column foundations of one building.

Safe Pressures on Foundations.—The following figures may be taken for the safe pressures on foundations in design. In an important case where no information can be obtained as to

Digitized by Google

Digitized by Google

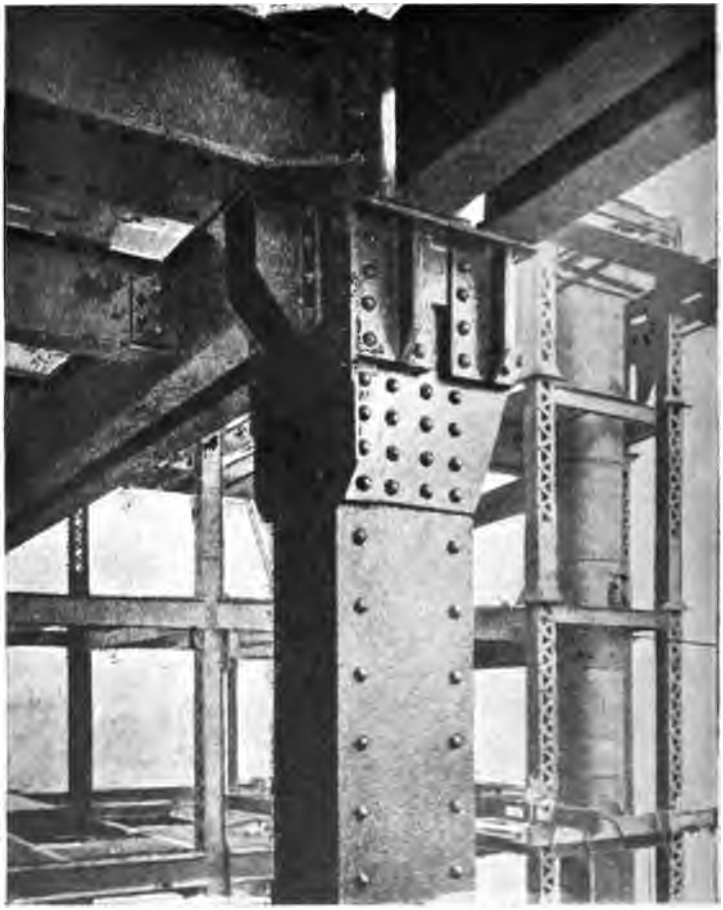

(*Builders' Journal.*)

Fig. 217a.—Steelwork for Ritz Hotel.

To face p. 479.

Digitized by Google

the bearing value of the soil in the vicinity, the maximum bearing pressure of the earth should be found by loading cylinders. A factor of safety of at least two should be allowed on such maximum pressures.

SOILS.—

Made ground...	½ ton per sq. ft.
Soft clay	1 „ „
Hard clay or loam	2 to 4 „ „
Dry, compact sand	2 „ 4 „ „
Dry, coarse gravel	4 „ 7 „ „
Soft, friable rock	3 „ 5 „ „
Ordinary rock	5 „ 15 „ „
Hard, compact rock	20 „ 30 „ „

PIERS AND TEMPLATES.—

	Tons per sq. ft.	Pounds per sq. in.
Granite	35 ...	550
Limestone	15 ...	250
Sandstone or Yorkstone ...	20 ...	300
Cement concrete, best (1 to 4)	15 ...	250
„ „ „ (1 to 6)	10 ...	160
Lime concrete (1 to 6) ..	2 to 4 ...	30 to 60
Brickwork in cement... ...	8 „ 12 ...	120 „ 180
Rubble masonry in cement ...	10 ...	160

Where the loads transmitted are not too large, the column bases may rest on concrete blocks, as indicated in Fig. 220, the area of which is determined from the safe pressure on the soil. The thickness or depth of the concrete should not be less than twice the projection of the block from the base plate of the stanchion, the minimum thickness being 12 inches.

The bottom of the foundation should be sufficiently deep to be beyond the influence of frost, &c., 3 feet being generally taken as satisfactory in this country.

The base plate of the stanchion is fixed to the concrete block by means of long bolts with large washers at the ends. Square tapered holes are left in the block of sufficient size to insert the washer, the holes being grouted with cement after the bolts are inserted. This allows some play in fixing the columns.

Digitized by Google

Brick Piers.—Brick piers are sometimes used when the weight is considerable and the foundation requires to be continued down to a considerable depth. Fig. 221 shows such a pier.

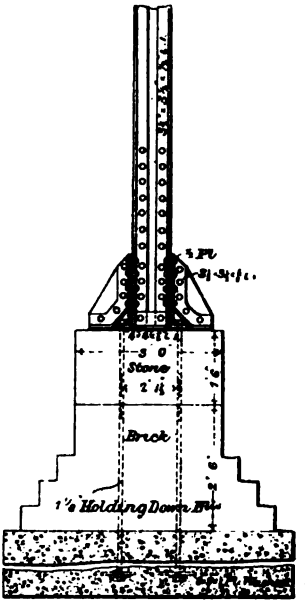

Fig. 221—*Brick Pier Foundation.*

The following rules may be taken for such piers:—

(1) The brick footings should project $2\frac{1}{4}$ ins. on each course, or shall have a batten of 1 in 2.

(2) The concrete should be not less than 12 ins. thick, or less than twice the projection of the concrete over the brickwork.

(3) The thickness of the stone cap or template should be not less than one-fourth of the length of its side, or less than $1\frac{1}{2}$ times the projection from the base plate.

NUMERICAL EXAMPLE.—*Suppose that the load to be transmitted is* 100 *tons.*

Then, adopting a safe pressure of 2 tons per sq. ft., we have area

Digitized by Google

Digitized by Google

Fig. 217.—Westminster Trust Building. (*Builders' Journal.*)

To face p. 481.

Digitized by Google

of base $= \frac{100}{2} = 50$ sq. ft., say 7 ft. square. If it is a Yorkstone cap, area of stanchion base plate $= \frac{100}{20} = 5$ sq. ft., say 2′ 3″ square.

Adopting 10 tons per sq. ft. for the brickwork in cement, we have area of cap $= \frac{100}{10} = 10$ sq. ft., say 3′ 3″ square. If we adopt 6 courses of brickwork, the base will be 3′ 3″ + 2 (6 × 2¼) = 3′ 3″ + 2′ 3″ = 5′ 6″, then a concrete base 7 ft. square and 18″ deep will be satisfactory, the the projection in this case being 9″.

Grillage Foundations.—This form of foundation is used for heavy loads on soils which will not bear heavy pressures, and where it is desirable to avoid great depth of excavation, especially in cases where a thin and compact stratum overlies one of more yielding nature. It was first used in America, and consists of two or more layers of **I** beams, or sometimes rails placed across each other, the space between the joists being well rammed with concrete. Fig. 222 shows a grillage designed for a load of 200 tons. Such grillages are designed according to the following rules:—

Maximum spacing of beams 18″ centre line to centre line.

Minimum „ „ 3″ between flanges to allow sufficient room for ramming concrete.

Cast-iron separators to be placed 4′ to 5′ apart.

The beams are designed by obtaining the bending moment in the following manner:—

Let L be the length of the beams in any layer, and let n be their number and P the total load transmitted by the column, and let y be the amount of overhang.

Then, treating the overhanging ends as cantilevers subjected to an upward uniform load, we have

$$\text{Max. B.M.} = \frac{p y^2}{2} = \frac{P}{n L} \cdot \frac{y^2}{2}$$

n will have been previously decided upon from the rules given above.

In designing these grillage beams it must be especially remembered that for short spans shear is relatively more important, and

Digitized by Google

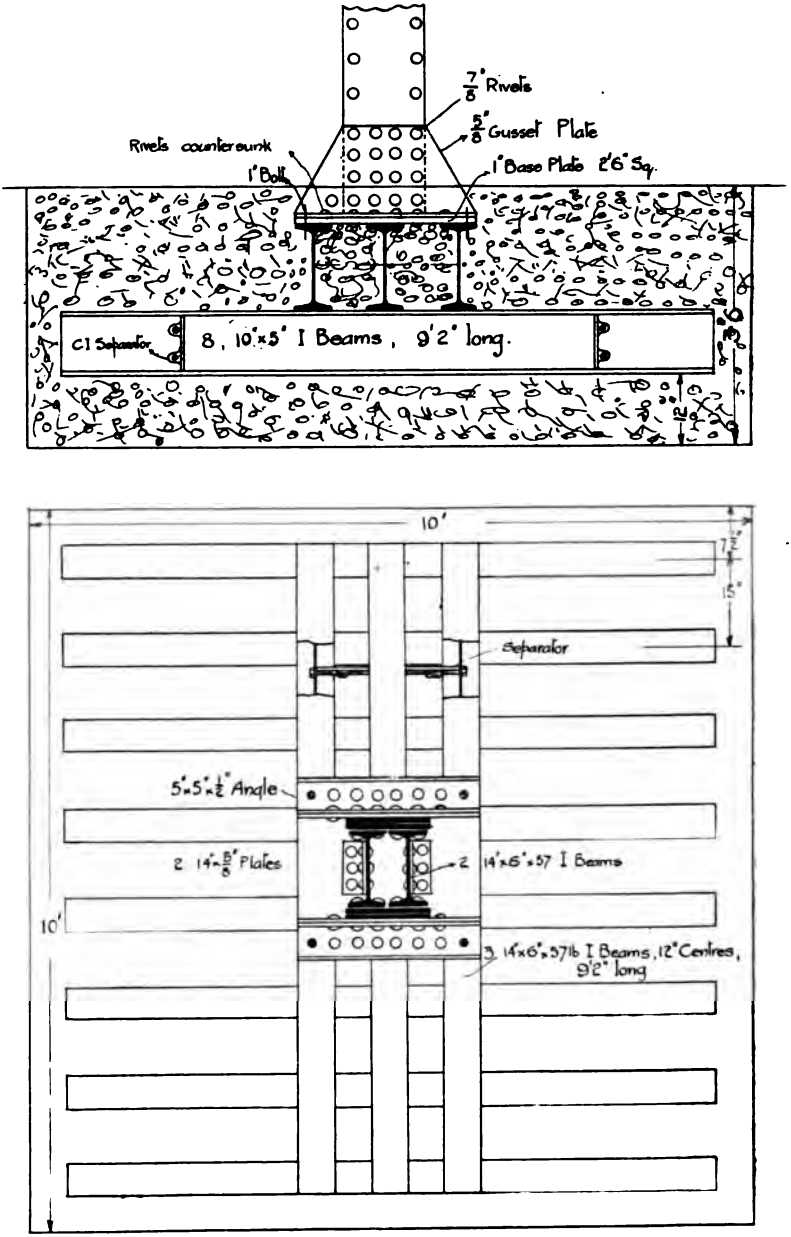

Fig. 222.—Grillage Foundation.

Digitized by Google

so care should be taken to see that the shearing force is not too large or the web may buckle.

For very heavy loads cast-iron bases are placed between the steel base and the grillage.

COMBINED GRILLAGES.—Sometimes two or more columns are supported upon the same grillage, this often saving room in one direction from the columns. In such a case the centre of gravity of the grillage must coincide with the centre of gravity of the loads or the pressure will not be uniform.

Pile Foundations.—In some cases piles are driven into the ground over the whole foundation. The ends are cut off

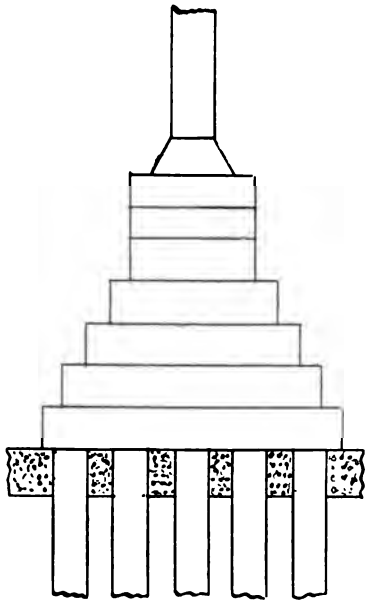

Fig. 223.—Pile Foundation.

level and embedded in cement, or covered with a timber raft. Fig. 223 shows such a foundation.

The safe pressure on such piles depends on the driving of them, and many formulæ have been given. Among them are :

Digitized by Google

(1) Major Saunders :

$$P = \frac{W h}{8 d}$$

P = safe load on each pile
W = weight of monkey used in driving
h = fall „ in inches
d = distance driven by last blow in inches.

(2) *Engineering News :*

$$P = \frac{W h}{6 (d + 1)}$$

Caisson Foundations are used for very heavy loads where a foundation on bed-rock is desired. In one form steel cylinders

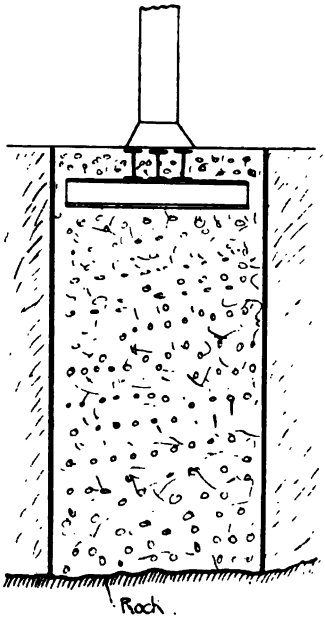

Fig. 224.—Caisson Foundation.

$\frac{3}{8}$ in. thick, 6–10 ft. diameter, and in 3 ft. lengths, are pressed down to the bed-rock by weighting. The first section is provided with a cutting edge, and water is pumped in to assist its move-

Digitized by Google

ment. The central core is then excavated and filled with concrete or brick. Fig. 224 indicates such a foundation.

Cantilever Foundations.—This form of foundation is used where it is inadvisable to undermine existing walls in adjoining property, and where the exterior columns cannot be located on the centre of the wall or wall footings. Fig. 225 shows one form of cantilever foundation. The exterior column is fixed to a cantilever girder, to the other end of which is fixed an interior

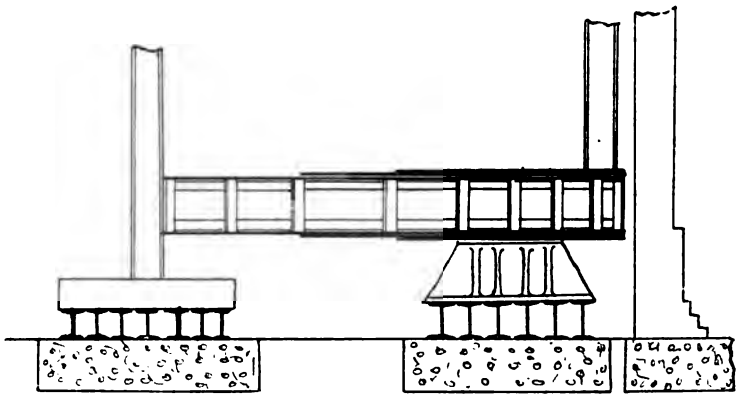

Fig. 225.—Cantilever Foundation.

column. The girder abutment is then provided with a foundation as shown.

Eccentric Loading in Foundations.—If the line of pressure or resultant thrust of the column does not come down the centre line of the foundation, allowance must be made for the resultant inequality of pressure. This may be done exactly as described for masonry structures (see Chapter XIV.).

Some very useful information on the design of foundations from American practice will be found in Freitag's *Architectural Engineering* (Wiley & Sons, New York).

Transverse Bracing of Columns.—In order to give lateral stability of the steel skeleton against horizontal forces such as wind, bracing is often used in tall buildings. In ordinary buildings, if the connecting beams are not too shallow, and if they

Digitized by Google

are well secured to the columns, no such bracing is necessary, but in very tall buildings, where the area of ground plan is comparatively small, such bracing is necessary. Such bracing is usually of one of the following kinds :--

(*a*) SWAY BRACING.—This consists of pin-jointed rods placed diagonally between the columns (Fig. 226), the whole thus acting as a vertical lattice cantilever.

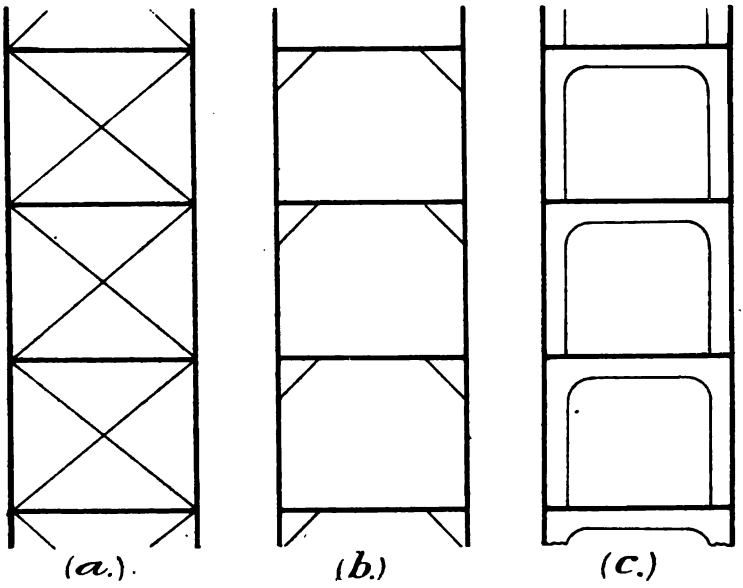

Fig. 226.—Transverse Bracing for Buildings.

(*b*) KNEE BRACING, OR TRIANGULAR GUSSET PLATES.—These are as shown in the sketch, Fig. 226. The gusset plate may be looked upon as knee bracing with a solid web. The stresses in knee bracing can be obtained by moments as indicated on p. 315.

(*c*) ARCH PORTALS.—This is a very rigid form of construction, and is considerably more expensive than those previously mentioned. An arch portal is fitted in every panel of the frame as indicated in the figure.

Digitized by Google

GIRDERS FOR BUILDINGS.

The design of girders generally is dealt with in Chapter XVIII. In buildings the heavier girders are usually built up of channels or I beams and plates such as shown in Fig. 227, and the calculations for such girders present no difficulties. The moment of inertia of the section is found in inch units, as described on pp. 86, 87, and from this the modulus of the section (Z) is readily obtained. Then we have :—

$$\text{Max. B.M. in ft. tons} = \frac{7\,Z}{12},$$

7 being the safe working static stress for mild steel in tons per sq. in., and the 12 being used because the B.M. is in ft. tons.

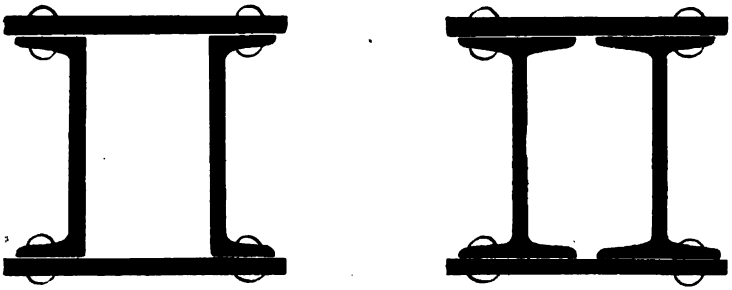

Fig. 227.

If the load is uniformly distributed and equal to W tons and the span is L feet,

$$\text{Max. B.M.} = \frac{W\,L}{8}$$

$$\therefore \frac{W\,L}{8} = \frac{7\,Z}{12}$$

$$\therefore Z = \frac{3\,W\,L}{14}$$

This gives the necessary modulus of a section in inch units to carry a uniform load of W tons on a span of L feet.

Most makers' section books publish the moduli and safe loads for different spans of various built-up girders.

Digitized by Google

Depth of Girders and Deflection.—The depths of girders for buildings should be such that the deflection does not exceed $\frac{1}{2\frac{1}{8}}$ in. per ft. of span or $\frac{1}{300}$ span.

For a uniform load we have proved (p. 205) that

$$\delta = \frac{5\,W\,L^3}{380\,E\,I} \quad \ldots\ldots\ldots\ldots\ldots\ldots\ldots\ldots\ldots\ldots (1)$$

Now the stress $f = \frac{M\,d}{I}$, where d is the half depth, assuming the girder to be symmetrical

$$\therefore f = \frac{M\,D}{2\,I} \text{ where D is the total depth} \quad \ldots\ldots (2)$$

$$\text{And } M = \frac{W\,L}{8}$$

$$\therefore f = \frac{W\,L\,D}{16\,I} \quad \ldots\ldots\ldots\ldots\ldots\ldots\ldots\ldots (3)$$

$$\therefore \delta = \frac{5\,.\,L^2}{24\,.\,E}\left(\frac{W\,L}{16\,I}\right)$$

$$= \frac{5\,.\,L^2\,.\,f}{24\,.\,E\,.\,D}$$

Taking $f = 7$ tons per sq. in.; E = 13,000, and measuring L in feet and D in inches, this gives the deflection in inches.

$$\delta = \frac{\cdot 01615\,L^2}{D} \quad \ldots\ldots\ldots\ldots\ldots\ldots\ldots\ldots (4)$$

The common rule is that if the depth is not less than $\frac{1}{20}$ span, the deflection will not be excessive. If this value be put in equation (4), remembering that D is in inches, we get $\delta = \cdot 0267$ L, or bringing the deflection to feet $\delta = \cdot 0022$ L; this is less than $\frac{1}{300}$ span, and so the rule is satisfactory.

Fixing of Ends of Girders.—Although the girders are connected to the columns by means of cleat connections, tables, &c., for which are given on pp. 102–104, such connections are not sufficient for the beams to be designed as for fixed ends. A note on this is to be found on p. 243. Such cleated connections will tend to lessen the deflection, and the deflection will be somewhere between $\frac{1\,W\,L^3}{384\,E\,I}$ and $\frac{5\,W\,L^3}{384\,E\,I}$.

Camber.—An upward initial deflection or camber is usually given to girders to prevent the deflected appearance when deflected. Such camber may be taken as $\frac{1}{4}$ in. for every 10 ft. of span.

Digitized by Google

Separators for Compound I Girders.—Where two or more I beams are placed side by side to form a compound girder, cast-iron separators are placed at every 4 or 5 ft., and where

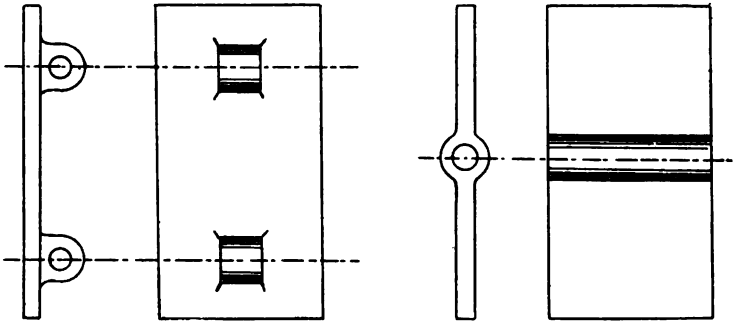

Fig. 228.—Cast-iron Separator for Girders.

isolated loads occur; such separators are usually of the form shown in Fig. 228, while for beams less than 6 ins. high, distance pieces of 1" gas tubing may be used instead.

Girders Let into Walls.—When girders are let into walls and act as bressummers such as over a shop front, it is common to allow the bonding in the brickwork to take some of the load,

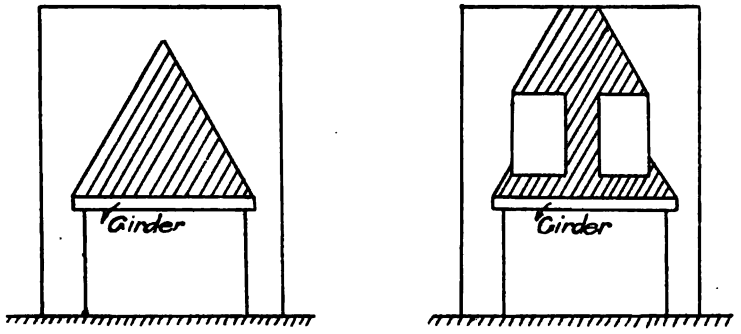

Fig. 229.—Girders Supporting Brickwork.

and for the girder to be assumed to carry the weight of brickwork enclosed in an equilateral triangle with the span as base. Where windows occur the triangle is drawn out as indicated in Fig. 229.

Digitized by Google

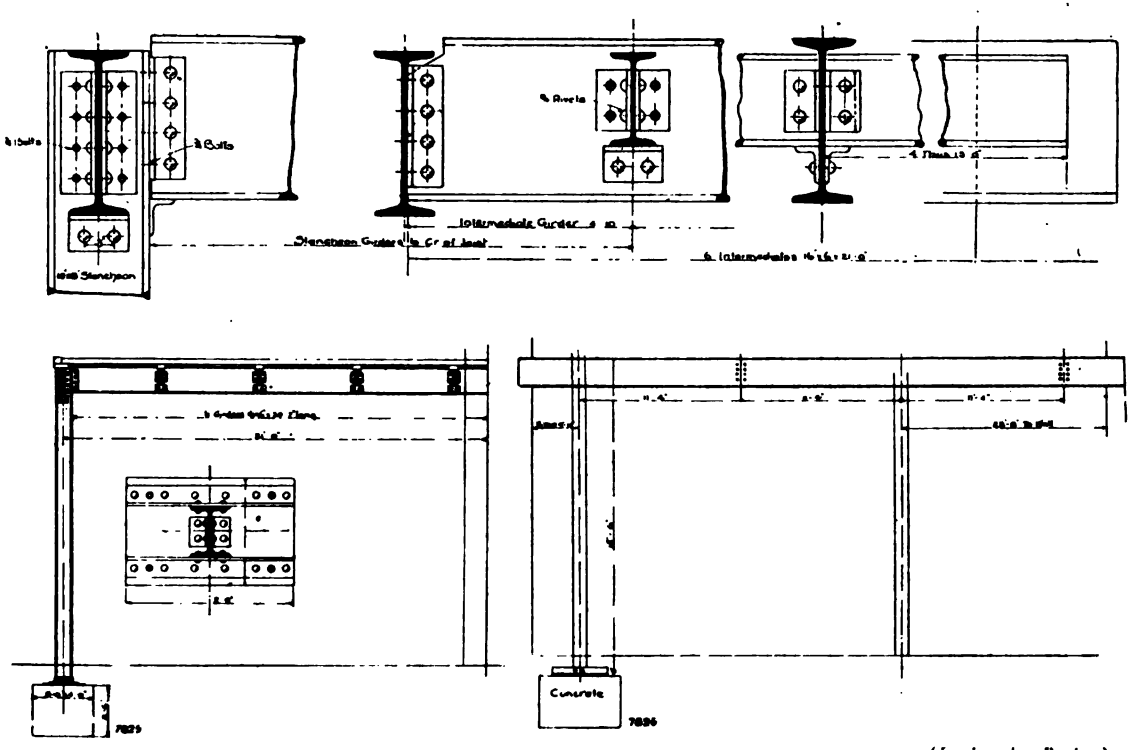

Fig. 230.—Girders for Workshop Gallery.

(*Engineering Review.*)

Digitized by Google

Girders for Workshops and Factories. — Fig. 230 shows details of girder work for a workshop gallery. The gallery is 170 ft. long and 20 ft. wide, and is carried by six columns and a line of 16 in. by 6 in. rolled I beams extend from column to column the full length of the shop. At each column there is a similar beam running at right angles, of which one end is supported by the column and the other end built into the wall. The flooring joists are carried on these beams, and on intermediate beams supported

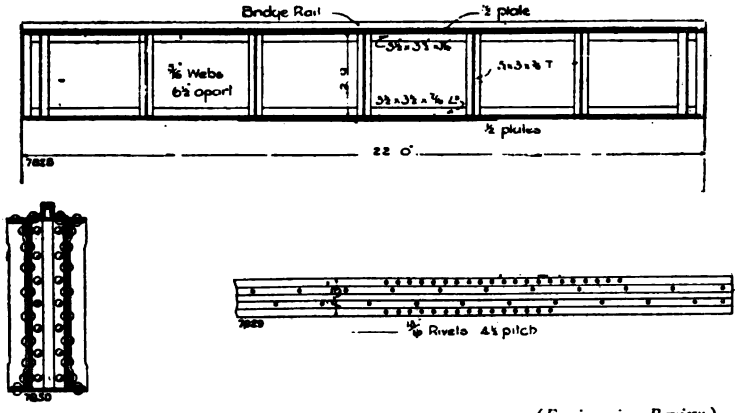

(*Engineering Review.*)

Fig. 231.—*Gantry Girder.*

by the longitudinals, the beams being at different levels to save notching of the joists. On each joist a wooden sleeper, $4\frac{1}{2}$ in. by 3 in. is fixed by means of coach screws through holes in the top flanges, arranged zig-zag about 3 ft. apart, and 3 in. flooring boards are nailed to these sleepers.

Fig. 231 shows a gantry girder, designed to carry a 45-ton traveller over a span of 22 ft. between centre of columns. The girder is of box section, the webs being $\frac{5}{16}$ in. thick, and placed about $6\frac{1}{2}$ in. apart, the depth of the girder is 5 ins., and the flange plates are $\frac{1}{2}$ in. thick, 5 ins. × 3 ins. × $\frac{3}{8}$ in; T stiffeners being placed about 4 ft. 3 ins. apart.

Fig. 232 shows a gantry girder made of an I beam trussed by round rods connected to flat iron struts, the rods having consider-

Digitized by Google

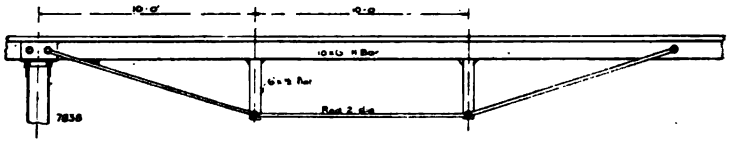

FIG. 3

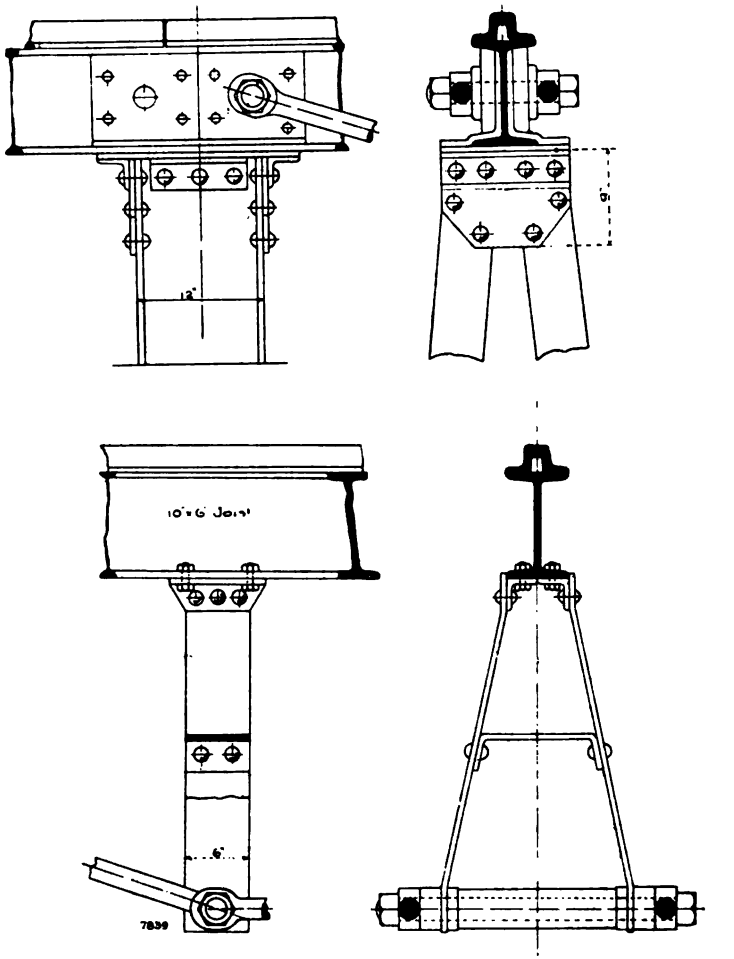

(*Engineering Review.*)

Fig. 232.—Trussed Gantry Girder.

Digitized by Google

able spread under the middle of the beam to prevent lateral vibration. Such girders may be used for comparatively large spans with light loads.

Gantry girders should be designed so as to carry the horizontal force due to braking of the cranes in cross travel.

Roof girders are provided to carry the roof trusses between the main columns; such girders should be placed between the columns and not on top of them.

FIREPROOF CONSTRUCTION.

A very good paper on the fire-resisting qualities of materials will be found by Webster, in Vol. CV. *Proc. Inst. C.E.*

STEELWORK, when unprotected, gets twisted up hopelessly in a fire, the secondary stresses causing the distortion when the steel gets into a comparatively plastic condition.

BRICKWORK resists fire and quenching much better than stone, which crumbles away, due to the combined effect of fire and water.

TERRA-COTTA is a very good fire-resisting material, and is used largely in America, but its price is almost prohibitive for ordinary work.

CONCRETE is a very good fire-resisting material, especially when reinforced with steel, and the ease with which it can be worked makes it a very useful material for encasing steelwork.

Coke breeze concrete is used by many authorities on account of its not cracking so readily, the objection that it forms a means of conflagration not apparently being a serious one in practice.

Fireproof Floors.—The following are some of the leading fireproof flooor systems used in this country. They are to be distinguished from reinforced concrete systems proper (see pp. 463–469), from the fact that they form only slabs between the beams, and the whole structure is not calculated as a monolithic one in which the steel and concrete play their respective parts.

EXPANDED METAL SYSTEM.—Expanded metal is made from sheets of rolled steel of various thicknesses, and is slit in staggered fashion and distended, the resulting 'expanded metal' resembling trellice work. It has, owing to its form, a very good bond with

Digitized by Google

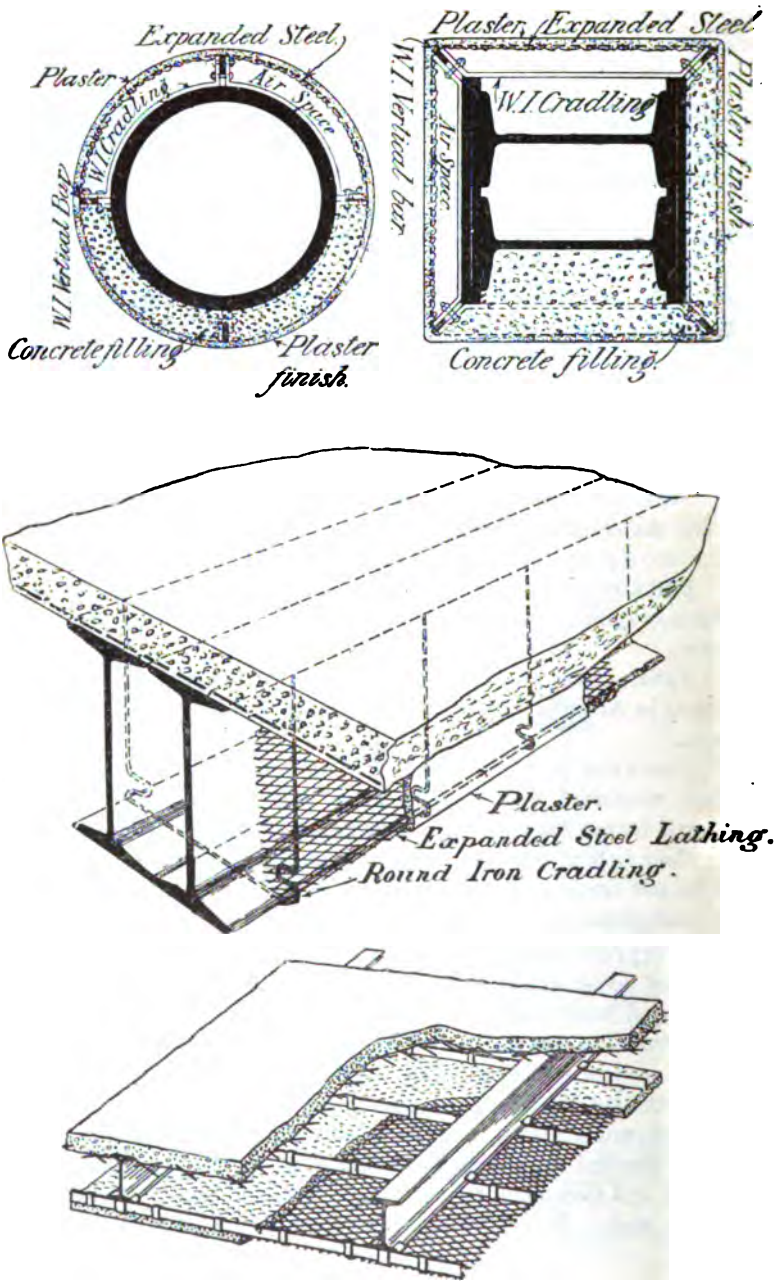

Fig. 233.—Expanded Metal Fireproofing Construction.

Digitized by Google

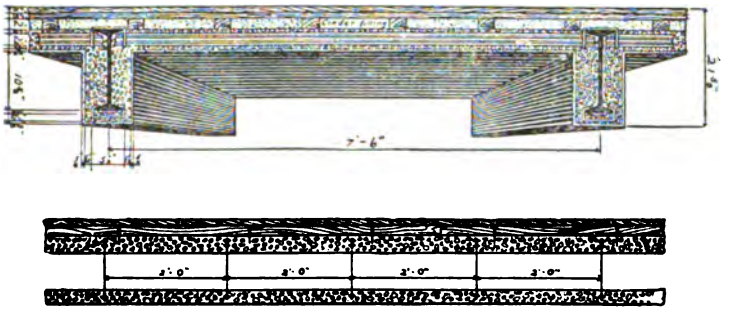

Fig. 234.—Columbian Fireproofing System.

Digitized by Google

concrete, and is used as a reinforcement or skeleton for the concrete in fireproofing work. Fig. 233 shows the application of this system to some cases. Expanded metal may also be used as the reinforcement in reinforced concrete proper, but it is usually used in connection with ordinary steelwork to form floors, &c.

COLUMBIAN FIREPROOFING COMPANY'S SYSTEM.—According to this system, ribbed bars, such as shown in Fig. 234, are suspended between the main beams by means of sheet-metal stirrups with suitable holes punched in them as shown. Concrete is then rammed round these bars to form the floor slabs. To protect the lower flanges of the beams, concrete slabs are made with sheet-metal anchor pieces projecting from them, and these anchor pieces are then bent round the flanges as shown. The ribbed bars may be used for the reinforcement in reinforced concrete proper.

U.K. FIREPROOFING COMPANY'S SYSTEM.—According to this system, one form of which is shown in Fig. 235, reinforced in-

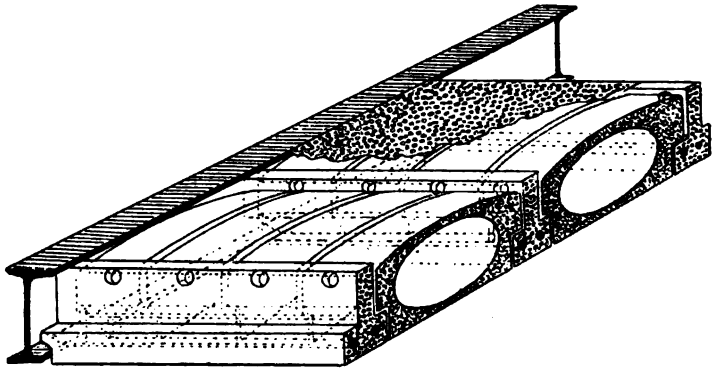

Fig. 235.—'U. K.' Fireproof Floor.

verted T beams are suspended between the main joists as shown, such beams being cast in moulds and hoisted into place. Hollow slabs of the form shown are then cast, and placed as shown between the T beams, and a concrete filling is spread over the top and well tamped. As no centering is required in this system, the construction can be effected very rapidly, and the floors are ready for immediate use.

Digitized by Google

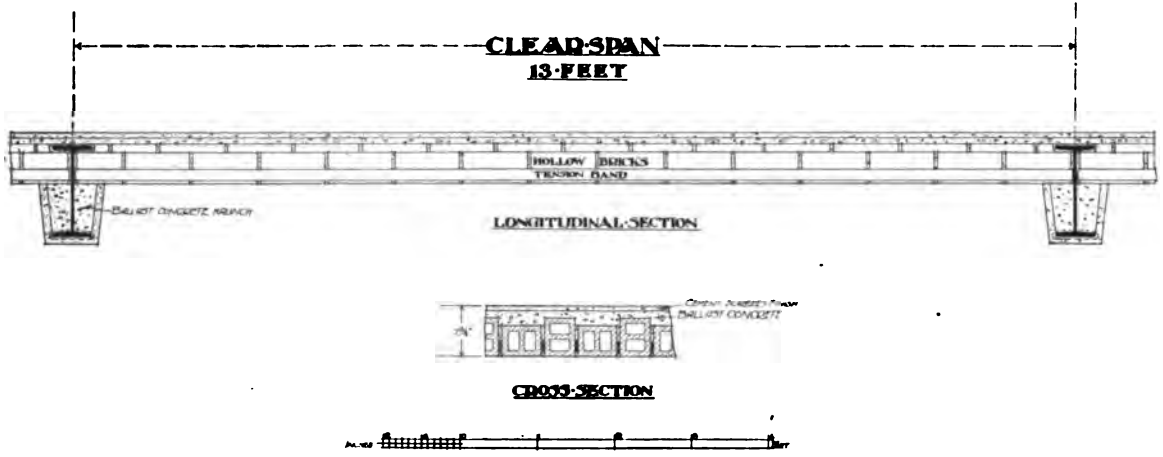

Fig. 236.—Kleine Fireproof Floor.

Digitized by Google

KLEINE SYSTEM—.According to this system, hollow terra-cotta blocks or solid bricks are placed between the main beams with reinforcement of steel bands embedded in the mortar, as shown in Fig. 236. In the form shown, ballast concrete is deposited upon the bricks, which are placed alternately flat and on edge. In this system the centering is simple, and can be removed after a few days, the brick soffit then being ready for immediate plastering.

In addition to the above special systems, fireproof floors are often constructed with small I cross beams placed at about 1′ 6″ to 3′ 0″ centres between main beams, and concrete then rammed between them. This is apt to be expensive, however, because the steel is used in compression as well as in tension, T bars being better in this respect for the cross beams. A very old but very good construction for heavy floors is obtained by placing the main beams at 6 to 10 ft. centres, and making a concrete arch between them similar to the 'jack-arch' shown in Fig. 255.

Digitized by Google

CHAPTER XVII.

DESIGN OF ROOFS.

We have seen in the previous chapters, in particular Chap. XI., how the stresses in roof trusses are obtained. Assuming that the stresses are known, the necessary scantlings or sizes of the members are easily obtained; the ties being given such area that the net area times the working stress is equal to the total stress carried, and the struts being given such area that the area times the working stress obtained from buckling formulæ is equal to the total stress carried. The net area in the case of ties is the area of the bar minus the area of the rivets in it.

Care should be taken in the design of roofs that the centre line of the actual sections adopted agrees as far as possible with the frame diagram for which the stresses were obtained, and that that there are no eccentric stresses.

Eye and fork ends were formerly used with round ties, but they are being superseded by flat ties with gusset plate connections, such connections being considerably more economical, as they require no smith's work. As we have already pointed out in Chap. XVI. as many bars as reasonably possible should be of the same section.

Weights of Roof Coverings.

	lb. per sq. ft.
Lead covering...	5·5 to 8·5
Zinc „ (14 to 16 zinc gauge) ...	1·5 to 1·75
Corrugated iron, 16 B.W.G.	3·5
Slates	8 to 10
Tiles	12 to 18
Slate battens	2
Boarding, $\frac{3}{4}$ in. thick	2·5
„ 1 in. „	3·5
Glazing, $\frac{1}{4}$ in. plate	5

Digitized by Google

WEIGHT OF SNOW may be taken as 4 to 5 lb. per sq. ft., but many authorities do not allow for this in this country on the assumption that snow and wind cannot act at the same time.

WEIGHT OF ROOF TRUSSES.—The following formulæ have been given for the weights of roof trusses.

Steel Trusses:

Weight of truss $= \frac{S}{32{,}000}$ tons per sq. ft. covered (Anglin).

$= \frac{3}{4}\left(1 + \frac{S}{10}\right)$ lb. „ „ (Merriman).

$= \frac{S}{25} + 4$ lb. „ „ (Johnson, Bryan, and Turneare).

Wood Trusses:

$\frac{1}{2}\left(1 + \frac{S}{10}\right)$ lb. „ „ (Merriman).

For small spans up to 40 ft. it is common to design roof trusses for an equivalent vertical load of 40 lb. per sq. ft. of ground plan covered, such load including the wind pressure.

Types of Roof Trusses.—Fig. 237 shows the most common forms of roof trusses, and in Figs. 238–242 detail designs for some of such trusses are given. With regard to the names by which the trusses are known, the only reliable ones are really those descriptive of the construction, *e.g.*, right-angle strut, the other names not being used consistently.

The queen-post truss shown is unsuitable for steelwork because it is 'deficient.' An additional diagonal bar in the centre bay is necessary for use in steelwork.

The rise of the truss is usually from $\frac{1}{4}$ to $\frac{1}{8}$ of the span, and when the tie-rod is cambered, such camber is usually $\frac{1}{30}$ to $\frac{1}{40}$ of the span.

In all the designs given, gusset plates and flats are used, there being no fork and eye bars.

The most common section for the rafter is T, or two angles back to back at a short distance apart.

The constructions should be quite clear from the figures.

Fig. 243 shows details of points of small trusses.

A is a very economical form of shoe.

B is a connection between a tie bar and two diagonals.

C is a gusseted joint between two portions of the tie bar and two diagonals.

Digitized by Google

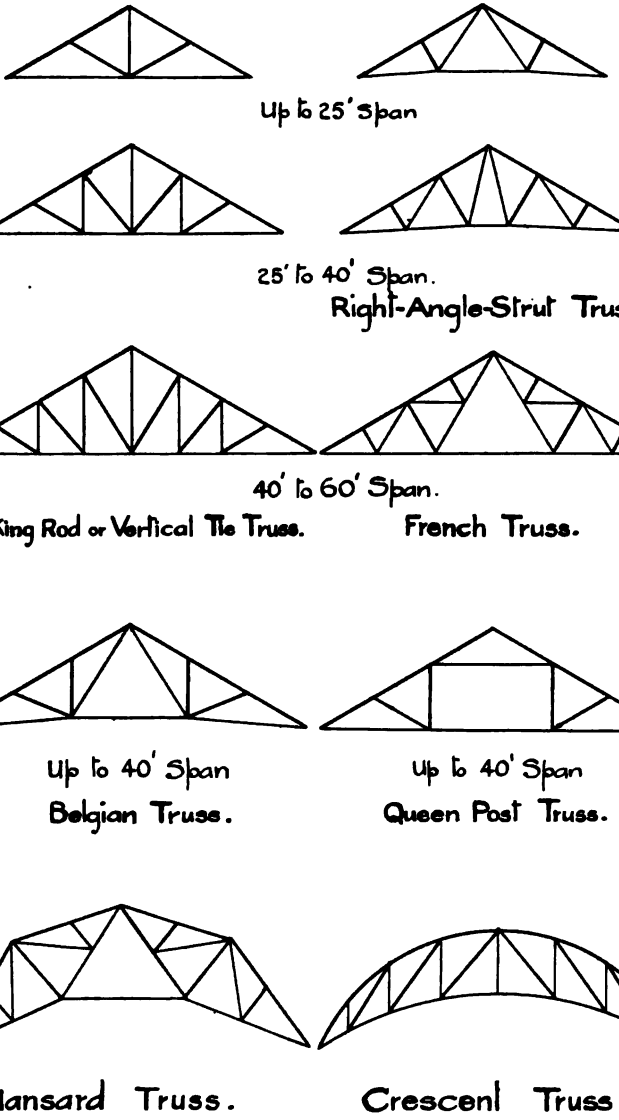

Fig. 237.—Types of Roof Trusses.

Digitized by Google

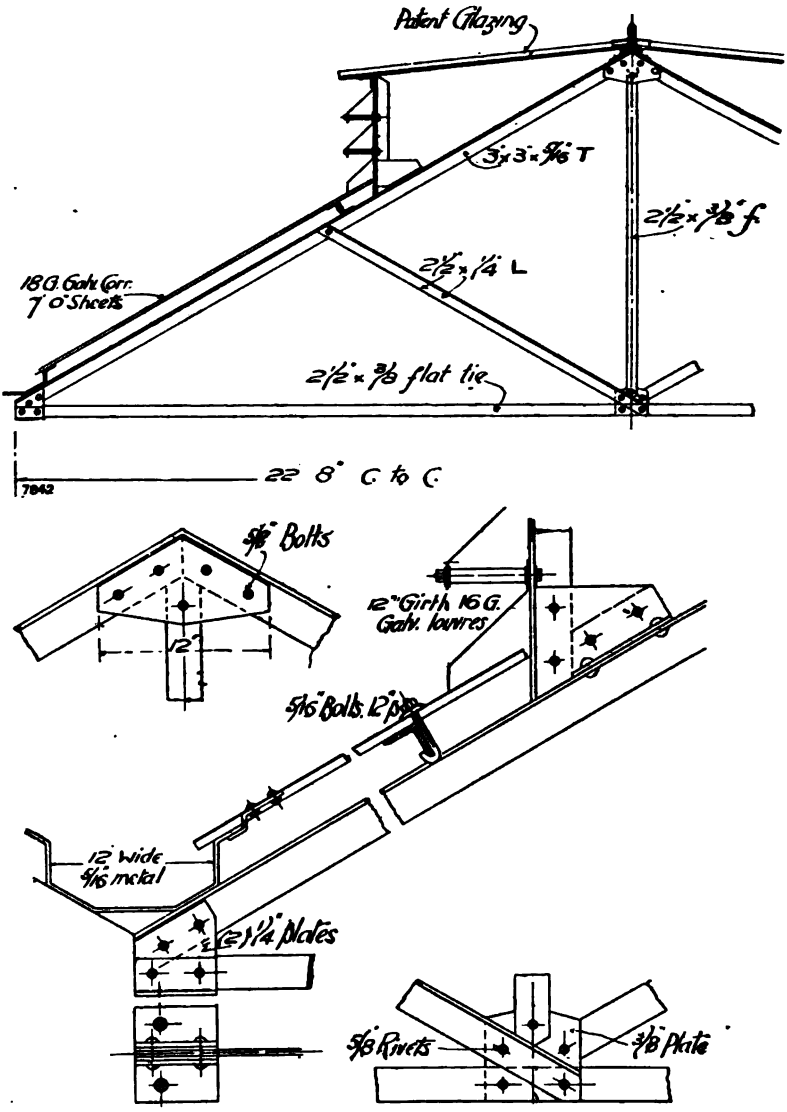

(*Engineering Review.*)

Fig. 238.—Steel King Rod Roof Truss for small Span.

Digitized by Google

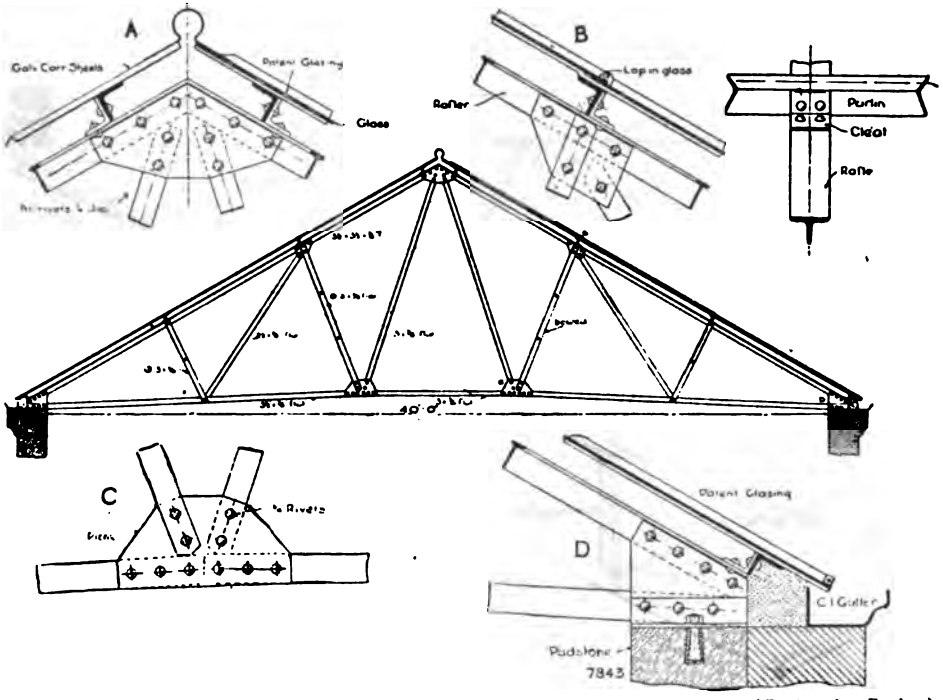

(*Engineering Review.*)

Fig. 239.—Steel Roof Truss of Right-angle Strut Type.

Digitized by Google

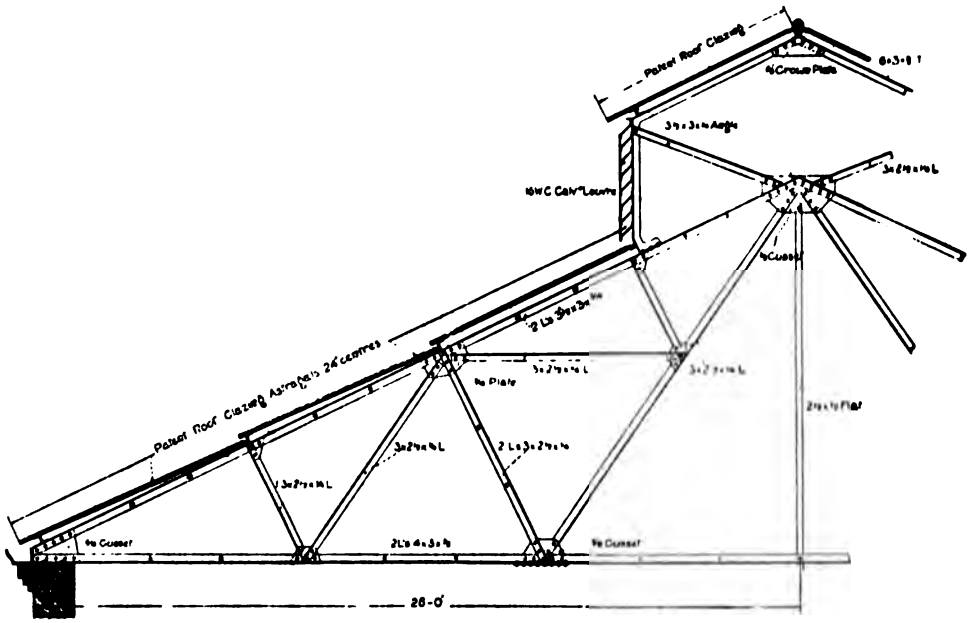

(*Engineering Review.*)

Fig. 240.—Steel French Roof Truss.

Digitized by Google

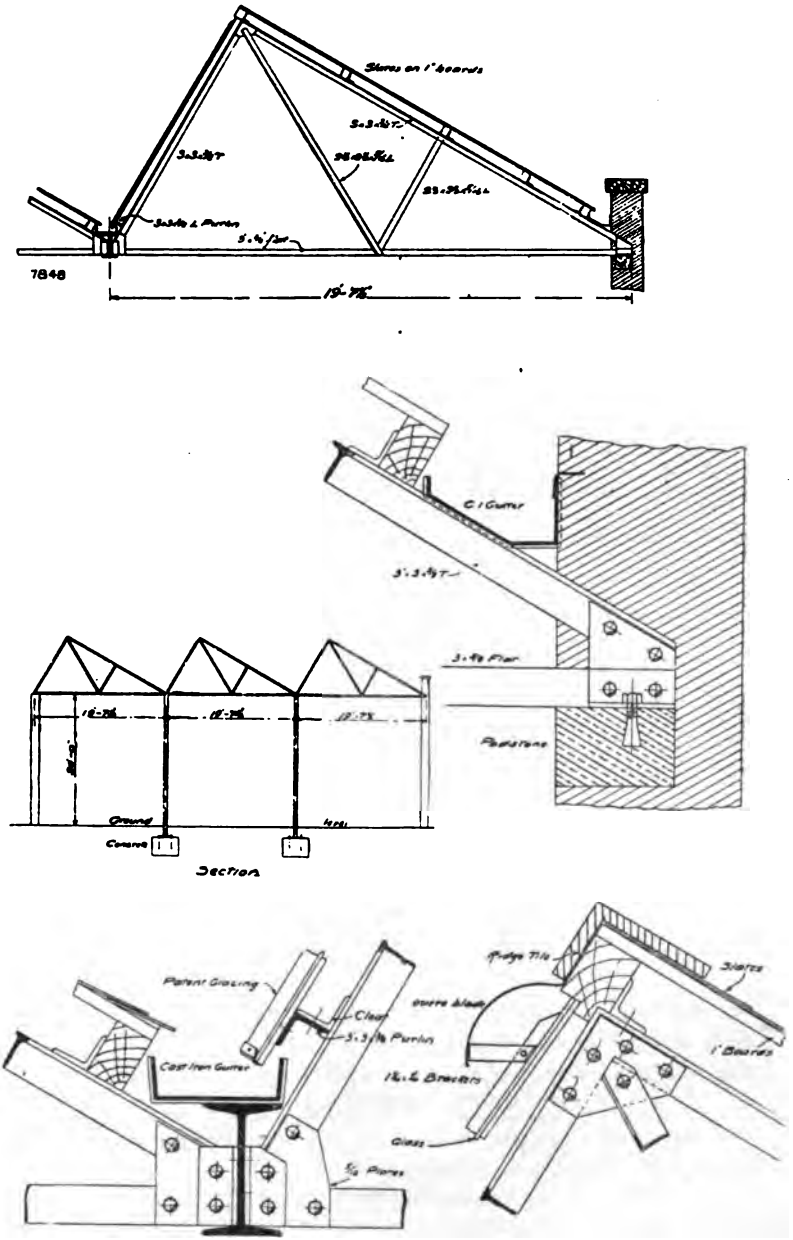

(*Engineering Review.*)

Fig. 241.—Steel Saw-tooth Roof Trusses for Factory.

Digitized by Google

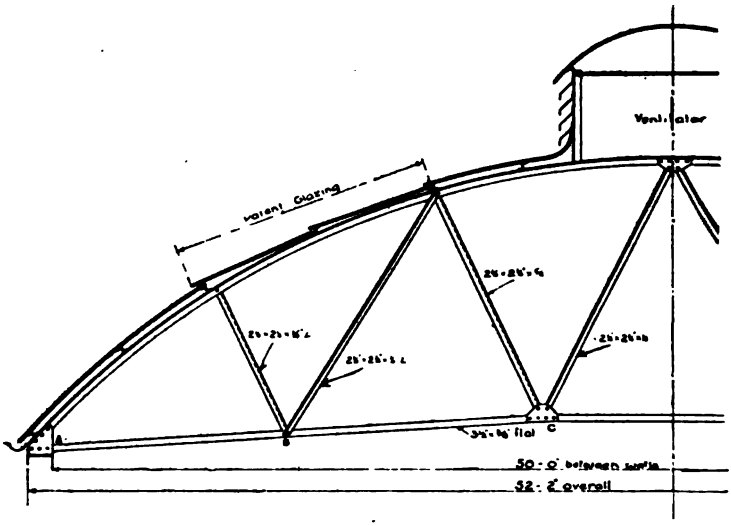

(*Engineering Review.*)

Fig. 242.—Steel Bowstring Roof Truss.

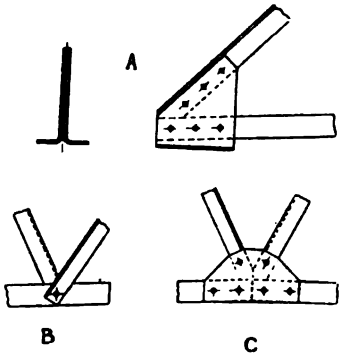

(*Engineering Review.*)

Fig. 243.

Digitized by Google

Fig. 244 shows two forms of connection sometimes met with and open to objection; the second form because it is needlessly expensive and lacks rigidity, and the first because the strut is eccentrically loaded and also wears the thread off the tie.

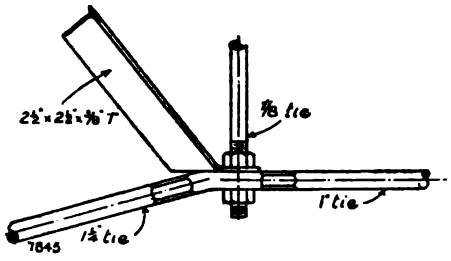

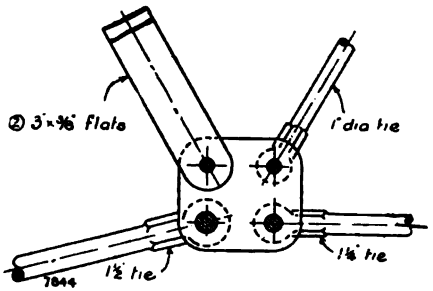

(*Engineering Review.*)

Fig. 244.

Distance apart of Principals.—There is no fixed rule for the distance apart of the principals or trusses. Up to 40 ft. span, 10 ft. is perhaps the commonest spacing, and beyond that one may say roughly one-fifth of the span.

Arrangement of Purlins.—The purlins or transverse bars by means of which the roof covering is connected to the trusses are usually of Z section, or of two inverted angles back to back. Such purlins should always be connected to the rafter at the

Digitized by Google

nodes or joints, otherwise special allowance must be made for the local bending as described on p. 312.

Fixing of Ends of Truss. — For ordinary spans the bearing or soleplate at the shoe or end of the truss is connected by foundation bolts to a stone template or padstone, or is bolted to the steel columns.

At one end, slotted holes are often provided for the bolts, to allow of movement, while for large spans roller bearings are provided similar to those used for bridges. The tendency is, however, to avoid roof trusses of large spans.

Eye Bars for Roofs and other Structures.—As we have previously pointed out, pin-jointed eye bars are not much used in this country for bridge work, and for roof work they are going out of use. Such bars are, however, occasionally required, and so we will give a few rules as to their design. The general rules to adopt in design are to make the tensile strength across the eye at least equal to that across the section of the main bar, and to make the shearing and bearing strengths of the pin equal to the tensile strength of the bar.

In America, where they have had great experience in the design of eye bars, it is common to take the width of the bar six times the thickness. In eye bars it is common to take the bearing stress something less than for rivets, say 8 tons per sq. in. for steel, to allow for imperfect fitting. Suppose d is the diameter of the pin, t the thickness of the bar, and w the width.

Then for mild steel,

Strength in tension $= 7\,w\,t$

$= 42\,t^2$ if $w = 6\,t$ ..... (1)

Strength of pin in double shear $= 2 \times \cdot7854 \times 5\,d^2$

$= 7\cdot854\,d^2$ ..... (2)

,, ,, bearing $= 8\,d\,t$ ..... (3)

If (1) equals (2),

$$7\cdot854\,d^2 = 42\,t^2$$

$$d = 2\cdot31\,t = \cdot38\,w, \text{ nearly.}$$

If (1) equals (3),

$$8\,d\,t = 42\,t^2$$

$$d = 5\cdot25 = \cdot875\,w, \text{ nearly.}$$

This would give the necessary value of $d = \frac{7}{8}\,w$.

Digitized by Google

A large number of experiments have been made on eye bars for suspension bridge, ordinary bridge and roof work, Fig. 245 showing the dimensions according to the following different authorities : (*a*) Berkley, (*b*) Shaler Smith (hammered), (*c*) Shaler Smith (hydraulic forged), (*d*) Sir Charles Fox.

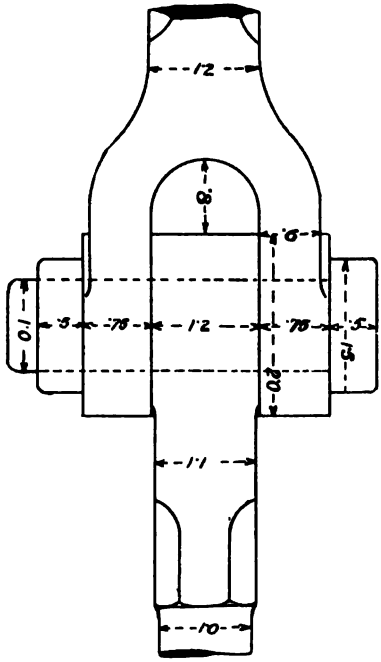

Fig. 246.—*Fork and Eye-bar Connection.*

For fork knuckle-joints for round bars, Unwin gives the dimensions given in Fig. 246.

In designing pins for a large number of connections such as occur in American truss bridges, the bending moments on the pins have also to be considered. For the allowance for the B.M. the reader may consult Bryan, Johnson, and Turneare's *Modern Framed Structures* (Wiley & Sons).

Digitized by Google

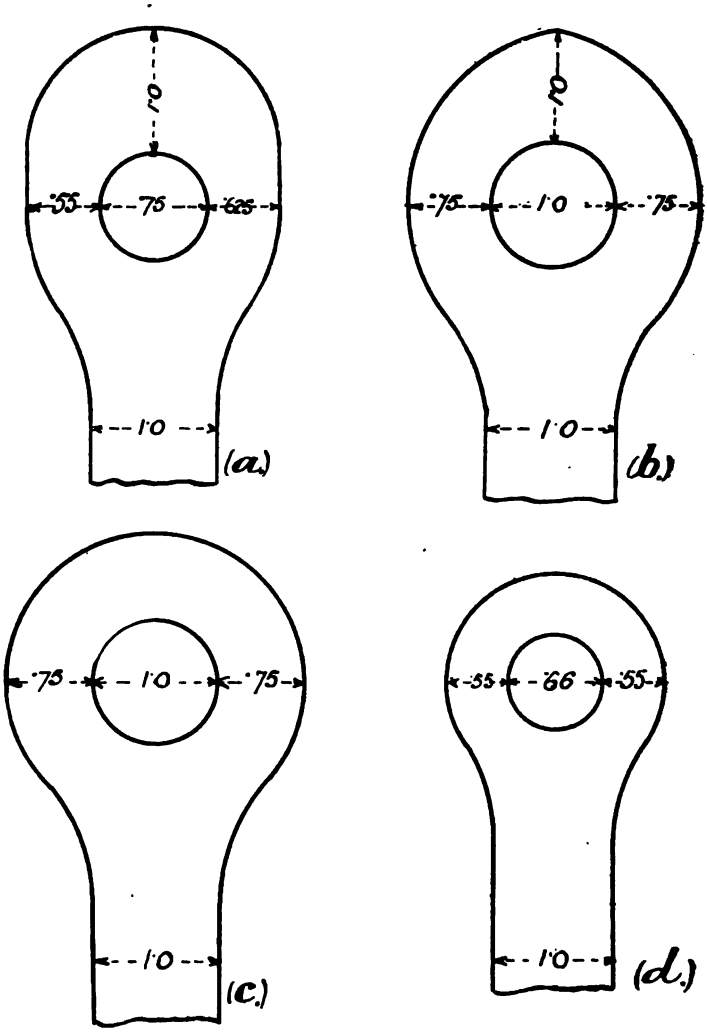

Fig. 245.—Forms of Eye Bars.

Digitized by Google

Timber Roof Trusses.—The details as to the joints, &c., in timber roof trusses will be found in most text-books on Building Construction and on Carpentry.

The following scantlings in inches for king-rod and queen-post trusses are given in *Hurst's Handbook* for roofs of northern pine, trusses 10 ft. apart, $\frac{1}{4}$ pitch, slate covering.

Span in Ft.	Tie Beam	King Post	Queen Post	Principal Rafters	Horizontal Strut	Inclined Struts	Purlins	Common Rafters
20	$9\frac{1}{2} \times 4$	4×3	--	4×4	—	$3\frac{1}{2} \times 2$	$8 \times 4\frac{3}{4}$	$3\frac{1}{2} \times 2$
22	$9\frac{1}{2} \times 5$	5×3	—	$5 \times 3\frac{1}{2}$	—	$3\frac{3}{4} \times 2\frac{1}{2}$	$8\frac{1}{4} \times 5$	$3\frac{3}{4} \times 2$
24	$10\frac{1}{2} \times 5$	$5 \times 3\frac{1}{2}$	—	5×4	—	$4 \times 2\frac{1}{2}$	$8\frac{1}{2} \times 5$	4×2
26	$11\frac{1}{2} \times 5$	5×4	—	$5 \times 4\frac{1}{4}$	--	$4\frac{1}{4} \times 2\frac{1}{2}$	$8\frac{3}{4} \times 5$	$4\frac{1}{4} \times 2$
28	$11\frac{1}{2} \times 6$	6×4	—	$6 \times 3\frac{1}{2}$	—	$4\frac{1}{2} \times 2\frac{3}{4}$	$8\frac{3}{4} \times 5\frac{1}{4}$	$4\frac{1}{2} \times 2$
30	12×6	$6 \times 4\frac{1}{2}$	—	6×4	—	$4\frac{3}{4} \times 3$	$9 \times 5\frac{1}{2}$	$4\frac{3}{4} \times 2$
32	$10 \times 4\frac{1}{2}$	--	$4\frac{1}{2} \times 4$	$4\frac{1}{2} \times 6\frac{3}{4}$	$6\frac{3}{4} \times 4\frac{1}{2}$	$3\frac{3}{4} \times 2\frac{1}{4}$	$8 \times 4\frac{3}{4}$	$3\frac{1}{2} \times 2$
34	10×5	--	$5 \times 3\frac{1}{2}$	$5 \times 6\frac{1}{2}$	$6\frac{3}{4} \times 5$	$4 \times 2\frac{1}{2}$	$8\frac{1}{4} \times 5$	$3\frac{3}{4} \times 2$
36	$10\frac{1}{2} \times 5$	—	5×4	$5 \times 6\frac{3}{4}$	7×5	$4\frac{1}{4} \times 2\frac{1}{2}$	$8\frac{1}{2} \times 5$	4×2
38	10×6	—	$6 \times 3\frac{3}{4}$	6×6	$7\frac{1}{4} \times 6$	$4\frac{1}{2} \times 2\frac{1}{2}$	$8\frac{1}{2} \times 5$	4×2
40	11×6	—	6×4	$6 \times 6\frac{1}{2}$	8×6	$4\frac{1}{2} \times 2\frac{1}{2}$	$8\frac{1}{2} \times 5$	$4\frac{1}{4} \times 2$
42	$11\frac{1}{2} \times 6$	-	$6 \times 4\frac{1}{2}$	$6 \times 6\frac{3}{4}$	$8\frac{1}{4} \times 6$	$4\frac{1}{2} \times 2\frac{3}{4}$	$8\frac{3}{4} \times 5\frac{1}{4}$	$4\frac{1}{2} \times 2$
44	12×6	—	6×5	6×7	$8\frac{1}{2} \times 6$	$4\frac{1}{2} \times 3$	9×5	$4\frac{3}{4} \times 2$
46	$12\frac{1}{2} \times 6$	—	$6 \times 5\frac{1}{2}$	$6 \times 7\frac{1}{4}$	9×6	$4\frac{3}{4} \times 3$	$9 \times 5\frac{1}{2}$	5×2

Collar Beam and Hammer Beam Roof Trusses — These trusses are used largely in churches, public halls, and possess the advantage of good appearance, but the disadvantage of being unscientific in design, as the stresses in them cannot be exactly determined because the resistance or thrust offered by the wall is not known.

In the *collar beam truss*, for which a design for a span of 30 ft. at 45° pitch is shown in Fig. 247, there is no tie bar, the thrust being taken by the wall or by bending stresses in the rafter. This is not a perfect frame, and the stresses in it cannot

Digitized by Google

be found until the strength of the walls to resist thrust is known. If the walls are quite rigid, so that the resultant thrust is along

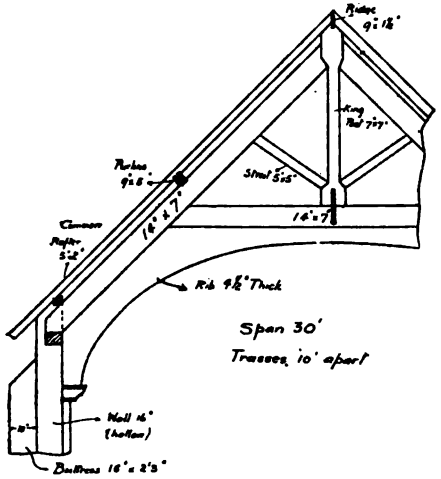

Fig. 247.—Collar Beam Truss.

the rafter, then the collar beam is in compression, the stresses then being shown as at *a*, Fig. 248, o 1 and o 1′ giving the thrust on the walls. We have taken equal loading as being the most

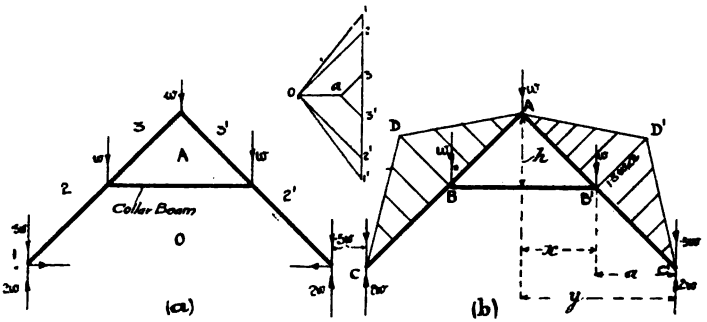

Fig. 248.—Collar Beam Truss.

common in practice. If, however, the walls are not buttressed, and can offer no resistance to horizontal thrust, there will be a

Digitized by Google

bending moment on the rafter, and the collar beam will be in tension—Case (*b*). The stresses cannot in this case be easily found by the stress diagram. The stress in the collar beam is obtained by the method of moments as follows:

Take moments round A.

$$\text{Stress in BD} \times h = (2w - \cdot 5w)y - w \cdot x$$

$$\text{Stress in BD} = \frac{(1 \cdot 5y - x)w}{h}$$

The thrust in the rafters will be the resolved component of the resultant force at c or $c' = 2w - \cdot 5w = 1 \cdot 5w$, and the B.M. diagrams will be as shown, the maximum B.M. being $1 \cdot 5\ w\ a$.

The wall should be buttressed so as to take the thrust given in Case (*a*). It will be seen that the roof has to be designed sufficiently strongly in case the walls yield, and the latter should be designed so as to prevent their being thrust out. As shown in Fig. 247, a wooden arch rib is usually provided to take the B.M., and this may be strengthened by steel or iron plates at the point of maximum B.M., as shown for the hammer beam truss (Fig. 249). The wind pressure stresses in this case are very troublesome to investigate.

A similar truss with a steel arched tie is worked out in Fig. 150.

In the *hammer-beam truss*, a design for a span of 34 ft. for which is shown in Fig. 249, there is also no tie bar, but it is practically a perfect truss, as shown in the frame diagram, the reciprocal figure for which is also shown. In this case the reactions have each been taken parallel to the resultant force. In practice there will be a thrust on the walls tending to bulge them outwards, and such thrust will lessen the stresses in the truss, but it is not generally satisfactory to allow for these diminished stresses in the design. The maximum thrust which can come on the walls will in most cases be such as to make the resultant reactions come in the directions 8 A and 8 K.

In all cases where it is possible, a tie bar should be provided, because in such a case the stresses can be determined with much greater exactitude, and the scantlings can be made considerably lighter.

Digitized by Google

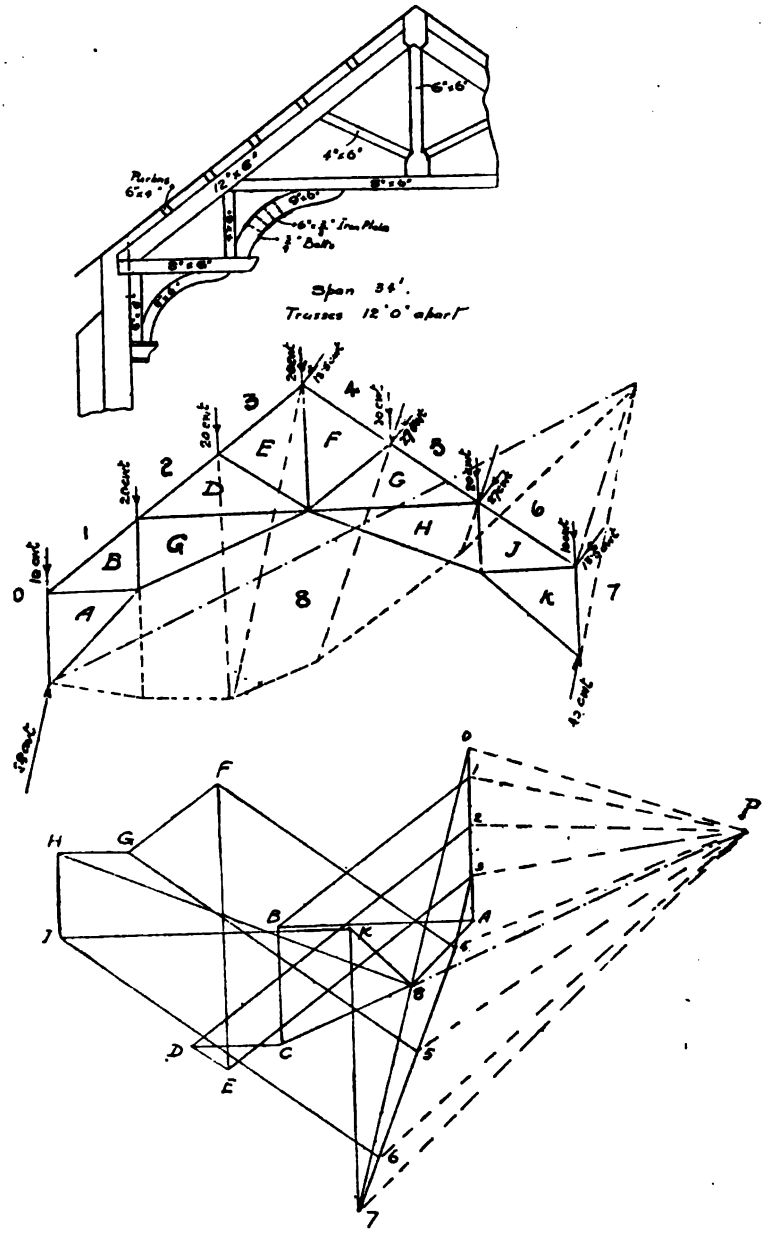

(*Builders' Journal.*)

Fig. 249.—Hammer Beam Trusses.

Digitized by Google

CHAPTER XVIII.

DESIGN OF BRIDGES AND GIRDERS.

We will now consider the applications of the principles which we have explained in previous chapters to the design of bridges and girders. Some practical notes on material sizes will be found on p. 469.

Loads on Bridges.—(*a*) DEAD LOADS.—These consist of the loads of the permanent structure, and consist of the weight of the steelwork itself, ballast, cement, sleepers, &c., and as much as possible of this should be calculated from the exact dimensions.

The following figures may be used as a guide in design:—

Jack arch flooring	...	250 lb. per sq. ft.
Trough flooring	...	13 to 50 „
Roadway setts ...	...	120 „
Rails	...	·06 tons per ft. per line of rail.
Ballast	...	15 to 21 „ „ „
Timber	...	·07 to ·17 „ „ „

Sir Benjamin Baker gave the following figures for the dead loads of flooring and wind bracing in cwt. per ft. run for a double line.

Span in ft.	Dead Load in cwt. per ft. run		
	2 main girders	3 main girders	4 main girders
10–100	14	12	10
100–150	15	13	11
150–200	16	14	12
200–250	17	15	13
250–300	18	16	14

Digitized by Google

WEIGHTS OF GIRDERS.—In order to make an approximate allowance for the weights of the girders themselves, the following formulæ have been suggested :—

(1) *Unwin's Formula.*

$$w_1 = \text{weight of girder per ft. run} = \frac{W r}{c s - l r}$$

where W = load to be carried in tons.

l = span in feet.

r = ratio of span to depth.

s = working stress in tons per sq. in.

c = a constant, which may be taken from 1200 to 1400 for small plate girders, and 1700 to 1900 for truss bridges.

(2) *Anderson's formula* (for plate girders).

$$w_1 = \frac{W}{500}$$

(3) *Johnson, Bryan, and Turneare Formula* (*'Modern Framed Structures'*).

l = span in ft.

w = weight of girders in lb. per ft. run.

Deck plate girders—$w = 9\,l + 120$

„ lattice „ —$w = 7\,l + 200$

Through pin bridge—$w = 5\,l + 350$

The above figures are for single tracks.

(*b*) LIVE LOADS.—As we have explained in Chapter VII. for railway bridges it is usual to find the equivalent rolling load for a train rolling over a span. The following table shows the figures used by one of our railway companies :—

Digitized by Google

Table showing the Uniformly Distributed Rolling Load on a Single Line of Railway adopted in calculating the Strength of the Main Girders of all Under Bridges.

Span in Feet	Load in Tons	Span in Feet	Load in Tons	Span in Feet	Load in Tons	Span in Feet	Load in Tons	Span in Feet	Load in Tons	Span in Feet	Load in Tons	Span in Feet	Load in Tons	Span in Feet	Load in Tons	Span in Feet	Load in Tons	Span in Feet	Load in Tons
under 12	40	21	57	31	74	41	86	51	99	61	113	71	130	81	148	91	166		
12	41	22	59	32	75	42	87	52	100	62	115	72	132	82	150	92	168		
13	42	23	61	33	77	43	89	53	101	63	117	73	134	83	152	93	170		
14	44	24	63	34	78	44	90	54	102	64	118	74	136	84	154	94	171		
15	46	25	65	35	80	45	91	55	103	65	119	75	137	85	155	95	173		
16	48	26	66	36	81	46	92	56	105	66	121	76	139	86	157	96	175		
17	50	27	68	37	82	47	94	57	106	67	123	77	141	87	159	97	177		
18	52	28	70	38	83	48	95	58	107	68	125	78	143	88	161	98	179		
19	54	29	71	39	84	49	96	59	109	69	127	79	145	89	163	99	180		
20	55	30	72	40	85	50	97	60	111	70	128	80	146	90	164	100	182		

In Vol. CLVIII. *Proc. Inst. C.E.*, Professor Lilly gives a formula for the average results of the leading British Railway companies as

$$\text{Live load in tons per ft. run for a single line} = \frac{30}{\text{span in ft.}} + 1{\cdot}75$$

$$\text{or allowing for impact} = \frac{41}{\text{span in ft.}} + 1{\cdot}75$$

IMPACT ALLOWANCE.—We have in Chapter II. shown how the working stress may be obtained with an allowance for variation by the Launhardt-Weyrauch formula. This is used by the French Government, and so is also known as the French formula.

In America, and recently in this country, it has become common to use instead an impact formula.

Waddell's impact formula is

$$I = \frac{400}{L + 500}$$

Where L is the length in feet of that portion of the span which is covered by the live load when the maximum stress under consideration is produced, and I is the percentage by which the maxi-

Digitized by Google

mum static stress is to be increased. Another similar formula (American Bridge Company) is

$$I = \frac{300}{L + 300}$$

Mr. Stone has endeavoured to estimate the coefficient by which a live load should be multiplied in different cases to allow for this impact effect, by analysing the many records of bridge deflections under moving loads carried out on behalf of the Indian Government. He assumes that impact is proportionally more important, the greater the ratio of live to dead load, or, as he prefers to call it, of moving to fixed load. We give below figures extracted from a table of such coefficients drawn up by Mr. Stone.

Nature of Compound Load. Ratio Percentage		Immediate Effect of Moving Load Compared with that of Fixed Load	Nature of Compound Load Ratio Percentage		Immediate Effect of Moving Load Compared with that of Fixed Load
Fixed Load	Moving Load	Percentage	Fixed Load	Moving Load	Percentage
0	100	...	50	50	103·87
2·5	97·5	147·40	55	45	103·23
5	95	133·78	60	40	102·63
10	90	122·63	65	35	102 10
15	85	116·86	66·7	33·3	101·96
20	80	113·06	70	30	101·64
25	75	110·27	75	25	101·21
30	70	108·13	80	20	100·82
33·3	66·7	107·14	85	15	100·53
35	65	106·63	90	10	100·30
40	60	105·47	95	5	100·13
45	55	104·62	100	0	100·00

A higher impact allowance is often made for cross girders than for main girders.

Live Loads on Road Bridges.

Crowd of people = 120 lb. per sq. ft.
General traffic = 200 to 300 lb. per sq. ft.

Digitized by Google

The above figure includes loads from traction engines, &c., and is probably higher than necessary.

An alternative and in some respects more satisfactory method is to allow 100 to 150 lb. per sq. ft., and also for a rolling load of 10 to 25 tons for traction engines.

For bridges carrying heavy electric trams as exact an estimate as possible of the weight of the trams should be made.

Mr. T. Cooper, of New York, suggests the following specifications for road bridges:—

CLASS A. CITY AND SUBURBAN BRIDGES LIABLE TO HEAVY TRAFFIC.—A load upon each square foot of floor, including footwalks, of 100 lb. for spans up to 100 ft.; 80 lb. over 200 ft.; and proportionately for intermediate spans.

Or a steam roller of 15 tons, arranged as follows:—6 tons on forward and 9 tons on rearward axle; axles 11 ft. apart and rollers 20 ins. wide, front rollers being 2 ft. 6 ins. centre to centre, and back rollers 6 ft.

CLASS B. BRIDGES IN MANUFACTURING DISTRICTS, NEAR QUARRIES, &C.—80 lb. per sq. ft. up to 100 ft. span; 60 lb. beyond 200 ft. and proportionately for intermediate spans.

Or a concentrated load of 8 tons on wheels at 8 ft. centres.

CLASS C. COUNTRY BRIDGES.—Same as B, but concentrated load 5 tons.

Professor Dubois, of Yale, gives the following figures*:—

SPAN IN FT.	LIVE LOAD IN LB. PER SQ. FT.		
	CLASS A	CLASS B	CLASS C
100 and under	100	90	70
100 to 200	80	60	60
200 to 300	70	50	50
300 to 400	60	50	45
400 and over	50	50	45

* *Stresses in Framed Structures* (Wiley & Sons).

Digitized by Google

Types of Bridges.—A DECK BRIDGE is one in which the loads are transmitted to the upper flange or boom.

A THROUGH BRIDGE is one in which the loads are transmitted to the lower flange or boom.

EFFECTIVE SPAN of a bridge may be taken as the span between the centre of the bearings, the span between the edges of the bearings being termed the *clear span.*

For spans up to 15 or 20 ft., it may be taken that beams of plain rolled sections are most suitable, and plate or box girders for spans of 15 to 90 ft.; beyond this, framed girders will generally be most suitable, suspension bridges, cantilever girder bridges, and arches being necessary for very large spans.

***Economical Span.**—In bridging a large span by a number of smaller spans, the economical span may be arrived at in the following manner (*Ency. Brit.*):

Let P = cost of one pier.
G = cost of main girders for one span erected.
n = number of small spans.
l = length of small spans.
L = total span.

$$\therefore n = \frac{L}{l}$$

Then cost of piers $= (n - 1)\,P$

Cost of main girders $= n\,G$, and G may be taken as proportional to the square of the span, so that

$$G = a\,l^2$$

$$\therefore \text{Total cost} = C = (n - 1)\,P + n\,a\,l^2$$

To get the minimum value of C we differentiate with respect to l and put it equal to zero.

$$i.e., \quad \frac{dC}{dl} = 0.$$

$$\text{Now } C = \left(\frac{L}{l} - 1\right)P + \frac{L\,a\,l^2}{l}$$

$$= \frac{L\,P}{l} - P + L\,a\,l$$

$$\frac{dC}{dl} = -\frac{L\,P}{l^2} + L\,a = 0.$$

Digitized by Google

$$\therefore \frac{P}{l^2} = a$$

$$\text{or } P = a\,l^2 = G.$$

∴ The most economical condition is when the cost of one pier = cost of main girders for one span.

If G_1 = cost of 100 ft. span, the result may be expressed as:

$$\text{Economic span} = \frac{100\sqrt{P}}{\sqrt{G_1}}$$

Arrangement of Main Girders and Flooring.—The general arrangement of the main girders and flooring should be decided upon before the detail design is attempted.

As a general rule it may be taken that a deck bridge is more economical than a through bridge.

In all cases the floors should be made watertight, and provision made for drainage; the camber assists in the latter. A fender or rust plate should also be riveted to the webs in contact with ballast, &c., to prevent rusting.

Fig. 250 shows the most economical arrangement when there is sufficient headroom. Main girders are placed under each rail in railway bridges or at intervals in road bridges, and floor plates, sometimes dished or buckled, are riveted between them, or trough floors may be used. The span in the above example is 70 ft.

Fig. 251 shows an arrangement in which there is less head room. Cross girders are spaced at 7 ft. centres, and the rails are carried on rail-bearers or stringers, the rail-bearers and cross girders being both small plate girders, and the cross girders being designed so as to carry the heaviest load on one wheel, such load being considered concentrated on the rails. As the depth of the girders in this case is limited by Board of Trade rules that the top of the main girders shall not be more than 6″ above the rail level if the horizontal distance between rail and flange is less than 2′ 3″, this is suitable for comparatively small spans say up to 40 ft. In all cases also there must be a parapet 4′ 6″ above the rail level.

Figs. 252, 252*a*, show a variation of the above type on a 42 ft.

Digitized by Google

span. In this case there is no parapet girder, and as the distance between the edge of the rail and the flange is 2′ 3″, the top of the flange may be up to 2′ 6″ above the top of the rail. This type may be used for spans up to 60 ft., above which the 2′ 3″ dimension must be increased to 4′ 6″. The above two types are very suitable for repairs, widenings, &c.

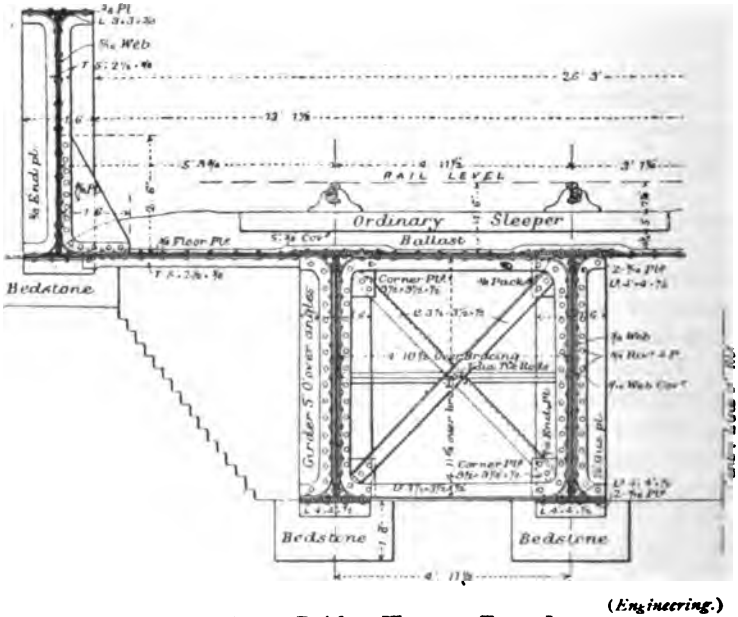

(*Engineering.*)

Fig. 250.—*Bridge Floors. Type I.*

Fig. 253 shows a type with one centre girder for a double line, the example given being one in which the floor has to be specially designed owing to the very limited head room. In this type the cross girders should preferably be staggered to prevent connecting rivets going right through the centre girder.

If the span is greater than 60 ft. and the width of line cannot be increased, the centre girder may be dispensed with, but this should be done in extreme cases only.

Digitized by Google

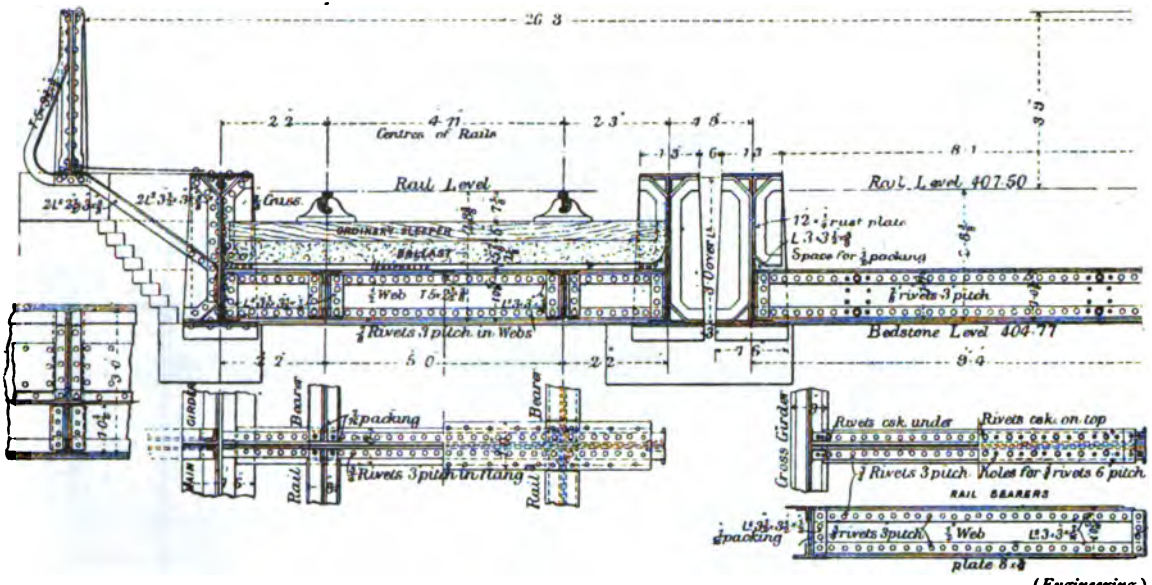

(*Engineering.*)

Fig. 251.—*Bridge Floors. Type II.*

Digitized by Google

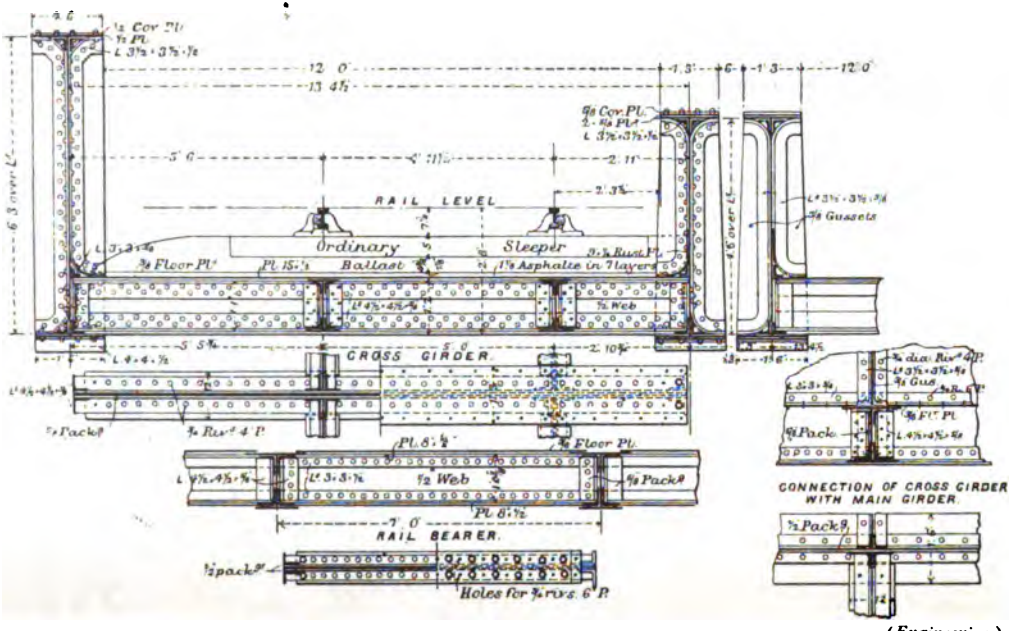

(*Engineering.*)

Fig. 252.--Bridge Floors. Type III.

Digitized by Google

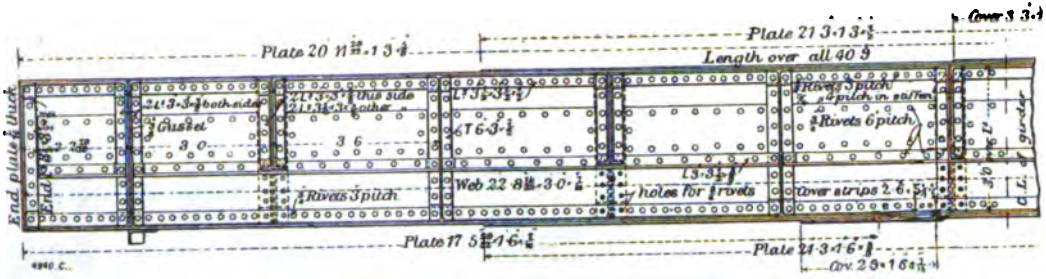

Fig. 252a.—Elevation of Main Girder of Fig. 252.

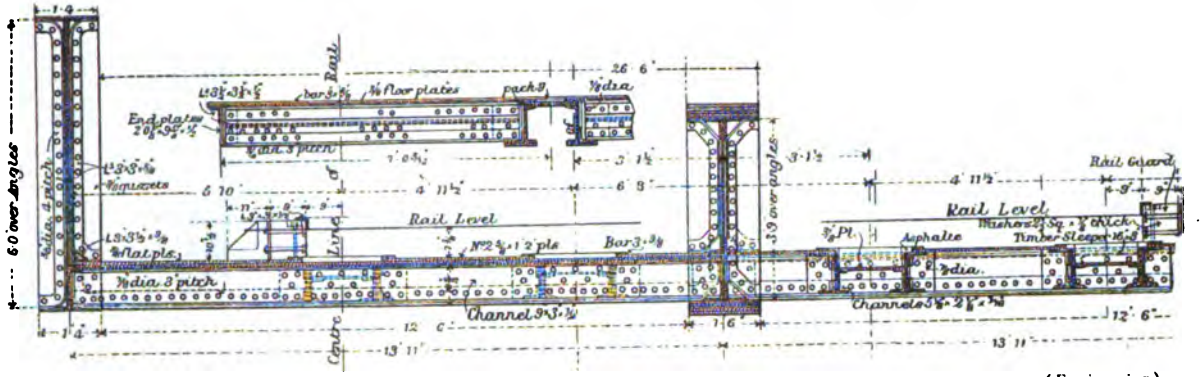

Fig. 253.—Bridge Floors. Type IV.

Digitized by Google

Fig. 254 shows a small span bridge with a square trough flooring to save head room.

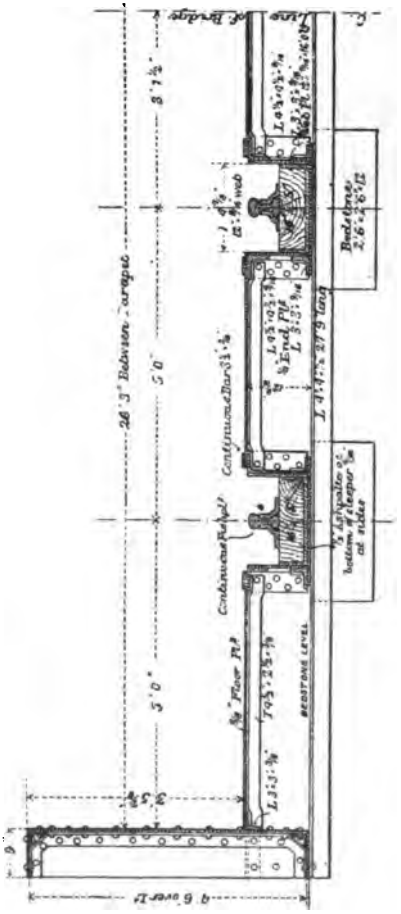

Fig. 254.—Built-up Trough Floor. (*Engineering.*)

Fig. 255 shows a bridge with 'Jack arch' flooring. This is a very reliable form of flooring, but is very heavy, and so unsuitable for large spans. For road bridges 'Jack arches' are

Digitized by Google

often placed between main girders, thus doing away with cross girders. This requires appreciable headroom.

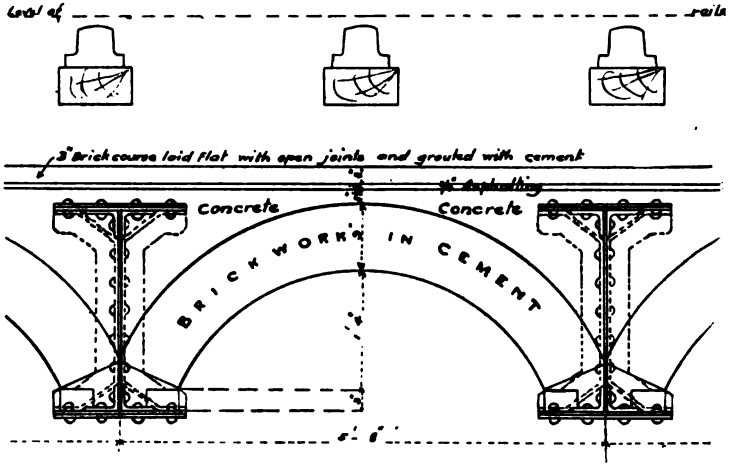

Fig. 255.—'*Jack Arch*' *Floor.*

TROUGH FLOORINGS.—In recent years trough floorings have been used to a large extent. They are usually built up of rolled sections, and the moduli, &c., of one common form—Lindsay's

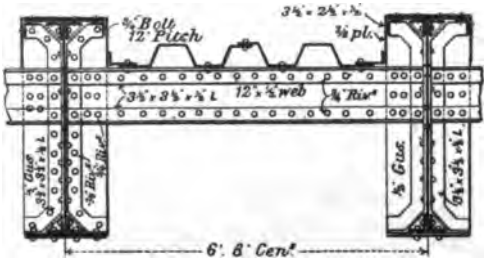

Fig. 256.—*Trough Floor for Road Bridge.* (*Engineering.*)

patent flooring—will be found in the *Pocket Companion*, published by Messrs. Dorman, Long, & Co., of Middlesborough.

Fig. 256, shows a section of a trough floor used on a road

Digitized by Google

bridge, while Fig. 257, shows a trough floor on a large truss bridge, this being the slung span of a cantilever girder bridge recently erected over the River Indus.

For small road bridges, trough flooring may be used without main girders.

CAMBER.—A girder is usually given a slight upward initial deflection, so that when loaded it will never sag below the horizontal. The value of this upward deflection or camber is usually $\frac{1}{4}$ in. at the centre for each 10 ft. of span. The corresponding increase in the lengths of the booms, can be found as follows :

v = camber in inches.
N = number of bays.
D = depth between centres of flanges.
L = length of one bay in feet.
s = horizontal length of bottom boom.
x = increase in length of top boom in one bay in inches.
y = total increase in length of top boom.

Then $x = \frac{8\,v\,H}{N^2\,L}$

$y = \frac{8\,v\,H}{N\,L}$ When $v = 1''$ in 40 ft.

$x = \frac{S\,H}{5\,N^2\,L}$

$y = \frac{S\,H}{N\,L}$

This camber obviates the additional stress, due to the centrifugal force of the train running round the curve, which would otherwise occur due to deflection.

DESIGN OF BOX AND PLATE GIRDERS.

Having decided on the weights, &c., on a box or plate girder, the detail design is carried out in the following manner :—

Depth of Girders.—For plate girders the economic depth may be taken as from $\frac{1}{10}$ to $\frac{1}{15}$ of the span, $\frac{1}{12}$ often being adopted.

Digitized by Google

(*Engineering.*)

Fig. 257.—Bridge over River Indus, showing Trough Flooring.

To face p. 528.

Digitized by Google

Digitized by Google

For box girders a smaller depth is often adopted, $\frac{1}{20}$ of the span often being used. The available head room often really determines the depth.

Breadth of Flanges.—After the depth of the girder has been decided upon, the breadth of the flanges is next settled. This is taken as about $\frac{1}{3}$ of the depth, or $\frac{1}{30}$ to $\frac{1}{40}$ of the span.

Approximate Area of Flanges.—To obtain the area of flanges, the maximum B.M. is first found and the working stress is decided upon, then using our usual notation, we have

$$M = fZ$$

$$i.e., \quad Z = \frac{M}{f}$$

We have already shown on p. 174, that for a beam of **I** or box section in which the depth is large compared with the thickness of flange and web,

$$Z = D\left(A + \frac{a}{6}\right) \quad \ldots\ldots\ldots\ldots\ldots\ldots\ldots\ldots\ldots\ldots\ldots\ldots (1)$$

Where D = depth between centres of flanges
A = area of one flange
a = area of web.

In practice, D is usually taken as the depth over the angles, because the depth between centres of flanges varies slightly along the section, and is not fixed until the sizes of flanges are determined.

In this country, it is common to neglect the web altogether and to write the formula

$$Z = A\,D \quad \ldots\ldots\ldots\ldots\ldots\ldots\ldots\ldots\ldots\ldots\ldots\ldots (2)$$

$\therefore$ From (1) $A = \frac{M}{f.D} - \frac{a}{6}$

„ (2) $A = \frac{M}{f.D}$

In the most common case of uniform loading, $M = \frac{W\,L}{8}$

$\therefore$ The formulæ become

$$A = \frac{W\,L}{8f} - \frac{a}{6}$$

and $A = \frac{M}{f.D}$

Digitized by Google

In the above formulæ A is the *nett area of one flange*, such nett area should include the tops of the angles, but should exclude the area of the rivets. These areas are then as shown shaded in Fig. 258.

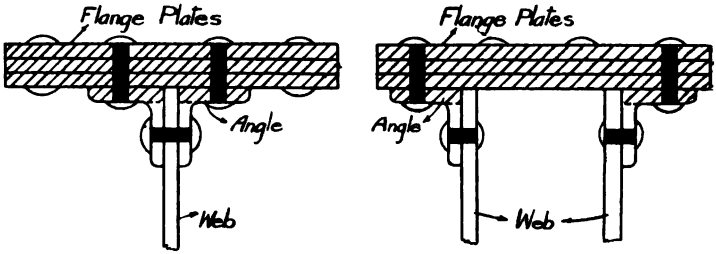

Fig. 258.

If the riveting is chain, as shown in Fig. 259 (*a*), the area of four rivets must be subtracted to give the nett area.

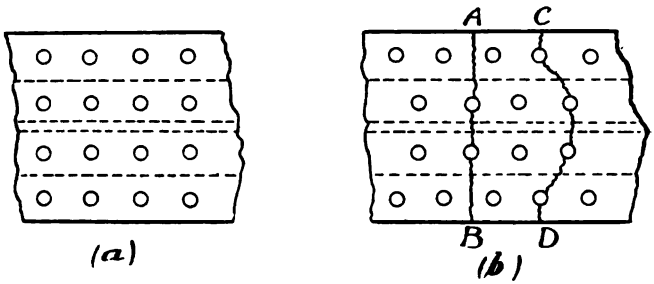

Fig. 259.

If the riveting is zig-zag, as shown in Fig. 259 (*b*), the area of two rivets should be subtracted. Some authorities subtract the area of three rivets in this case, for the following reason :—

Instead of tearing taking place along the line A B, it might take place along the line C D, which might be less than A B if the pitch is small.

NUMERICAL EXAMPLE.—*A plate girder is of* 48 *ft. span and carries a fixed uniform load of* 87·8 *tons, including its own weight; using a working stress of* 7 *tons per sq. in., and assuming a thickness of web* $\frac{5}{8}$ *in., find a suitable section. Rivets* $\frac{7}{8}$ *in. diameter.*

Digitized by Google

Depth over angles $= \frac{\text{span}}{12} = 4$ ft.

Breadth of flange $= \frac{\text{span}}{35} =$ say 16 ins.

Maximum B.M. $= \frac{W\,L}{8} = \frac{87{\cdot}8 \times 48 \times 12}{8}$ in. tons.

$\therefore$ Modulus required $= \frac{87{\cdot}8 \times 48 \times 12}{7 \times 8}$ in. units.

$= 900$ nearly.

$\therefore$ (1) *Neglecting web.*

$$A = \frac{900}{4 \times 12} = 18{\cdot}8 \text{ sq. in.}$$

Using $3\frac{1}{2} \times 3\frac{1}{2} \times \frac{1}{2}$ angles, nett area of tops

$$= 2\left(3\tfrac{1}{2} - \tfrac{7}{8}\right) \times \tfrac{1}{2} = 2{\cdot}6 \text{ sq. in. nearly}$$

$\therefore$ Net area of plates required $= 18{\cdot}8 - 2{\cdot}6$

$= 16{\cdot}2$

Nett breadth of flanges, subtracting two rivets

$$= \left(16 - 2 \times \tfrac{7}{8}\right) = 14{\cdot}25$$

$\therefore$ Thickness of flanges $= \frac{16{\cdot}2}{14{\cdot}25} = 1{\cdot}14$ nearly

$\therefore$ Three $\frac{3}{8}$ in. plates may be used.

(2) *Allowing for web.*

$\frac{1}{6}$ area of web $= \frac{5}{8} \times \frac{48}{6} =$ 5 sq. in.

As before area of tops of angles $= 2{\cdot}6$ „

Total $= 7{\cdot}6$ sq. in.

$\therefore$ Nett area of plates required $= 18{\cdot}8 - 7{\cdot}6 = 11{\cdot}2$ sq. in.

As before nett breadth of flanges $= 14{\cdot}25$

$\therefore$ Thickness required $= \frac{11{\cdot}2}{14{\cdot}25} = {\cdot}786$ nearly

$\therefore$ One $\frac{1}{2}$ in. and one $\frac{3}{8}$ in. plate will do.

As a check we will calculate the modulus more accurately for this section, which comes as shown in Fig. 260.

First find the moment of inertia of half the section about the N.A. as follows :

Digitized by Google

I of 2 plates about N.A. $= \frac{14{\cdot}25}{3}(24{\cdot}875^3 - 24^3) = 7500$ nearly.

I of 2 angles about N.A. = (from tables) = 7

A d^2 for 2 angles $= 6{\cdot}5 \times 22{\cdot}95^2 = 3434$

I of web $= \frac{5}{8} \times \frac{24^3}{3} = 2880$

Total ... 13,821 in. units.

$$\therefore \text{Modulus} = \frac{2 \times 13{,}821}{24} = 1152 \text{ nearly.}$$

The modulus required = 900 nearly, so we see that the rule allowing for web gives results on the safe side, and gives designs which are more economical than the rule neglecting the web.

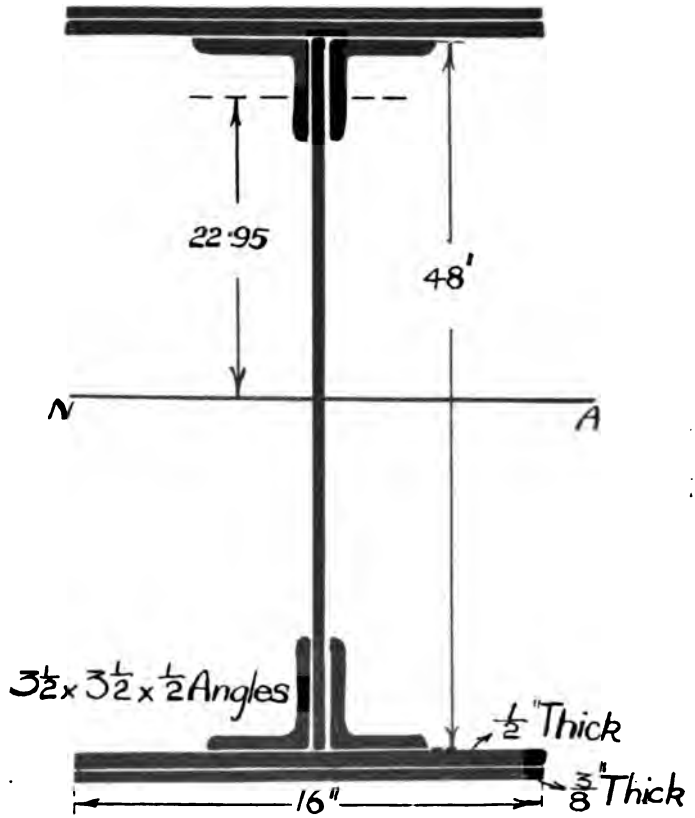

Fig. 280.—Plate Girder Section.

Digitized by Google

Compression Flange.—The above calculation applies to the tension flange only. If the compression flange be considered, the rivets need not be subtracted, but the working stress will be less. It is better in practice not to make the compression flange different from the tension flange. If the calculations are made for this flange, the necessary thicknesses will be found almost the same as for the tension flange.

Curtailment of Flange Plates.—If the section of the girder were constant throughout its length, for most kinds of loading it will be stronger near the abutments than it need be, and so some means are usually adopted for varying the strength

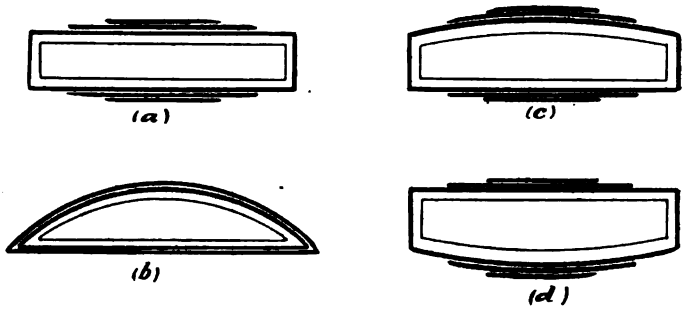

Fig. 261.—*Plate Girders of Uniform Strength*

of the girder so as to get the working stress as nearly as possible constant. This may be done in one or other of the following ways (shown diagrammatically in Fig. 261).

(*a*) Keeping the depth constant and varying the thickness of the flanges along the length.

(*b*) Varying the depth of the girder and keeping the flange thickness constant. This gives the parabolic girder for uniform loads. The curve should approximately agree in shape with the B.M. curve, but not exactly, if the web is taken into account.

(*c*) and (*d*) Varying both the depth and the thickness of flange. If the top flange is curved we get the *hog-back* girder (*c*); and if the bottom flange is curved we get the *fish-belly* girder (*d*).

In most cases, method (*a*) is the most economical.

Digitized by Google

The curtailment of flange plates in method (*a*) may be obtained in the following manner:

Let A C B (Fig. 262) represent the B.M. curve on the girder of span A B. Draw a vertical through A to meet the horizontal tangent to the B.M. curve in D, and on any inclined line A *d*, set out points *a b c d*, &c., as follows:

A *d* = Total nett area of flange (+ $\frac{1}{6}$ area of web if this is being allowed for in the calculations).

d c = Nett area of top flange plate.

c b = Nett area of second flange plate.

b a = Nett area of third flange plate.

And so on until

A *a* = Nett area of bottom plate + tops of angles (+ $\frac{1}{6}$ area of web if allowed for).

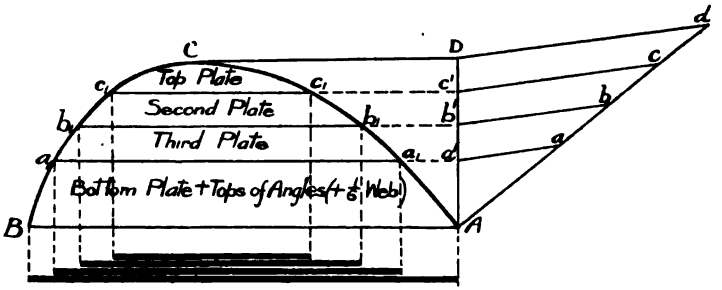

Fig. 262.—Curtailment of Flange Plates.

Join *a* D and draw *c c'*, *b b'*, *a a'* parallel to *d* D, and project the points *a' b' c'* horizontally to meet the B.M. curve in a_1 a_1, &c., then a_1 a_1, &c., give the necessary lengths of the flange plates, 6 ins. to 12 ins. being often allowed over these lengths.

In the hog-back and fish-belly girders we may proceed approximately as follows: Let A D B (Fig. 263) be the B.M. curve, the maximum depth of the girder at C being D. Let E F be any ordinate of the B.M. curve, the depth of the girder at E being D_1, and draw E F', so that $E F' = \frac{E F \times D}{D_1}$.

Digitized by Google

Points such as F′ when joined up give the corrected B.M. curve, which may then be treated exactly as in the previous case. It must be remembered, however, that in this method the web must be neglected, as it varies in area.

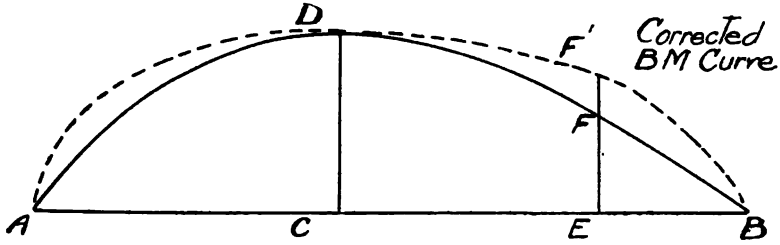

Fig. 263.

Flange Splices.—For lengths greater than 30 ft. the flange plates will often have to be spliced, but where the span is not

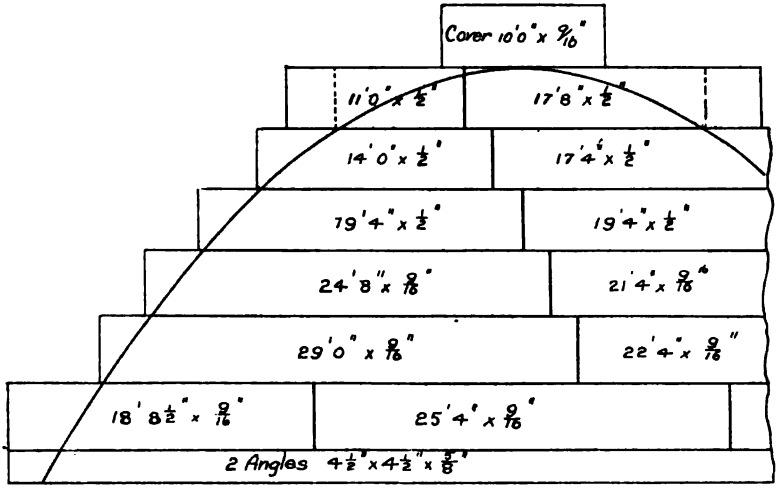

Fig. 264.—*Arrangement of Flange Splices.*

much over this, it will often be more economical to pay the extra price for the long plates than to provide a splice. In such cases there must be provided a cover at each splice, and the number of

Digitized by Google

rivets connecting to the cover must be such that their strength is equal to the plate being spliced.

The splices may often be very economically arranged in a zig-zag fashion with only one cover plate. The arrangement of splices is usually shown on the flange diagram, an example of which is shown in Fig. 264. In this case, one cover plate 10 ft. × $\frac{9}{16}$ in., serves as a cover for the first five plates, the covers for the two joints in the bottom plate being obtained by producing the top plate a short distance as shown.

When the flange angles have to be spliced, angles with rounded backs are riveted on to the inside of the angles at the joint.

Pitch of Rivets in Flanges.—The determination of the theoretical pitch of rivets required in the flanges of plate girders and between the flanges and web depends on the distribution of horizontal shear across the section, this subject being dealt with in Chap. X.

If the exact distribution be found in this way, then the number of rivets in, say, a foot length along the girder at a given depth must be sufficient to carry the shearing force at that depth over that length.

For plate girders the web is usually assumed to take all the shear which is assumed to be uniformly distributed over the web, and so on these assumptions the pitch of rivets is usually obtained simply in the following manner.

Consider the section of a plate girder between two points A and B at distance x apart, and let the B.M.s at A and B be M_A and M_B respectively, Fig. 265. Then if the web be neglected as regards bending, the total forces in the flanges at A and B may be taken as F_A and F_B respectively.

Then $F_A \times D$ = Resisting Moment at A = M_A

$F_B \times D$ = „ „ „ B = M_B

$$\therefore F_A - F_B = \frac{M_A}{D} - \frac{M_B}{D} \quad \ldots\ldots\ldots\ldots\ldots\ldots (1)$$

Now $F_A - F_B$ is the difference in the forces in the flanges between A and B, and this difference has to be transmitted to the web by the rivets, and therefore we have :

$$\text{Force to be borne in rivets on length } x = \frac{M_A - M_B}{D}$$

Digitized by Google

Now let R = least strength of one rivet in double shear or bearing, and let p = pitch of rivets in inches.

From (1), the number of rivets per foot length of the girder should be such that their strength is equal to $\frac{M_A - M_B}{x \cdot D}$, x being in feet.

But the number of rivets per ft. length $= \frac{12}{p}$

$$\therefore \frac{12\,R}{p} = \frac{M_A - M_B}{D \cdot x}$$

$$\text{or } p = \frac{12\,R\,x \cdot D}{M_A - M_B}$$

We proved on p. 124 that $\frac{M_A - M_B}{x}$ = rate of increase of B.M. = shearing force = S.

$\therefore$ We may write our result as $p = \frac{12\,R\,D}{S}$, D being in feet.

If D is in inches $p = \frac{R\,D}{S}$.

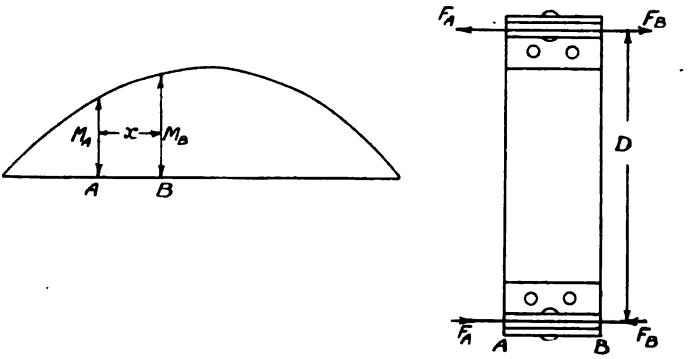

Fig. 265.—Pitch of Rivets in Plate Girders.

This is equivalent to the rule often given that 'the number of rivets over a length from one end of the girder equal to the depth should be such as to carry the reaction.'

The following numerical example on the finding of rivet pitch from the B.M. diagram should make the method clear.

Digitized by Google

Fig. 266 shows the B.M. curve for a girder of 50 ft. span and 4′ 2″ depth, carrying a uniformly distributed load of 195 tons, the max. B.M. being 1219 ft. tons. Consider points along the span 5 ft. apart and take $\frac{7}{8}$″ rivets with $\frac{5}{8}$″ web.

Then the least strength of each rivet will be in bearing, which at 10 tons per sq. in. comes $\frac{7}{8} \times \frac{5}{8} \times 10 = 5{\cdot}47$ tons.

Difference in B.M. over first 5 ft. = 420 ft. tons.

$$\therefore F_A - F_B = \frac{420}{4{\cdot}167} = 100{\cdot}8 \text{ tons.}$$

$$\therefore \text{Number of rivets in first 5 ft.} = \frac{100{\cdot}8}{5{\cdot}47} = 18{\cdot}4$$

$\therefore$ Say 3″ pitch.

Now consider next 5 ft. Difference of B.M. = 340 ft. tons.

$$\therefore \text{Number of rivets in next 5 ft.} = \frac{540}{4{\cdot}167 \times 5{\cdot}47} = 14{\cdot}9$$

$\therefore$ Say 4″ pitch.

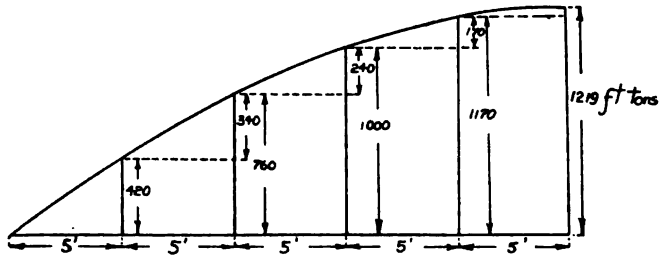

Fig. 266.

In this country it is customary to adopt 4″ pitch wherever the above calculation does not require less, and so further calculation is not necessary. If, however, a further increase in pitch is desirable, the calculations can be continued for the next 5 ft. and so on. In America it is quite common to go up to 6″ or even 8″ pitch, the pitch never being greater than 16 times the thickness of the flange plates. If a pitch less than 3″ is necessary two rows of rivets will be required, and for this at least a 5″ angle will be necessary.

The above method is admittedly full of assumptions not quite justifiable, but it gives results not far wrong compared with the more accurate and more troublesome method, and as rivet pitches

Digitized by Google

should never be worked out to fractions it is quite good enough in practice. The question is not really comparable with that of neglecting the web altogether in obtaining the flange thickness, because the saving of 1 inch in 4 inches on a rivet pitch is nothing like the saving of 1 inch on a 4 inch flange.

In making rivet calculations the designer should be careful that, if in the other calculations for the girder allowance is made for live load in obtaining the working stress, a similar allowance should be made in the working stresses for the rivets.

Design of Web and Web Stiffeners.—The web is assumed to have the shear uniformly distributed over it, and so the minimum area of web should be such as to keep the shear stress within safe limits.

If D is the depth of the web in inches, t its thickness in inches, f_s the safe shear stress, and S the shearing force at the given point,

We have $f_s \times t \times D = S$

$$\text{or } t = \frac{S}{f_s \cdot D}$$

In most cases this will be found to come quite small.

Thicknesses less than $\frac{3}{8}''$ are never used in practice to allow for rusting.

The thickness of web will often have to be increased at the ends beyond what is necessary for the shear stress, to provide sufficient bearing area to give a reasonable pitch to the rivets.

Buckling and Stiffening of Webs.—There has been much controversy on the subject of the buckling of webs. To prevent such buckling stiffeners are provided at intervals. Such stiffeners are often of the knee type, see Figs. 250 to 255, and consist of T bars bent to support the flanges and webs as shown. On the inside, if there are cross girders, short stiffeners are commonly provided riveted to the top of the cross girders, Fig. 252A, and sometimes these stiffeners consist of two angles with a gusset plate between them, this plate assisting in supporting the cross girder. In America it is common to cut the top flange plates off at the ends of the cross girders and produce the webs through, the produced portions then forming the plates between the two stiffeners.

There are some serious objections to the use of T section stif-

Digitized by Google

feners, L sections being much more satisfactory because they do not upset the rivet pitches as the T sections do. There appears to be no real reason except custom for the use of T stiffeners,

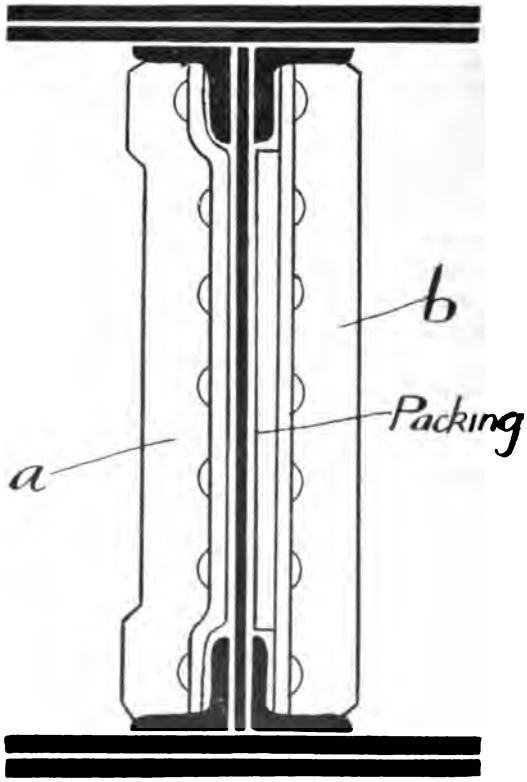

Fig. 267.—Stiffeners.

and so in most cases L sections are preferable. Many authorities state that it is quite unnecessary to provide stiffeners on both sides of the web.

Unless the flanges are very wide, or there is possibility of a twisting action on the girder, the knee stiffener is unnecessarily expensive, and the forms shown in Fig. 267 are quite satisfactory

Digitized by Google

in most cases. To save space we have shown the two different forms on the same girder. In form *a* the stiffener is joggled over the angles, while in form *b* the stiffener is straight and a packing strip is provided between it and the web.

In carrying out some tests on girders prior to the erection of the bridge over the Menai Straits, Fairbairn noticed that in one case failure occurred due to the buckling of the web at an angle of about 45°. As we showed on p. 12, a shear stress causes tensile and compressive stresses at right angles to each other and at 45° to the direction of the shear stress, so that the web buckles, due to the compressive component of the shear stress.

To make allowance for this it was first proposed to treat the web as a strut of length equal to the diagonal length of the panel, and diameter equal to its thickness, and work by Gordon's formula. Mr. Theo. Cooper, of New York, suggested a similar formula with different constants, the distance between stiffeners being taken instead of the diagonal length.

Cooper's formula for the shear stress to adopt in plate girder webs is:

$$\frac{\text{Shear in tons}}{\text{Area of web in sq. ins.}} = \frac{5}{1 + \frac{d^2}{1500\,t^2}} = f_s$$

Where d = distance apart of stiffeners in ins.

„ t = thickness of web in ins.

From this we can get the theoretical spacing of stiffeners if the thickness t is fixed.

$$i.e.,\ 5 = f_s\left(1 + \frac{d^2}{1500\,t^2}\right)$$

$$\therefore \frac{d^2}{1500\,t^2} = \frac{5}{f_s} - 1$$

$$\therefore d^2 = 1500\,t^2\left(\frac{5}{f} - 1\right)$$

$$\therefore d = 38{\cdot}7\,t\sqrt{\left(\frac{5}{f} - 1\right)}$$

In a very interesting paper in *Engineering*, Feb. 1st, 1907, Prof. W. E. Lilly, of Dublin, gives the results of some experiments on the buckling of webs, and deduces a formula agreeing almost exactly with the Cooper formula given above. He finds

Digitized by Google

the stresses in the stiffeners on the assumption that the web transmits half the shearing force by pure shear and half by tensile stress at 45°, obtaining the result, when the value of d is equal to the depth of the girder, that the area of cross section of the stiffeners should be equal to that of the web.

As the buckling takes place at 45°, it has been suggested that the stiffeners should be placed at 45°, but this is very seldom done in practice. The practice as regards stiffeners varies greatly. Some authorities place them at equal distances apart, equal to the depth, but this seems unsatisfactory, as the stiffeners should obviously be farther apart at the centre than at the ends of the girder. In all cases the stiffeners should be spaced so as to interfere as little as possible with the uniform spacing of the rivets.

In the *Engineering Record* (New York) of Oct. 7th, 1905, the specifications relating to stiffeners of a large number of bridge and railway companies are given, from which the following are taken to serve as a guide:—

CANADIAN PACIFIC RAILWAY.—If shear per sq. in. is greater than $\frac{1200}{1 + \frac{D^2}{3000\,t^2}}$, D being the depth in inches, stiffeners are placed at distances apart equal to the depth.

CHICAGO G.W. RAILWAY.—Stiffeners are placed at end bearings and at all points of concentrated loading, and are designed as columns to take the total shear.

NEW YORK CENTRAL AND HUDSON RIVER RAILWAY.—Spacing $= 60\,t\sqrt{\left(\frac{12{,}000}{f_s} - 1\right)}$; $f_s = \frac{\text{shear in lb.}}{\text{area of wet plate}}$. This is used for the spacing of stiffeners intermediate between concentrated loads, and if the spacing comes greater than the depth the stiffeners may be omitted. The bearing stress should be considered on end stiffeners.

WABASH RAILWAY.—$\frac{\text{Shear in lb.}}{\text{area}} = 12{,}000 - \frac{40\,d}{t}$.

When stiffeners carry load directly they are designed according to the rule $\frac{\text{Load in lb.}}{\text{area}} = 16{,}000 - 70\,\frac{l}{k}$, l being their length.

Digitized by Google

Digitized by Google

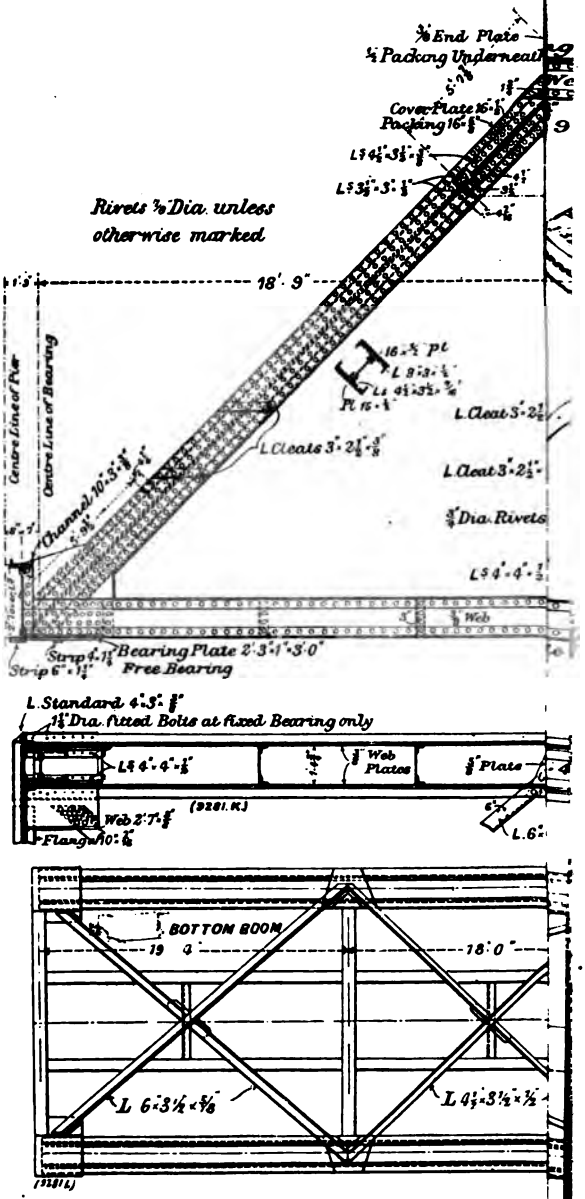

Digitized by Google

AMERICAN BRIDGE COMPANY.—Stiffeners to be placed on both sides with a close bearing against upper and lower flange angles at the ends and inner edges of bearing plates, and at all concentrated loads; and also, when $t < \frac{1}{60}$ unsupported distance between flange angles, at distances apart not greater than the depth of the full flange plate, the maximum limit being 5 ft

Curtailment of Webs and Web Splices.—In the same way that the flanges may be decreased in thickness as the B.M.

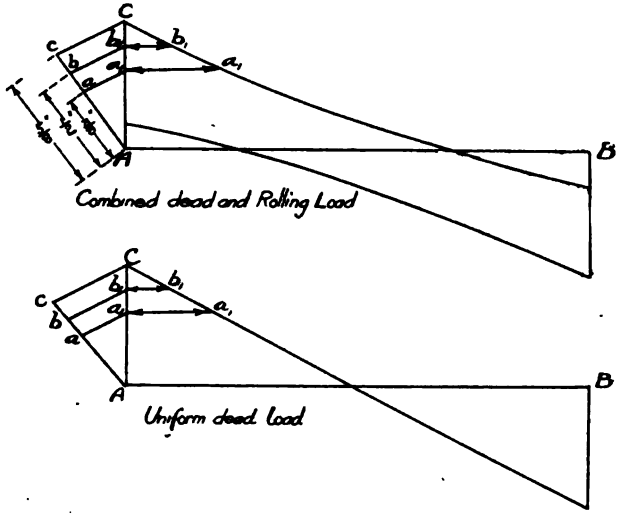

Fig. 268.—Web Splices.

decreases, the web may be decreased in thickness as the shear decreases. For small spans it is usual to keep the same thickness of web throughout, because packing strips have to be placed under the angles where the web thickness is reduced, and so the saving largely disappears. But for larger spans it is common to use two or three thicknesses of web, the thickest of course at the ends. The points at which to cut down the web can be obtained from the shear diagram in a similar manner to the similar problem in the case of the flanges.

Fig. 268 shows the construction for dead load and for a com-

Digitized by Google

bined rolling and dead load, and should be quite clear without further explanation.

The web splices should be arranged away from the flange splices, and the number of rivets on either side of the cover plate should be at least enough to carry the shear at the point, a T stiffener often serving as a satisfactory cover.

DESIGN OF FRAMED GIRDERS.

The economic depth of framed girders may be taken as about $\frac{1}{8}$ to $\frac{1}{10}$ of the span, although in America they are commonly built deeper than this. In this country both the compression and tension booms usually consist of a built-up channel or open-box section, diaphragms being placed at intervals; while in America the tension boom generally consists of pin-connected bars. Too much metal should not be placed in the web of the channel section or the centroid line will come too close to it to get the rivets in. The following examples from practice should make the detail design clear:—

Fig. 269 and Plate I. show a single track through Pratt-Truss bridge over the River Barrow near Waterford. These girders are of steelwork throughout, and the details are arranged so that no rain-water will be retained to involve risk of oxidation. This was found the more necessary, as the rainfall at the site of the bridge is excessive. The dimensions may thus be tabulated :—

	Ft.	ins.
Centres of bearings of main span	145	6
Centres of bearings of main span adjacent to swing-span	146	0
Centre of main girders apart	16	6
Length of main girders over all	147	6
Height in clear above rail-level for traffic ...	15	0
Width in clear	14	8
Depth of main girders over angles	20	0
Camber in the girder over each span	0	$1\frac{1}{2}$
Height of rail-level above Ordnance datum ...	44	0
Clear height from high-water level to underside of girders	26	0

Digitized by Google

(*Engineering.*)

Fig. 269.—*Bridge over River Barrow.*

To face p. 544.

Digitized by Google

Digitized by Google

The girder is constructed in eight bays, six of 18 ft. and two of 19 ft. 9 ins. An elevation of one half of it is given, plans showing the lateral bracing at the top and bottom respectively. The upper booms are of inverted trough section, with flange plates 2 ft. 3 ins. in width, and the lower booms are open at top and bottom, being without flange plates. The depth of both booms is 1 ft. 4 ins. over the angles. The side plates are stiffened by diaphragms, consisting of plates and angles. As shown, the webs of the main girders consist of diagonal and vertical members with raking end posts. The main struts are built of web plates and angle bars, and the remainder of angle bars and lattice bracing.

The main diagonal ties are 14 ins. in width, with two cast-iron distance stiffeners and bolts in each, the two centre bays in each girder having flat bar diagonal counterbracing, riveted in place after the erecting staging had been removed. The end raking posts are built up of single web plates, and double flange plates and angles. Gusset plates connect the ties and posts to the booms, as shown. The rivets throughout the main structure are $\frac{7}{8}$ in. in diameter and $\frac{3}{4}$ in. in the supplementary parts. The girders were built in sections at the shops in Glasgow, and dispatched to the site, where they were erected in position on wooden trestles placed on the temporary staging, the complete span being thus put together ready for lowering on to the bearings. The cross girders, as shown in plan, are at 18-ft. centres over the central and intermediate bays, and 18 ft. 9 ins. over the end bays, except in the end bays adjacent to the swing span, where they are 19 ft. 3 ins.

The bottom lateral bracing is shown on the plan, and consists of angles riveted to gusset plates at the base of the vertical posts. The top lateral bracing consists of lattice girders; this is, however, much more clearly shown in the perspective view, Fig. 269. The portal bracing here shown, erected at the ends of each span, forms the terminal member of the system of top lateral bracing, and forms the strap between the upper part of the raking posts. The lower ends of these raking posts are rigidly held together at the bottom, where they enter the trough of the bottom boom by the end cross girder. Each span, including steelwork, permanent way, &c., ready for traffic, weighs 156 tons.

Digitized by Google

Fig. 270 shows a skew through bridge truss of the hog-back N type on the L.B. & S.C. Railway at Streatham Common. One main girder is longer than the other, the respective lengths being 138 ft. 4 ins. and 132 ft. 8 ins. We show part elevation of the shorter girder, called girder A. The girders are 7 ft. 9½ ins. deep at the ends and 14 ft. 2 ins. at the centre. The longer is made up of fourteen bays, the shorter of thirteen bays. The bays in the centre are generally 10 ft. 4 ins., and are reduced at both ends in the case of girder B, and at one end in the case of girder A. The bottom booms consist of two plates on edge, 1 ft. 10 ins. apart and 1 ft. 4 ins. deep. At each bay these are stiffened by ⅜-in. plates and angles. There is no bottom plate to the boom, an arrangement introduced to prevent the collection of water; and, as will presently be explained, the transverse girders are suspended to projecting plates at the bottom boom under the vertical members forming the bays. The top boom is built up of plates and angles, forming an open box section. The width is 1 ft. 8¾ ins. internal, and 2 ft. 9 ins. over the flanges, the depth of the stiffening members being 1 ft. 4 ins. The struts forming the bays are 18¾ ins. wide, built up of ⅜-in. plates and angles. The bedstones on the abutment and intermediate pier are of ashlar.

The transverse girders carrying the permanent way are, as we have incidentally mentioned, suspended to the bottoms of the longitudinals. The angles forming part of the vertical struts of each bay of the main girder are continued below the line of the bottom boom, and are riveted on to the web plating of the transverse girders, the angle of the top flange of the cross girder being stopped short, while that of the bottom flange is continued through, and is cut at the bevel. The webs of the vertical struts of the longitudinal girders and those of the cross girders are connected together by cover plates, which also serve as packing. These cross girders are 26 ft. 4 ins. long and 1 ft. 6 ins. deep, the width over flange being 1 ft. 3 ins.; they are placed at intervals of 10 ft. 4 ins.—*i.e.*, corresponding with the bays of the bowstring girders.

On the bottom flange of the cross girders there rest two lines of longitudinal girders, one under each rail. These are built-up girders, 1 ft. 5¼ ins. deep, and suspended to the webs of these, by

Digitized by Google

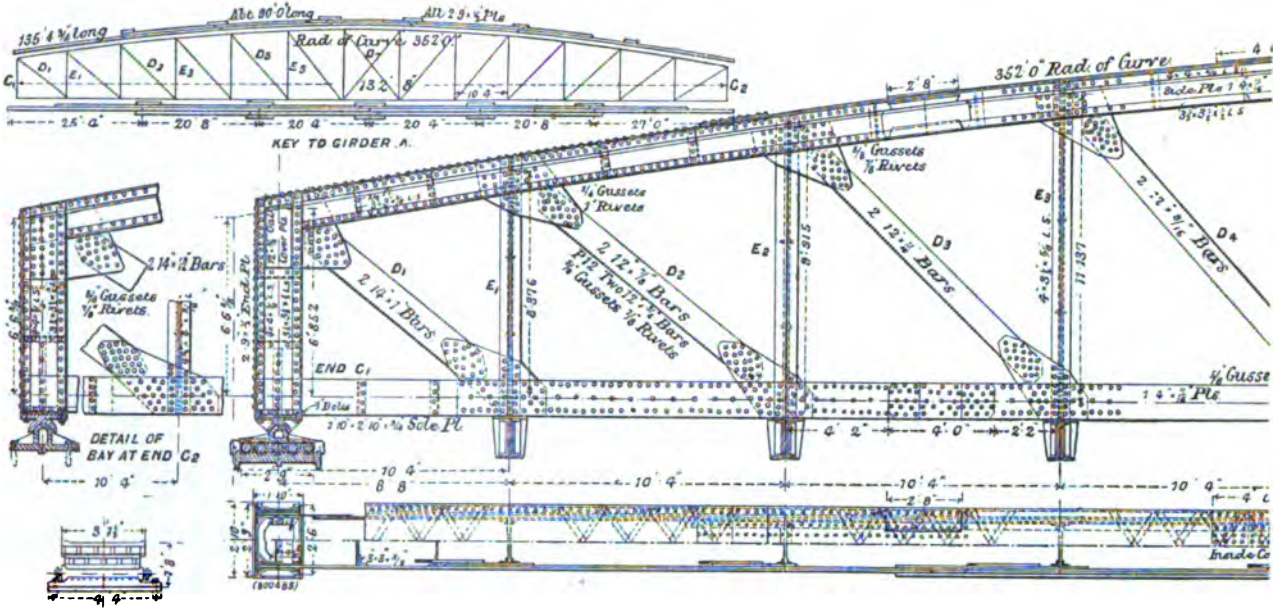

Fig. 270.—Hog-back 'N' Girder on L.B. and S.C. Railway. (*Engineering.*)

Digitized by Google

means of angles, is rolled troughing. Longitudinal sleepers are laid in the troughing to carry the rails. On either side there is laid a timber gangway, while on the remainder of the width between the main girders there is no decking whatever. At the end of the span, where the abutments come under one side of the cross girders, intermediate longitudinal girders are dispensed with, the troughing being stiffened by rolled joists under each alternate trough.

Wind bracing is riveted to the bottom of the main members of the bridge; it consists of flat plates riveted diagonally.

Figs. 271 and 272 show a deck bridge carrying the Caledonian Railway over the Clyde at Uddington. The main girders of the bridge are open-web girders of the N type, with a total length of 97 ft. 5 ins., and a depth of 11 ft. There is one main girder under each rail, so that each line of rails is carried on two girders, which are cross-braced at intervals of 21 ft. 4 ins. along the length of the bridge. Fig. 272 shows at the bottom a section of the top boom and an elevation of a joint in the top flange. The bottom boom is also of channel section. Between the main girders a decking of curved plates $\frac{1}{2}$ in. thick is riveted to carry the ballast. Between the two centre girders vertical cross bracing was purposely omitted, so that the stresses due to the live load coming on one line of rails would not be transmitted to the girders carrying the other line of rails, as would have happened had there been diagonal stays, as in the case of the adjacent girders under each separate line. All four girders, however, are connected together by the horizontal wind bracing. To allow of expansion, contraction, and deflexion, rocker bearings have been used for the main girders. One end of each girder is attached to a fixed bearing, and the other end to a movable one; but in order to balance on the piers the forces produced by alterations in the length of the girders due to variations in temperature, it was decided to have either movable or expansion bearings on each pier, and therefore the adjacent ends of girders are fitted with bearings of the same kind. Thus the expansion and contraction movement of the west and middle spans is taken up on the west river pier, as on it the expansion bearings are grouped. On the east river pier all the bearings are

Digitized by Google

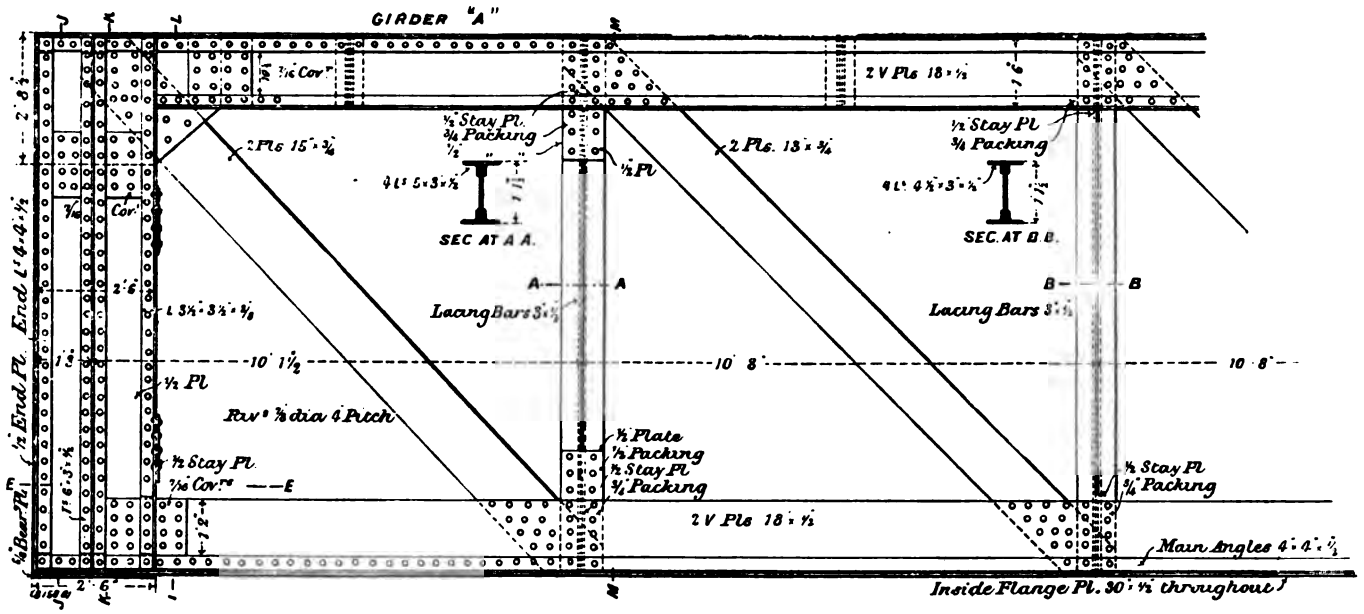

Fig. 271.—'N' Girder Bridge over River Clyde, Caledonian Railway. (*Engineering.*)

Digitized by Google

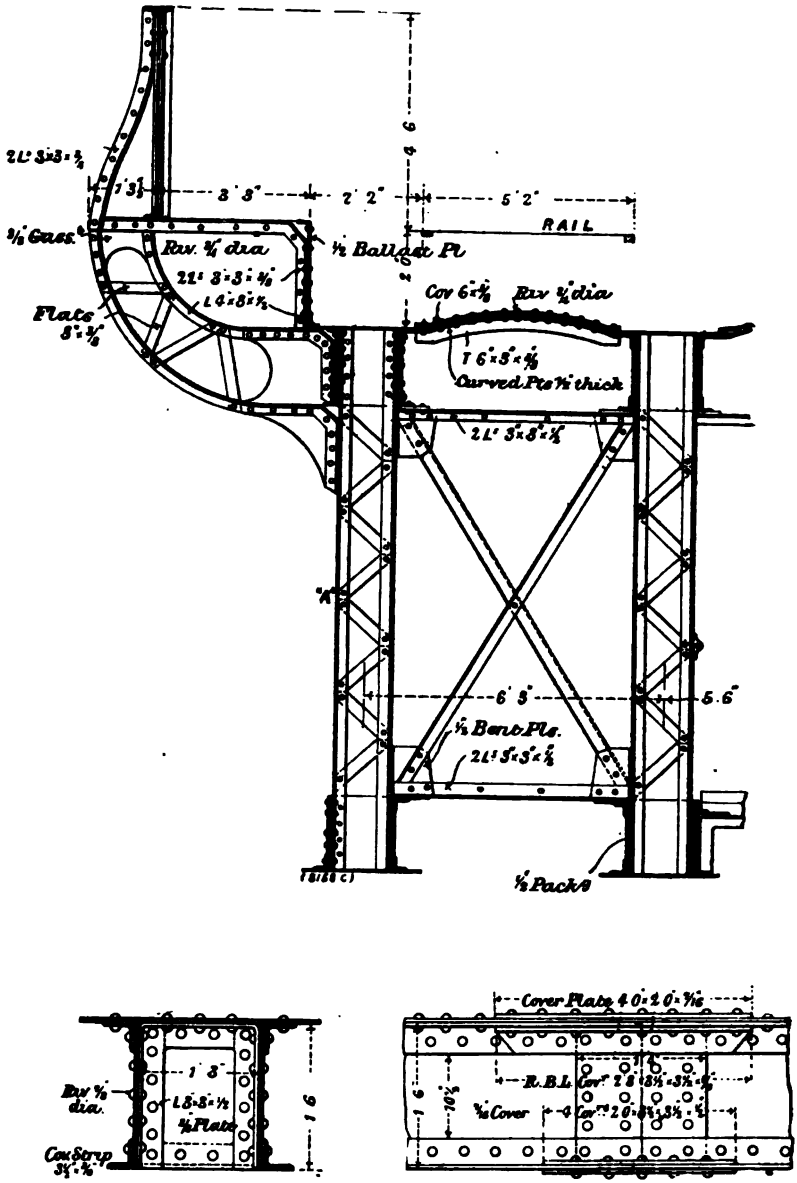

Fig. 272.—Bridge over River Clyde, Caledonian Railway. (*Engineering.*)

Digitized by Google

fixed, while on the east abutment again there are expansion bearings.

The bearings are bolted to heavy granite blocks on the piers or abutments. A footway is provided on each side of the bridge, and is illustrated by Fig. 272. It is formed of timber, supported by brackets riveted, as shown, to the outside main girders. The parapet girder is of the close lattice type, and, while self-supporting, is further kept rigidly in position by means of the footway brackets. The ballast-retaining plate is used for supporting the gangway. The upper surface of the curved plate flooring of the bridge is covered with a fine concrete rendering 3 ins. thick, which in turn is covered by $1\frac{1}{2}$ in. of asphalt; gutters are formed along the ballast plates with weep-pipes at every alternate bracket supporting the parapet. Similar precautions have been taken to prevent corrosion in the case of the bottom booms of the main girders, which are closed, and are therefore likely to collect water.

DESIGN OF A THREE-PINNED ARCH.

We have in Chapter XIII. dealt with the calculations for thrust and B.M. in arched ribs. The detail design does not differ in very great respect, once the calculations have been made, from ordinary girders. In Plate II. we show details of a three-pinned arch for a road bridge erected in March, 1905, over the River Exe at Exeter.

To obviate any obstruction in the river, a single span was necessary; and in order to improve the gradients, and at the same time to afford the necessary headway under the bridge, the system known as the 'three-hinged arch' was adopted, the constructional depth available at the centre being only 3 ft. 5 ins. This enabled the rise to be restricted to 11 ft. $4\frac{1}{2}$ ins., and gave 15 ft. of headway above the ordinary water-level.

The arch at the same time is an exceptionally flat one, the ratio of rise to span being only 1 to 13·2; indeed, it is probably the flattest in this country. This is due to the circumstance that the springings had to be kept as far above the water-level as possible, in order not to interfere with the flow of the river in

Digitized by Google

flood. Notwithstanding the falling gradient, a symmetrical appearance has been preserved in the elevation. This has been accomplished by the treatment of the fascia work. The spandrils on the two sides of the bridge are approximately the same size, but the ornamental parapet has been made higher above the footway at the south end than at the north, so that the height from springing level to the top of the parapet is practically the same at each abutment. Thus the appearance presented does not partake of the inequality which would otherwise have been the case owing to the difference in level at the two ends of the bridge.

The arch ribs, eight in number, are of steel, with a hinge at each abutment and in the centre. The thrust of the ribs is taken by heavy cast-iron bed plates abutting on to massive granite bed stones, embedded in the concrete of the abutments. These abutments have been constructed of considerable thickness, to withstand the thrust due to the flatness of the arch. On the north side the abutment is 33 ft. from front to back, and on the south side 36 ft.

The foundations are on red shale underlying a bed of gravel. The work of removing the abutments of the old bridge and constructing those for the new was carried out within cofferdams built of a single row of whole timber sheeting. The abutments themselves are of Portland-cement concrete faced with brindle brickwork, but the cutwaters and the exposed portions of the abutments are of granite ashlar masonry.

The ribs vary in depth, being 2 ft. 2 ins. at the centre of the span and at the abutments, swelling out to 4 ft. 6 ins. at the haunches. The flanges of the ribs consist of two plates, 18 in. by $\frac{1}{2}$ in., connected to the webs by means of angle-irons 4 ins. by 4 ins. by $\frac{1}{2}$ in. The webs are $\frac{1}{2}$ in. thick at the middle of the half-arch, increased to $\frac{3}{4}$ in. at the centre of span and at the abutments, where the thrust is transmitted through the hinges. These hinges consist of hard-steel pins, 8 ins. in diameter and 11 ins. long, working in cast-steel collars secured to the webs of the ribs by cast-steel angle brackets. The ribs and columns are braced together vertically by a system of angle-bar bracing, $3\frac{1}{2}$ ins. by $3\frac{1}{2}$ ins. by $\frac{1}{2}$ in., opposite the points where the cross girders are carried, while $\frac{1}{2}$-in. stiffening plates are introduced at intervals of

Digitized by Google

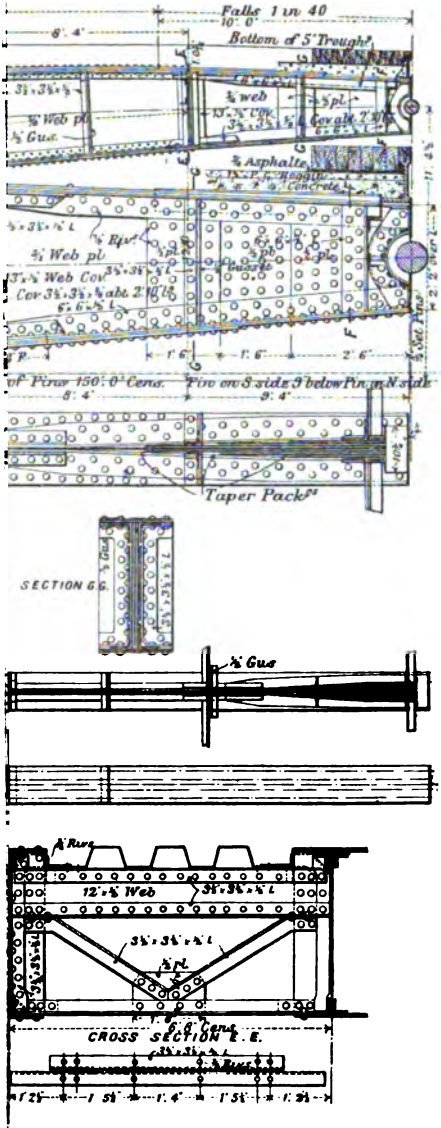

(*Engineering.*)

To face page 552.

Digitized by Google

Digitized by Google

about 4 ft. 2 ins. along the ribs. Diagonal lateral bracing was also introduced in order to stiffen the bridge against wind pressure, and against the shock due to the possible impact of floating objects coming down with spates.

Each half-arch was brought to the site in two pieces, and as each segment, extending from abutment to centre pin, weighed about 13 tons, the heaviest load dealt with by the steam-derrick cranes in use was about 6½ tons. At the point of junction cover-plates and angles were riveted on the top and bottom flanges, as shown. The ribs were temporarily supported during erection on timber staging, carried partly on the piers of the old bridge, which were left in place for the purpose.

The expansion joints at the abutments and in the centre consist each of two cast-iron kerbs, ½ in. apart, having a checkered steel rubbing-piece screwed on to the top flange, which is cambered to the curve of the roadway. It is anticipated that, with the extreme range of temperature, the extent of rise and fall will not exceed 3 ins. at the centre of the bridge—that is to say, 1½ ins. on each side of the normal. This, of course, is provided for by the hinges.

The cross girders consist of rolled steel joists, 10 ins. by 5 ins., and these rest on rolled steel columns, 6 ins. by 5 ins., which transfer the load to the ribs. These columns or posts vary in height, attaining their maximum at the abutment, and decreasing towards the centre. Near the centre, where, owing to the restriction in height, the ribs intersect the troughing carrying the roadway, the cross girders are built of angles and webs running intercostally between the ribs.

The flooring consists of 5-in. by ⅜-in. steel troughing, resting on the cross girders, and running longitudinally, an arrangement which enabled the troughing in the centre to be laid between the ribs. Over the troughing is 6 ins. of coke breeze concrete, in the proportion of 6 to 1, adopted in preference to ordinary ballast concrete in order to reduce the load on the bridge. The top of the concrete is overlaid with Portland-cement rendering, 1½ ins. thick, and over this again is ¾ in. of asphalt laid in two layers, with brattice cloth between them; 6-in. jarrah setts complete the surface. The approaches to the bridge are paved with 4-in. jarrah

Digitized by Google

blocks. Gas and water mains are carried under the footpaths, the gas-mains being self-supporting between the cross girders, while the water mains rest on the floor plate under the footway. The City of Exeter new electric tramway runs across the bridge on two lines of rails resting on the concrete.

The clear width of the roadway between the kerbs, is 34 ft., while the footpaths are each 8 ft. wide, so that the total width of the bridge between parapets is 50 ft.

TRANSVERSE AND LATERAL BRACING ON BRIDGES.

In the examples that we have just given of various bridges from practice, the transverse and lateral bracings are indicated. The *transverse bracing* is in a vertical plane, and in deck bridges

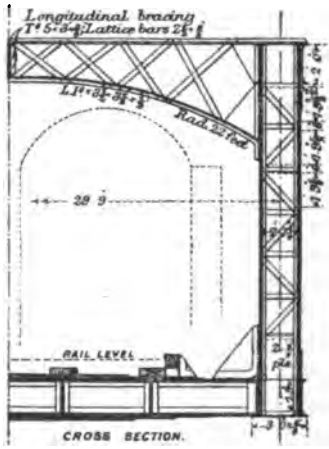

Fig. 272*a*.

usually takes the form shown in Figs. 250, 272. It is best to brace such girders in pairs for the same line only, as otherwise there is a twisting action on one pair when the train is on the other; in road bridges, however, they may be braced right across. Such transverse bracing is usually placed at the ends and at inter-

Digitized by Google

mediate points at distances apart equal to about twice the distance between the main girders.

The *lateral bracing* is in a horizontal plane, and is usually arranged as shown in Figs. 269, 272A, and Plate I., in the form of a Warren or **N** girder. Such bracing is designed to carry the horizontal loads due to wind and to centrifugal force when the bridge is on a curve. The rules for the wind pressure for this bracing may be taken from the Board of Trade recommendations given on p. 50.

A common American rule is to design the top and bottom lateral bracing systems for a static load of 150 lb. per linear ft., and to add to the system connected to the loaded flanges a moving wind load on the train of 300 lb. per linear ft.

Another American rule is to design as follows:—Wind on train treated as moving load of 300 lb. per linear ft., and a dead load of 50 lb. per sq. ft. of exposed area. The exposed area is taken as twice the area in elevation, and one-third of the loads are taken as carried by the bracing at unloaded side and two-thirds at loaded side.

Portal bracing is usually provided at the top in through girders, the cross girders serving this purpose at the bottom. This often takes the form of small lattice girders, and is shown well in Figs. 269 and *272a*.

BEARINGS FOR BRIDGES.

In designing bearings for bridges the area of the bedstone or template is obtained from the safe load on the masonry or other support, this being obtained as described in Chapter XVI. with reference to foundations.

For spans less than 70 feet it is not customary to provide bearings with special means for allowing expansion. In such cases a bearing plate is riveted with countersunk rivets on the bottom of the girder, which is commonly then simply rested on the stone templates, double or treble thicknesses of hair-felt, or sometimes sheet lead, being placed between the bearing plate and the template to distribute the pressure uniformly, Fig. 273 showing such an arrangement.

Digitized by Google

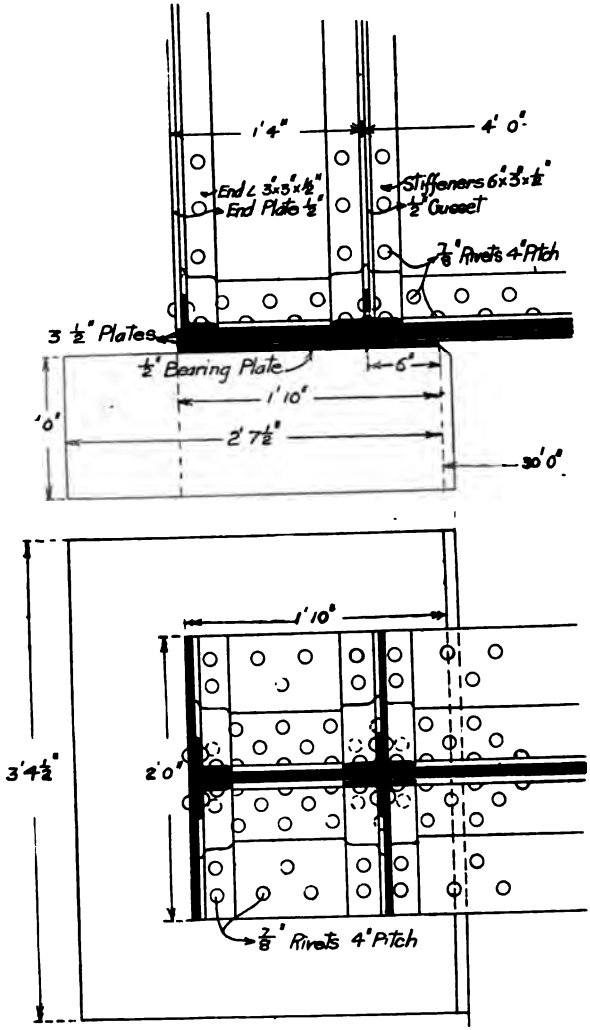

Fig. 273.—Girder Bearings.

Digitized by Google

The front end of the template should be chamfered to prevent chipping, and in skew spans the bearings should be arranged at right angles to the girders, and should not follow the angle of the skew.

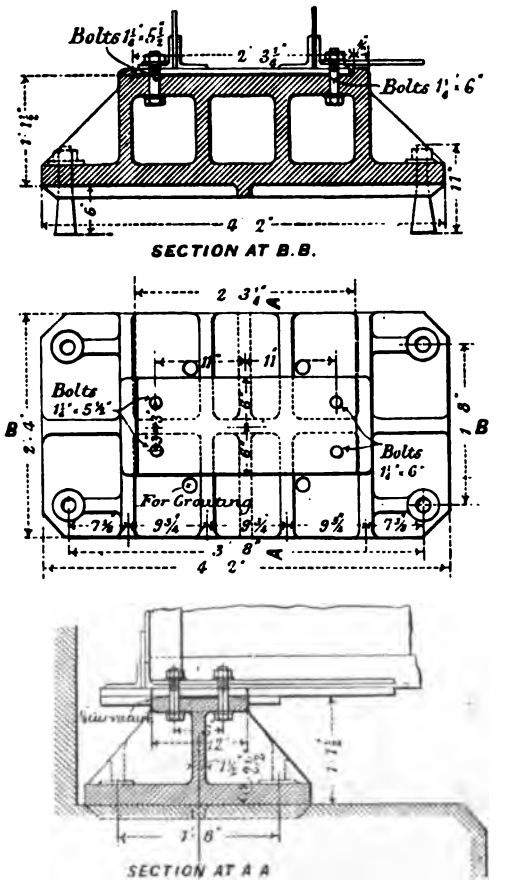

(*Engineering.*)

Fig. 274.—Bearing at Fixed End.

In some cases the bearing plate is held down to the template with Lewis bolts, the holes at one end being slotted to allow for

Digitized by Google

expansion, but such fixing is now not common, and experience shows that it is often unsatisfactory. An arrangement which many engineers consider to be better is to bolt a cast iron or a

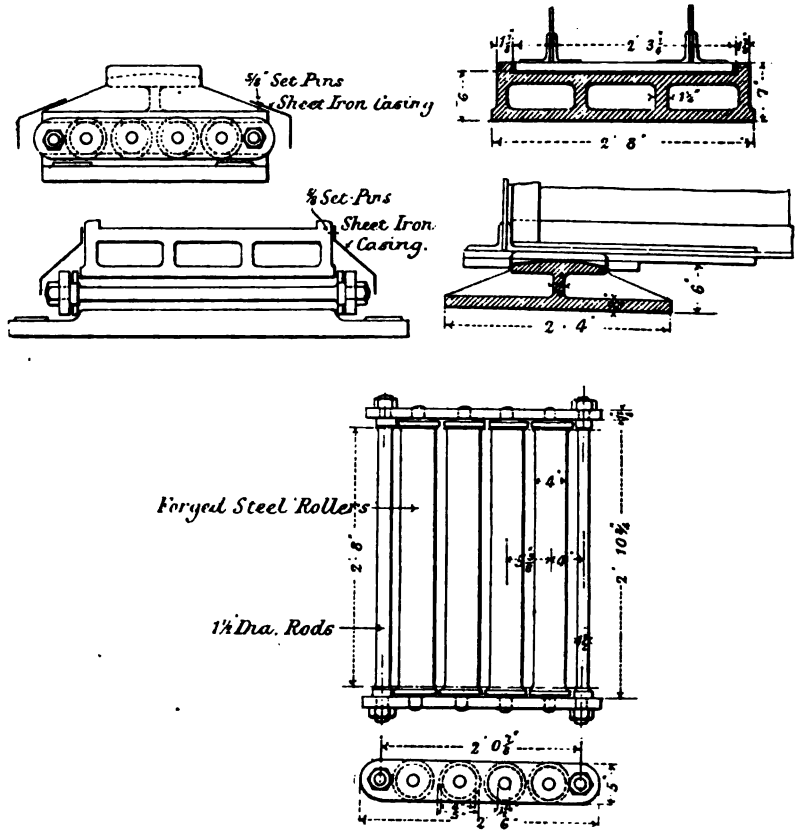

(*Engineering.*)

Fig. 275.—Bearing at Free End.

steel plate down to the template and to rivet a short knuckle plate to the girder. This fixes the span more exactly, and prevents the pressure from coming on the edge.

For larger spans it is desirable to provide expansion bearings.

Digitized by Google

For such bearings to be satisfactory they must be combined *rocker* and *expansion* bearings.

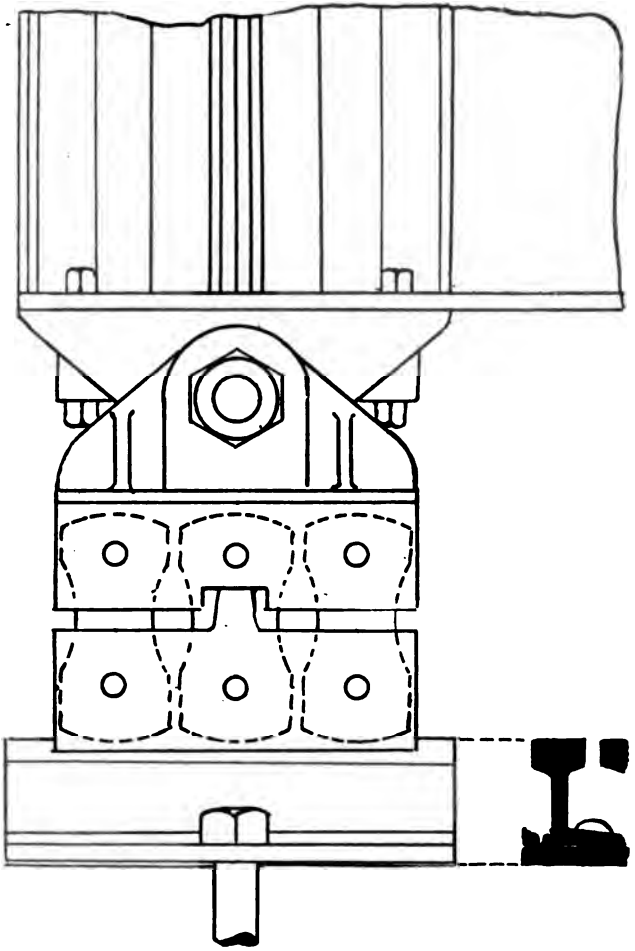

Fig. 276.—Combined Rocker and Roller Bearing.

The function of the rocker is to allow the girder to deflect under the load and still transmit the pressure centrally to the

Digitized by Google

template, while the expansion bearings or rollers are to allow freedom of movement due to expansion.

Figs. 274, 275, show the bearings used for the fixed and expansion ends of the bridge shown in Plate I.

Fig. 276 shows a combined rocker and roller bearing used on an American railway. In this case the expansion is obtained by segmental rollers of the form shown. The roller cage rests on a bed of rails, planed at the top and with one flange planed off, these being riveted to a bearing plate, and sheet lead being interposed between the latter and the masonry. In all cases, the rollers, &c., should be provided with end plates for maintaining them at fixed distances apart.

In all expansion bearings, care should be taken that they are designed so as to be accessible for lubrication and inspection.

Digitized by Google

EXERCISES.

[*These Exercises should be worked by the student in addition to those worked in the text. In many cases, in particular reciprocal figures, so many are worked in the text that none have been included here.*]

CHAPTER I.

1. A tie rod in a roof structure has to stand a total pull of 40 tons. If the stress in the material is to be not greater than 5 tons per sq. in., find a suitable diameter. *Ans.* $3\frac{1}{4}$ *ins. diam.*

2. Taking the shearing strength of mild steel to be 20 tons per sq. in., calculate the force necessary to punch a $\frac{3}{4}$ in. hole in a $\frac{5}{8}$ in. plate. Find also the stress in the punch.
Ans. 29·4 *tons;* 66·7 *tons per sq. in.*

3. A bar of mild steel $\frac{3}{4}$ in. diam. and 10 in. long stretches ·00816 in. when carrying a load of 5 tons. Calculate Young's modulus (E) in lb. per sq. in. *Ans.* 30×10^6 *lb. per sq. in.*

4. If E is 29,000,000 lb. per sq. in. for wrought iron, what decrease in length of a column 20 ft. high and 12 sq. ins. sectional area takes place when carrying a load of 36 tons? *Ans.* ·0556 *in.*

5. What load in lb. is hung on an iron wire 50 ft. long and 1 in. diameter to make it stretch $\frac{1}{5000}$ in.? *Ans.* ·076 *lb.*

6. Plot a stress-strain diagram for the following test of a specimen from a mild-steel boiler plate :—

Load lb. ...	4,000	8,000	12,000	16,000	20,000	24,000	28,000
Extenⁿ ins.	·0009	·0020	·0033	·0044	·0056	·0070	·0082

Load lb. ...	30,000	34,000	36,000	40,000	44,000	48,000	52,000
Extenⁿ ins.	·0103	·016	0·7	·19	·30	·47	·75

Load lb. ...	56,000	59,780	64,900	Scales { Loads—1″ = 1000 lb. Extensions—up to yield point 500 times full size. Beyond = 4 times do.
Extenⁿ ins.	1·3	2·5	2·9	

Orig. dimens. Length = 10 ins., width = 1·753 ins., thickness = ·64 in.
Final „ „ = 12·9 ins., „ = 1·472 ins., „ = ·482 in.

Digitized by Google

Find stress at elastic limit, maximum stress, Young's modulus, and percentage extension and reduction of area.

7. In a plate girder the maximum intensity of stress at right angles to the vertical cross section of the web is 5 tons per sq. in., and the intensity of shearing stress is 2 tons per sq. in. Find the position of the planes of principal stress at that point and their intensities. (A.M.I.C.E. Feb. 1905.)

Ans. 19° 20′ *and* 70° 40′ *to vertical;* 5·7 *and* 0·7 *tons per sq. in.*

8. The limit of elasticity of a W.I. bar was found to be 20,000 lb. per sq. in., the strain at that point being 0·0006; what was the resilience of the material? (A.M.I.C.E. Oct. 1906.)

Ans. 12 *in. lb.*

CHAPTER II.

1. In a roof truss a certain tie has in it a pull of 3·05 tons due to the dead weight *alone*. When the wind is on the left of the truss it *alone* causes a pull of 5·5 tons in the same tie, and when it is on the right side it causes a compression of 1·2 tons. Work out what you would consider a satisfactory section for the tie if it is made of mild steel. *Ans.* 3 *ins.* × $\frac{3}{4}$ *in. flat.*

CHAPTER III.

1. Find the moment of inertia about the centroid of an I beam 8 ins. deep, the width of flanges being 5 ins. The flanges are ·575 in. and the web ·35 in. thick. *Ans.* 89·1 *in. units.*

2. A stanchion section consists of two standard channels 11 ins. × $3\frac{1}{2}$ ins. placed back to back at $6\frac{1}{2}$ ins. apart and two 14 ins. × $\frac{1}{2}$ in. plates riveted to each flange. Find the least radius of gyration. *Ans.* 4·12 *ins.*

3. A girder 70 ft. long carries a uniform load of 2 tons per lineal foot from one end to the middle, and a load of 20 tons at 20 ft. from each end. What are the reactions on the ends? (A.M.I.C.E. Feb. 1903.) *Ans.* 72·5, 37·5 *tons.*

4. A cast-iron girder has an upper flange 4 ins. by 1 in.; a lower flange 8 ins. by $1\frac{1}{2}$ ins. and a web 6 ins. by 1 in. Find its moment of inertia and radius of gyration about an axis through the centroid parallel to the flanges. *Ans.* 195 *ins.*^{4}; 2·98 *ins.*

5. A channel section has a base of 10 ins.; sides 3 ins.; the thickness of metal being $\frac{3}{4}$ in. Find the position of the centroid and the moment of inertia about a line through the centroid parallel to the base. *Ans.* ·726 *in. from base;* 6·62 *ins.*^{4}

Digitized by Google

CHAPTER IV.

1. Two lengths of a flat steel tie bar, which has to carry a load of 50 tons, are connected together by a double butt joint. The thickness of the plate is $\frac{3}{4}$ in. Find the diameter and the number of rivets required, and the necessary width of the bar for both chain and zigzag riveting. What is the efficiency of each and the working bearing pressure. Make a dimensioned sketch of the joint.

2. A diagonal tie in a lattice girder has to carry a load of $15\frac{1}{2}$ tons and is $\frac{1}{2}$ in. thick. Using $\frac{3}{4}$ in. rivets, find the necessary width of tie and calculate the number of rivets required (in single shear) and sketch the arrangement.

3. Explain how to design a double-riveted lap joint to connect two steel plates $\frac{1}{3}$ in. thick with steel rivets, the tensile strength of the plates before drilling being 30 tons per sq. in.; the shearing strength of the rivets 24 tons per sq. in., and the compressive strength of the steel 43 tons per sq. in. Find the efficiency of the joint. (A.M.I.C.E. Oct. 1903.) *Ans.* $d = \frac{7}{8}$ *in.* $p = 3\frac{5}{8}$ *ins.* $\eta = 53\%$.

4. For equal strengths in tension and shear calculate the pitch for a butt joint, given the following data: Plates 1 in. thick; rivets $1\frac{1}{4}$ ins. diam.; two rows of rivets on each side of joint; $f_s = 54.000$; $f_t = 65{,}000$ lb. per sq. in. *Ans.* $5\frac{5}{8}$ *ins.*

CHAPTER V.

1. A cantilever whose weight may be neglected, carries isolated loads of 2 tons and $\frac{1}{2}$ ton at distances of 5 ft. and 8 ft. respectively from its built-in end, the cantilever being 10 ft. long. Sketch shear and B.M. diagrams. *Ans. Max. B.M.* = 14 *ft. tons*; *shear* = $2\frac{1}{2}$ *tons.*

2. A certain joist used as a cantilever weighs 18 lb. per foot, and the max. B.M. which it can carry is 63·56 in. tons. Find how long the span may be for the cantilever to be able to safely sustain its own weight. *Ans.* 36·3 *ft.*

3. A beam of 12 ft. span carries loads of 3 and 4 tons at distances of 5 and 8 ft. from the left-hand support. Draw the shear and B.M. curves.

Ans. Max. B.M. = 15·66 *ft. tons; reaction*, 3·91 *and* 3·09 *tons.*

4. A plate girder is built of depth = $\frac{1}{12}$ span. The maximum permissible B.M. in ft. tons in such girder is roughly given by formula:—B.M. = 7 × area of flange in inches × depth in feet. Find the maximum span for such a girder to carry its own weight: (*a*) neglecting its web altogether; (*b*) taking its web as half the sectional area of one flange. Neglect all angles, rivets, and stiffeners. Take steel as weighing 490 lb. per cub. ft. *Ans.* (*a*) 1536 *ft.*; (*b*) 1229 *ft.*

Digitized by Google

5. A beam of 25 ft. span carries a load of ½ ton per foot run, and an isolated load of 6 tons at a distance of 4 ft. from the left-hand support. Find the maximum bending moment, and sketch the shear and B.M. curves. *Ans. Max. B.M.* = 52·2 *ft. tons.*

6. A beam 25 ft. long is anchored down at one end and rests over a support 6 ft. from the other end. It carries a load of 15 tons at the free end, and a uniform load of 5 cwt. per foot run. Sketch the shear and bending moment curves. *Ans. Max. B.M.* = 96·5 *ft. tons.*

7. A bridge is supported on pontoons, each of which is 24 ft. long, and is of uniform cross section, and weighs 1000 lb. uniformly distributed. The weight of the bridge platform is carried by the pontoons between $\frac{1}{8}$ to $\frac{1}{3}$, and $\frac{2}{3}$ to $\frac{5}{8}$ of their lengths. Upon these portions the downward pressures are 1500 lb. per foot run. Draw the curves of shear and bending moments. *Ans. Max. B.M.* = 6000 *ft. lb.*

8. A beam is laid horizontally upon two supports which are 12 ft. apart, and projects at each end 6 ft. beyond the support. A load of 2 tons is carried upon each of the projecting ends, and 1 ton at the centre of the span. What is the B.M. at the centre and at each support? Sketch the B.M. diagram. (A.M.I.C.E. Feb. 1901.)
Ans. 9 *ft tons;* 12 *ft. tons.*

CHAPTER VI.

1. A 20 in. × 7⅛ in. joist is supported at both ends. The weight per ft. of this section is 89 lb., and the moment of inertia = 1646 ins.⁴ Find the distributed load in a 25 ft. span which will cause a max. flange stress of 7 tons per sq. in. *Ans.* 29·7 *tons net.*

2. The moment of inertia of a 12 in. × 5 in. × 32 lb. joist is 221 ins.⁴ Two such joists are placed side by side, and support a water-tank which weighs 1 ton when empty. Effective span = 15 ft. What is the weight of the water in the tank when the stress in the extreme fibres of the joist is 6·5 tons per sq. in. *Ans.* 19·8 *tons.*

3. Two 6 × 3 × ½ T's are used back to back as a girder on which a light crane runs. Compare the safe load which such a beam would carry with that of a joist of same span, depth, width, and thickness of metal. *Ans. Joist* 5·36 *times as good.*

4. A cast-iron beam section is 20 ins. deep; top flange 4 ins. × 1 in.; bottom flange, 16 ins. × 1¼ ins.; web, 1 in. Find the safe distributed load which a cast-iron girder of the above section, and of 20 ft. span, could safely carry. Take the safe stresses as 1 ton/in.² in tension, and 4 tons/in.² in compression.
Ans. 10·6 *tons net;* 11·9 *tons gross.*

5. A rolled-steel joist 16 ins. deep, with flanges 6 ins. wide and 1 in. thick (the web being ¾ in. thick), is used to support a uniformly distributed load of 2 tons per ft. run. If the span is 12 ft. 6 ins., what is the maximum stress in the lower flange? (A.M.I.C.E.)
Ans. 4·42 *tons per sq. in.*

Digitized by Google

6. A tie bar 9 ins. wide and $1\frac{1}{8}$ ins. thick is curved in the plane of its width. If there is a total tensile load on the bar of 30 tons, and if the mean line of pull passes 3 ins. to one side of the geometrical axis at the middle of the bar, find the maximum and minimum stresses at the centre section of the bar. (A.M.I.C.E.)

Ans. $6\frac{2}{3}$ *tons per sq. in. tension;* $2\frac{2}{3}$ *tons per sq. in. compression.*

7. Either of the following sections is available for a beam which is required to be as strong as possible: (*a*) Circular, 2 in. diam.; (*b*) rectangular, 2 in. deep, 1·178 in. wide. Which would you use? (A.M.I.C.E. Feb. 1906.) *Ans. Circular.*

8. A short wooden pillar is 20 ins. high, and rectangular in cross section, the thickness of the section is 6 ins., and the width 12 ins. Two vertical loads act on the top of the pillar, both loads act in the middle of the thickness, one of them, W_1, acts at a point $1\frac{1}{2}$ ins. on one side of the centre, and the other, W_2, acts at a point $2\frac{1}{2}$ ins. on the other side of the centre. If the stress over the base of the pillar is everywhere compressive and varies uniformly, its intensity being twice as great at the 6 in. edge near the line of action of W_2 as it is at the 6 in. edge near the line of action of W_1, what is the ratio of W_2 to W_1? (B.Sc. Lond. 1905.)

CHAPTER VII.

1. A beam 80 ft. span, weighing 1 ton per foot run, carries a rolling load of two tons per foot run. The rolling load covers a distance of 10 ft. Draw, roughly to scale, the curves of maximum, positive, and negative shearing force as the load crosses over; and show also that the bending moment is a maximum at any section when the section divides the load and the beam into segments having the same ratio. (B.Sc. Lond. 1906.)

2. Two loads, spaced 6 ft. apart, roll over a girder of 40 ft. span. If the leading load is 8 tons, and the other 5 tons, find: (*a*) The maximum bending moment in foot tons on the girder; (*b*) The maximum shear in tons. (B.Sc. Lond. 1907.)

3. A train equivalent to a rolling load of $1\frac{1}{2}$ tons per ft. run traverses a girder of 150 ft. span. Draw diagrams of maximum possible B.M. and shear, (*a*) when the length of the rolling load exceeds the span, (*b*) when it is only 75 ft. in length. (B.Sc. Lond. 1904.)

4. A girder crossing a span of 400 ft. is traversed by a railway train of uniform weight 1 ton per ft.; and the train, whose length is greater than the span, may enter from either end. Find the greatest positive and negative values of the resulting shearing at a section 100 ft. from either abutment, and sketch the diagram of maxima. (A.M.I.C.E. Oct. 1905.) *Ans.* $\pm$ 112·5; $\mp$ 12·5 *tons.*

Digitized by Google

5. A girder of length 60 ft. is subjected to a uniformly distributed load of $\frac{3}{4}$ ton per ft. run, and to a uniformly distributed rolling load of $1\frac{1}{2}$ tons per ft. run. Construct diagrams to show for every section of the girder (*a*) the shearing stress due to the dead load; (*b*) the maximum positive and negative shearing stresses due to the rolling load as it crosses the girder. (A.M.I.C.E. Oct. 1903.)

Ans. (1) 22·5 *tons;* (2) 45 *tons at ends.*

CHAPTER VIII.

1. If two precisely similar beams of rectangular section, one of cast iron and the other of wrought iron, were laid across the same span and loaded with the same load (within the elastic limit), what would be the relative deflections of the two beams? (A.M.I.C.E. Feb. 1901.) *Ans.* As $E_c : E_w$ = *about* 8 : 13.

2. A beam is of 20 ft. span and the movement of inertia of its section is 300 ins. units; what will be the central deflection for a uniformly distributed load of 16 tons? (A.M.I.C.E. Feb. 1901.)

Ans. ·72 *in.*

3. A beam of cast iron, 1 in. broad and 2 ins. deep, is tested upon supports 3 ft. apart, and shows a deflection of $\frac{1}{4}$ in. under a central load of 1 ton. Calculate the modulus E. (A.M.I.C.E. Feb. 1901.)

Ans. 5832 *tons per sq. in.*

4. Suppose that three beams or planks, A, B, and C, of the same material are laid side by side across a span L = 100 ins., and a load W = 600 lb. is laid across them at the centre of the span so that they all bend together. The beams are all 6 ins. wide, but two are 3 ins. and one 6 ins. deep. What will be the load carried by each beam, and what will be the extreme fibre stress in each? (A.M.I.C.E. Feb. 1905.) *Ans.* 480 *lb.*, 60 *lb.;* 1333 *lb. per sq. in.*, 667 *lb. per sq. in.*

5. An I girder, flanges 6 ins. × $\frac{3}{4}$ in., web $\frac{1}{2}$ in. thick, depth over all 10 ins., is supported at the ends, and has a span of 15 ft. It carries a concentrated load of 6 tons placed at a place 5 ft. from one support. Calculate the deflection of the beam due to this load at a section immediately below it, and also the work done in bending the beam. (B.Sc. Lond. 1907.)

6. A beam of uniformly rectangular section is supported freely at the ends and carries a uniformly distributed load. Find the ratio of depth of span so that when the maximum stress at the centre section due to bending is 4 tons per sq. in., the deflection at the centre is $\frac{1}{600}$ of the span. E = 12,000 tons per sq. in. (B.Sc. Lond. 1905.)

7. A 16 × 6 × 62 lb. R.S.J. carries a load of 12 tons at quarter span, the span being 24 ft. Find graphically the maximum deflection and compare that calculated for the same beam with the load at the centre. (I for this section = 725·7 in. units, E = 12,500 tons/in.^{2})

Ans. ·41 *in.* ·66 *in. at centre.*

Digitized by Google

CHAPTER IX.

1. A girder 100 ft. long is supported at each end and in the middle, and carries a uniform load of 2 tons per ft. run. Draw the B.M. and shear diagrams, and find the pressure on each support. (A.M.I.C.E. Feb. 1903.)

Ans. Max. B.M. 625 ft. tons; reaction 37·5 ; 125 ; 37·5 tons.

2. A continuous girder consists of four spans, the two outer spans are each 20 ft. long, and the two inner spans are each 40 ft. long ; the girder carries a uniformly distributed load of $1\frac{1}{2}$ tons per ft. run. Find (*a*) The reactions at each of the piers ; (*b*) The bending moment and shear at each of the piers ; (*c*) The position of the points of zero bending moment. Sketch complete bending moment and shear diagrams for the girder. (B.Sc. Lond. 1907.)

3. A balk of timber, 30 ft. long, rests on two end supports, and is supported also by a prop which acts at a point 12 ft. from the left-hand end. If the balk of timber carries (including its own weight) a load of 2 cwt. per ft. run, and if the tops of the three supports are level, determine the reactions at the three supports, and the bending moment at the point at which the prop is applied. Draw complete bending moment and shear diagram. (B Sc. Lond. 1907.)

4. A horizontal girder of uniform section 25 ft. long is firmly fixed at one end, and supported by a column at 18 ft. from the fixed end. The girder carries a uniform load of 2 tons per ft. run of its length, and, in addition, a concentrated load of 30 tons at 14 ft. from the fixed end. When unloaded, the girder just touches, but does not exert any pressure on the supporting column. Find the pressure on the column, and draw bending moment and shearing force diagrams for the girder. (B.Sc. Lond. 1907.)

5. A beam of 20 ft. span is built-in at one end A, and is freely supported at other end B. It carries a uniform load of $\frac{1}{2}$ ton per ft. run, and a central isolated load of 10 tons. Draw the bending moment diagram, first finding the bending at end A, and show where the maximum intermediate bending moment occurs. Draw also the shear diagram.

6. A continued girder of 2 spans, 20 ft. and 10 ft., has an overhang of 5 ft. from the smaller span. It carries a uniformly distributed load of $\frac{1}{2}$ ton per ft. run, and an isolated load of $1\frac{1}{2}$ tons at the free end (D). Find the support moments, and draw the shear and B.M. diagrams. Determine whether this arrangement is stronger than that in which the support C comes below the point D.

Ans. Max. B.M. 16·77 ft. tons; not so strong.

CHAPTER X.

1. A C. I. beam has the following section : top flange, $4 \times 1\frac{1}{2}$ ins. ; web, $12 \times 1\frac{3}{4}$ ins. ; bottom flange, 12×2 ins. The centroid of the section is 5·5 in. from the base of the bottom flange, and the moment

Digitized by Google

of inertia of the section about a line through its centroid, at right angles to the depth, is 1200 ins.^{4} Draw a curve showing the intensity of shear at all points of the section, and find the ratio of maximum to mean shear stress. What proportion of shearing force is carried by the web? (B.Sc. Lond. 1907.)

2. Find the greatest intensity of shear stress at a section of an I beam at which the total shear is 15 tons; the overall depth is 8 ins.; flanges, 6 ins. × ·61 in.; web, ·44 in. thick; I = 111·6 in.^{4}. (B.Sc. Lond. 1904.)

CHAPTER XI.

1. A pair of shear legs make an angle of 20° with each other, and their plane is at 60° to the horizontal; the backstay is at 30° to the plane of the legs. Find the forces in legs and stay for a load of 10 tons. *Ans.* 10 *tons stay;* 8·75 *tons each leg.*

2. A Bollman truss of 50 ft. span and 10 ft. depth carries a uniformly distributed load of 1 ton per foot run, and a single concentrated load of 10 tons at a point 20 ft. from the left-hand end of the truss. Determine the stresses in all the bars of the truss. (B.Sc. Lond. 1907.)

3. A Fink truss has a span of 30 ft., the depth is 4½ ft., and the four bays are equal. It is loaded with 2 tons per foot run over the whole span. Find the forces in the members, stating the assumptions that you make. (B.Sc. Lond. 1905.)

4. If an N girder, 120 ft. long and 12 ft. deep, with 10 bays, has to support a moving uniform load of 2 tons per foot run, find, approximately, the maximum stresses in the verticals due to this load. (A.M.I.C.E. Oct. 1906.)

CHAPTER XII.

1. A cast-iron column has its ends securely built-in. It is 12 ins. in external diameter, and 18 ft. long. What total load could you place on it if the factor of safety is 10, and the thickness of metal 1⅜ ins.? The constant for the Gordon formula is $\frac{1}{800}$. (B.Sc. Lond. 1904.) *Ans.* 163 *tons.*

2. A mild steel strut, rectangular in cross section, the breadth being four times its thickness, is 9 ft. long, and has pin ends. Determine the cross section for 24 tons, and a factor of safety of 5. Use Rankine's formula, and take f_c = 67,000 lb. per sq. in., and the constant $\frac{1}{3600}$. (B.Sc. Lond. 1903.)

3. Which would carry the heavier load for fixed ends: (*a*) a solid mild-steel column 9 ins. diam.; (*b*) a built-up mild-steel stanchion consisting of two 14 × 6 I beams, at 8½ ins. centres, with two 16 × ½ in. plates each side? Length in each case 14 ft.

Ans. The built-up one.

Digitized by Google

4. Discuss the formula of Gordon and Rankine in connection with the buckling of struts of moderate lengths, and state its limiting conditions. Four wrought-iron struts, rigidly held at the ends, all of section 1 in. × 1 in., and of lengths 15·0, 30·0, 60·0, and 90·0 ins. respectively, are found to buckle under loads of 15·9, 11·3, 7·7, and 4·35 tons. Test whether these satisfy the formula quoted, and, if so, find average values of the two empirical constants involved. (B.Sc. Lond. 1906.)

5. A stanchion for a workshop has to carry a small stanchion 10 ft. long from the roof which carries 5 tons, and also the girder for a 15-ton crane. If the centre line of the roof load and crane girder are 13 ins. apart, design a suitable section for the stanchion.

Ans. 2 10 *ins.* × 5 *ins.* × 30 ℔ *beams* 13 *ins. apart.*

CHAPTER XIII.

1. Find the permissible span for a steel wire suspended between supports, the dip of the wire being $\frac{1}{10}$ of the span, and the permissible stress in the wire being 7 tons per sq. in. You may assume that the wire will hang in a parabolic curve, although this is not absolutely true. *Ans.* 3400 *ft. nearly.*

2. Find the weight of a wire rope of 100 ft. span necessary to carry a man weighing 12 stone, taking dip as being 10 ft.

Ans. 9·25 *lbs.*

3. A foot bridge 10 ft. in width is carried over a river 100 ft. in width by two cables of uniform section, with a dip of 10 ft. at the centre. Find the greatest pull on the cables, their cross-sectional area, length, and weight for the following data: Maximum load on platform 120 lb. per sq. ft.; working stress in metal of cables 4 tons per sq. in.; weight of cable material 484 lb. per cub. ft. (A.M.I.C.E.)

Ans. Length, 102·6 *ft.; area*, 9·54 *sq. in.; weight*, 1·47 *tons; max. pull*, 38 *tons.*

4. A suspension bridge, span 200 ft., dip 15 ft., is strengthened by centrally hinged stiffening girders. Assuming the curve of the cable to remain parabolic, calculate the maximum, positive, and negative B.M.s in the stiffening girders when a live load of $1\frac{1}{2}$ tons per ft. run is carried. State also the position of the live loading when the maximum moments occur. (B.Sc. Lond. 1907.)

Ans. ± 937·5 *ft. tons; span half covered.*

5. A bridge has 8 three-pinned arches at 6 ft. 8 ins. apart, the span being 150 ft. The dead load is 200 lb. per sq. ft. and the live load equivalent to 400 lb. per sq. ft. What is the horizontal thrust when the span is half covered by the live load and if the plate-girder ribs are 4 ins. deep over angles; flange plates 18 in. × 1 in.; angles 4 ins. × 4 ins. × $\frac{1}{2}$ in.? Calculate approximately the maximum stress in the rib. *Ans.* 331 *tons; about* 9·4 *tons.*

Digitized by Google

CHAPTER XIV.

1. A retaining wall is trapezoidal in cross section, 18 ft. high, and 2 ft. thick at the top. Determine from the data given below the thickness of the wall at the base, if the back of the wall subjected to the earth pressure is vertical. (Weight of masonry per cubic foot, 144 lb.; weight of earth filling behind the wall per cubic foot, 120 lb.; angle of repose of the earth, 36 degrees.) The surface of the earth filling behind the wall is horizontal and level with the top of the wall. (B.Sc. Lond. 1907.)

2. Find, from first principles, the limiting height of a reservoir wall of triangular section, with a vertical water face, so that the maximum intensity of compressive stress on the base shall not exceed 8 tons per sq. ft. Specific gravity of masonry $2\frac{1}{4}$, weight of a cubic foot of water $\frac{1}{36}$ ton. State what assumptions you make regarding the distribution of stress on the base. (B.Sc. Lond. 1907.)

3. A retaining wall is 15 ft. high, and has a thickness of 6 ft. at the base and 3 ft. at the top. The angle of repose of the earth behind the wall is 45 degrees, and the face on which the earth pressure acts may be taken as vertical. The surface of the earth filling behind the wall is horizontal and level with the top of the wall. Determine the distribution of normal stress on the base of the wall, and write down the stresses per square foot at both edges of the base. (Weight of earth, 120 lb. per cub. ft.; weight of wall, 144 lb. per cub. ft.) (B.Sc. Lond. 1907.)

4. A wall is 2 ft. 6 ins. thick, and it imposes a load upon the concrete footing at the ground-level of 15 tons per lineal foot. If the width of the concrete is 3 ft. 6 ins., find what its depth should be, if the specific gravities of the earth and concrete are 1·75 and 2 respectively, and the tangent of the angle of friction of the earth ($\tan \phi$) = 0·7, the ratio of the lateral to the vertical stress at the foundation being $\frac{1 - \sin \phi}{1 + \sin \phi}$. (A.M.I.C.E. Oct. 1906.)

5. If the intensity of normal stress on the base of a triangular masonry dam, 100 ft. high, with vertical face subjected to water pressure for its full height, is assumed to be uniformly varying from zero at the inner toe to a maximum at the outer toe, and the width of the base is 70 ft., find the average shearing stress on a vertical plane 10 ft. from the outer toe. The specific gravity of the masonry is 2. (A.M.I.C.E. Oct. 1906.)

6. A circular concrete tower is built in a reservoir for drawing off the water, its external diameter is 20 ft. and the maximum difference in level of the water between the outside and the inside is 50 ft.; find what thickness the concrete wall must be made at the bottom if the maximum compressive stress in the concrete is to be 5 tons per sq. ft. Given that the ratio of the maximum intensity of compression to the maximum radial pressure equals twice the square of the outside radius divided by the difference of the squares of the outside and inside radii. (A.M.I.C.E. Feb. 1907.)

Digitized by Google

7. A retaining wall, vertical at the back, is 20 ft. high, 7 ft. wide at the base, tapering to 4 ft. at the top; if the sine of the angle of friction of the earth is 0·65, its weight per cub. ft. 110 lb., and that of the wall 150 lb. per cub. ft., would there be any tension at the base? What is the maximum intensity of compression there? (A.M.I.C.E. Feb. 1907.)

8. A wall of rectangular cross section stands upon a concrete footing extending 2 ft. beyond it on both sides, the pressure on the foundation being 2 tons per sq. ft. What should the thickness of the footing be to limit the intensity of vertical shearing stress in the footing to 40 lb. per sq. in.? (A.M.I.C.E. Feb. 1907.)

9. A circular masonry arch has a 40 ft. span and a 10 ft. rise, the thickness of the arch being 2 ft. 9 ins., and the filling 3 ft. deep from the crown. If the masonry weighs 112 lb. per cub. ft., the filling weighs 110 lb. per cub. ft., and the equivalent dead load is 80 lb. per sq. ft., investigate the stability of the arch.

CHAPTER XV.

1. Find what uniform load a concrete beam, reinforced with four $\frac{5}{8}$ in. square steel bars, will carry, if it is 12 ft. long between supports, 10 ins. broad, and 12 ins. deep, the centres of the rods being $1\frac{1}{2}$ ins. above the underside of the beam, and $2\frac{1}{2}$ ins. apart horizontally. The elastic limit of the steel is 18 tons per sq. in., the ultimate compressive strength of the concrete 1 ton per sq. in., and the factor of safety to be used, 4. Take the neutral axis at the centre of the beam, and assume that the steel takes all the tension. (A.M.I.C.E. Oct. 1906.)

2. Explain, with the help of sketches, the ordinary methods of constructing reinforced concrete beams. Obtain an expression for the modulus of resistance of such a reinforced beam, explaining carefully all the assumptions you make. (B.Sc. Lond. 1907.)

3. A reinforced concrete beam, 8 ins. × 11 ins. deep, has four $\frac{1}{2}$ in. bars, with centres at 1 in. from the bottom. Calculate for a span of 12 ft. the safe load (*a*) on the modified beam formulæ; (*b*) on the no-tension, straight-line formulæ. Take $f_s = 8500$, $f_c = 100$, $f_c' = 500$, $e = 15$. *Ans.* (*a*) 149 *lb.*; (*b*) 2154 *lb., in addition to its own weight.*

4. A T reinforced concrete beam has 4 ft. × $3\frac{1}{2}$ ins. flange, the width of web being 10 ins. If the centre of reinforcement is 15 ins. below the top, calculate its necessary area, using the above figures.
Ans. 794 *sq. ins.*

CHAPTER XVIII.

1. A box girder of 20 ft. span carries a distributed load of 65 tons. It is built of two 14 in. × 6 in. × 57 R.S.J. and steel flange plates. Allowing a stress of 7 tons per sq. in., and taking I_c of each joist

Digitized by Google

= 533 inch units, find suitable series of flange plates. Calculate exact weight per foot of the finished section, and express it as

$$= \frac{\text{Load carried in tons} \times \text{span in feet}}{\text{Constant.}}$$

Ans. Plates 15 *ins.* × $\frac{3}{4}$ *in.; constant* = 760.

2. Design a box girder of 35 ft. span to carry a uniformly distributed load of 75 tons. First calculate a suitable section, taking convenient values for the width of plates and effective depth of girder. Draw the proposed section, and show a plan of the flange of the girder, indicating how you would propose to arrange the flange plates. You may adopt $\frac{7}{8}$ in. rivets at 4 in. pitch.

Ans. $4\frac{1}{2}$ *in.* × $4\frac{1}{2}$ *in.* × $\frac{1}{2}$ *in. angles*, 3 *plates* 18 *ins.* × $\frac{3}{8}$ *in.*

3. A steel-plate web girder with parallel booms is required to carry a uniformly distributed load of 2 tons per foot run over a span of 100 ft. Design the centre section ; show how to design the longitudinal section of the boom ; and determine the pitch of the rivets uniting the booms to the web. Explain generally how you would design the web. (B.Sc. Lond. 1906.)

4. The cross girders of a railway bridge carrying the two lines of road have a span of 25 ft. Two locomotives may pass over the bridge at the same time ; the maximum weight on a pair of wheels is 18 tons, and the load per foot run due to the weight of the cross girder and flooring may be taken as $\frac{1}{2}$ ton. The distance apart of the inner rails is 6 ft., and the distance from centre to centre of the rails of each track is 5 ft. The depth of the girder is 2 ft. 3 ins., and the width of the flanges 1 ft. 1 in. Find suitable dimensions for the central section of one of the cross girders. (B.Sc. Lond. 1907.)

5. A plate girder of 60 ft. span has a depth of 6 ft., and carries a uniformly distributed load of $2\frac{1}{2}$ tons per foot run. The web is $\frac{1}{2}$ in. thick, and is connected to the flanges by angles, the pitch of the rivets through the web being 4 ins. Determine the diameter of the rivets, assuming a shearing stress of 4 tons per sq. in., and a bearing stress of 8 tons per sq. in. Find also the point in the girder at which it will be safe to make the rivets $\frac{3}{4}$ in. diameter. (B.Sc. Lond. 1907.)

6. A plate-web girder of 40 ft. span and 4 feet deep is required to carry a uniformly distributed load of 3 tons per foot of its length. Estimate the weight of the girder, and design a suitable central section. Show clearly how to determine the necessary pitch and diameter of the rivets uniting the web and angles at the ends, and how to find the necessary length of the flange plates. (B.Sc. Lond. 1907.)

7. A plate girder, 30 ft. long and 4 ft. deep, carries the equivalent of a uniformly distributed dead load of 6 tons per foot run ; find the necessary thickness of the flanges at the centre, the breadth being 16 ins. The flanges are connected to the web by angles $4\frac{1}{2}$ ins. × $4\frac{1}{2}$ ins. × $\frac{1}{2}$ in. Show how you allow for the material cut

Digitized by Google

away for the rivet holes, and how to determine the length of the individual plates in the flanges. Take the working intensity of stress for tension 9 tons per sq. in., and for compression 7 tons per sq. in., and the rivets as $\frac{7}{8}$ in. in diameter. (A.M.I.C.E. Oct. 1906.)

8. A wrought-iron girder is 20 ft. long and 2 ft. deep, with flanges 9 ins. broad and $\frac{3}{4}$ in. thick, the web being $\frac{3}{8}$ in. thick. What uniformly distributed load will the girder carry with a maximum intensity of stress of 5 tons per sq. in. in the flanges? What is the total horizontal shear between the web and flange from the centre to the end? (A.M.I.C.E. Feb. 1907.)

9. In designing a plate girder it is found that the shearing force acting on a particular section is 212 tons. If the mean depth of the girder at that point is 212 ft., find (*a*) the thickness of web; (*b*) the pitch of rivets uniting the web plate to the flanges. Assume a working shear stress of 9000 lb. per sq. in., and a diameter of $1\frac{1}{8}$ ins. for the rivets. (A.M.I.C.E.) *Ans.* (*a*) $\frac{3}{8}$ *in.*; (*b*) 5 *ins.*

Digitized by Google

Digitized by Google

APPENDIX.

The following Tables give the properties of the British Standard Sections which are usually listed by makers. See also the note on Material Sizes on p. 471.

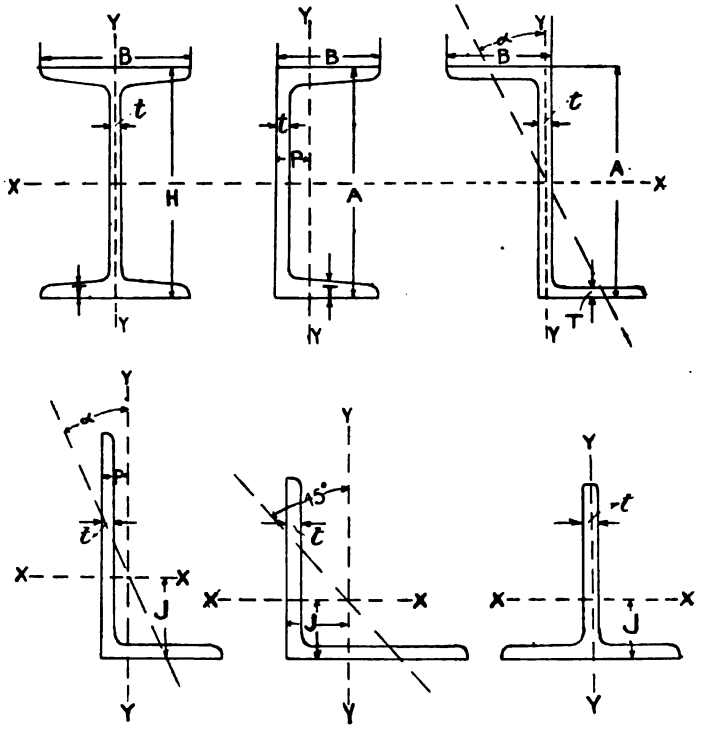

Fig. 1.—Properties of British Standard Sections.

Digitized by Google

BRITISH STANDARD SECTIONS.* (See Fig. A.)

PROPERTIES OF BRITISH STANDARD I BEAMS.

Size H. × B.	Wt. per foot	Thickness		Sectional Area	Moments of Inertia		Section Moduli		Radii of Gyration	
		t	T		XX	YY	XX	YY	XX	YY
inches.	lb.	ins.	ins.	sq. ins.	ins.	ins.	ins.	ins.	ins.	ins.
3 × 1½	4	·16	·248	1·18	1·66	·124	1·11	·165	1·19	·325
3 × 3	8½	·20	·332	2·50	3·79	1·26	2·53	·841	1·23	·710
4 × 1¾	5	·17	·240	1·47	3·67	·194	1·84	·222	1·58	·363
4 × 3	9½	·22	·336	2·80	7·53	1·28	3·76	·854	1·64	·677
4¾ × 1¾	6½	·18	·323	1·91	6·77	·263	2·85	·300	1·88	·371
5 × 3	11	·22	·376	3·24	13·6	1·46	5·45	·974	2·05	·672
5 × 4½	18	·29	·448	5·29	22·7	5·66	9·08	2·51	2·07	1·03
6 × 3	12	·26	·348	3·53	20·2	1·34	6·74	·892	2·40	·616
6 × 4½	20	·37	·431	5·88	34·7	5·41	11·6	2·40	2·43	·959
6 × 5	25	·41	·520	7·35	43·6	9·11	14·5	3·64	2·44	1·11
7 × 4	16	·25	·387	4·71	39·2	3·41	11·2	1·71	2·89	·851
8 × 4	18	·28	·402	5·30	55·7	3·57	13·9	1·79	3·24	·821
8 × 5	28	·35	·575	8·24	89·4	10·3	22·3	4·10	3·29	1·12
8 × 6	35	·44	·597	10·3	111	17·9	27·6	5·98	3·28	1·32
9 × 4	21	·30	·460	6·18	81·1	4·20	18·0	2·10	3·62	·824
9 × 7	58	·55	·924	17·1	230	46·3	51·1	13·2	3·67	1·65
10 × 5	30	·36	·552	8·82	146	9·78	29·1	3·91	4·06	1·05
10 × 6	42	·40	·736	12·4	212	22·9	42·3	7·64	4·14	1·36
10 × 8	70	·60	·970	20·6	345	71·6	69·0	17·9	4·09	1·87
12 × 5	32	·35	·550	9·41	220	9·74	36·7	3·90	4·84	1·02
12 × 6	44	·40	·717	12·9	315	22·3	52·6	7·42	4·94	1·31
12 × 6	54	·50	·883	15·9	376	28·3	62·6	9·43	4·86	1·33
14 × 6	46	·40	·698	13·5	441	21·6	62·9	7·20	5·71	1·26
14 × 6	57	·50	·873	16·8	553	27·9	76·2	9·31	5·64	1·29
15 × 5	42	·42	·647	12·4	428	11·9	57·1	4·78	5·89	·983
15 × 6	59	·50	·880	17·3	629	28·2	83·9	9·40	6·02	1·28
16 × 6	62	·55	·847	18·2	726	27·1	90·7	9·02	6·31	1·22
18 × 7	75	·55	·928	22·1	1150	46·6	128	13·3	7·22	1·45
20 × 7½	89	·60	1·01	26·2	1671	62·6	167	16·7	7·99	1·55
24 × 7½	100	·60	1·07	29·4	2655	66·9	221	17·8	9·50	1·51

* Published by permission of the Engineering Standards Committee. The Tables of British Standard I Beams, Channels, and Zed Bars are reprinted from Report No. 6 as issued by the Committee. Additional calculations have been inserted in the Tables of British Standard Unequal Angles, Equal Angles, and Tee Bars for thicknesses other than those calculated by the Committee, such calculations having been taken by permission from the *Pocket Companion* issued by Messrs. Dorman, Long & Co., Ltd.

Digitized by Google

Properties of British Standard Channels.

Size A × B	Standard Thicknesses		Weight per foot	Area	Dimension p	Moments of Inertia		Section Moduli		Radii of Gyration	
	t	T				About X X	About Y Y	About X X	About Y Y	About X X	About Y Y
ins.	ins.	ins.	lbs.	sq. ins.	ins.	ins.	ins.	ins.	ins.	ins.	ins.
15 × 4	·525	·630	41·94	12·334	·935	377·0	14·55	50·27	4·748	5·53	1·09
12 × 4	·525	·625	36·47	10·727	1·031	218·2	13·65	36·36	4·599	4·51	1·13
12 × 3½	·500	·600	32·88	9·671	·867	190·7	8·922	31·79	3·389	4·44	·960
12 × 3½	·375	·500	26·10	7·675	·860	158·6	7·572	26·44	2·868	4·55	·993
11 × 3½	·475	·575	29·82	8·771	·896	148·6	8·421	27·02	3·234	4·12	·980
10 × 4	·475	·575	30·16	8·871	1·102	130·7	12·02	26·14	4·147	3·84	1·16
10 × 3½	·475	·575	28·21	8·296	·933	117·9	8·194	23·59	3·192	3·77	·994
10 × 3½	·375	·500	23·55	6·925	·933	102·6	7·187	20·52	2·800	3·85	1·02
9 × 3½	·450	·550	25·39	7·469	·971	88·07	7·660	19·57	3·029	3·43	1·01
9 × 3½	·375	·500	22·27	6·550	·976	79·90	6·963	17·76	2·759	3·49	1·03
9 × 3	·375	·437	19·37	5·696	·754	65·18	4·021	14·48	1·790	3·38	·840
8 × 3½	·425	·525	22·72	6·682	1·011	63·76	7·067	15·94	2·839	3·09	1·03
8 × 3	·375	·500	19·3c	5·675	·844	53·43	4·329	13·36	2·008	3·07	·873
7 × 3½	·400	·500	20·23	5·950	1·061	44·55	6·498	12·73	2·664	2·74	1·04
7 × 3	·375	·475	17·56	5·166	·874	37·63	4·017	10·75	1·889	2·70	·882
6 × 3½	·375	·475	17·9	5·266	1·119	29·66	5·907	9·885	2·481	2·36	1·06
6 × 3	·312	·437	14·49	4·261	·938	24·01	3·503	8·003	1·699	2·37	·907

Properties of British Standard Zed Bars.

Size A × B	Standard Thicknesses		Area	Weight per foot	Moments of Inertia		Section Moduli		Angle α in degrees	Least Radius of Gyration
	t	T			About X X	About Y Y	About X X	About Y Y		
ins.	ins.	ins	sq. ins.	lbs.	ins	ins.	ins.	ins.		ins.
10 × 3½	·475	·575	8·283	28·16	117·865	12·876	23·573	3·947	14	·839
9 × 3½	·450	·550	7·449	25·33	87·889	12·418	19·531	3·792	16½	·843
8 × 3½	·425	·525	6·670	22·68	63·729	12·024	15·932	3·657	19½	·845
7 × 3½	·400	·500	5·948	20·22	44·609	11·618	12·745	3·521	23	·840
6 × 3½	·375	·475	5·258	17·88	29·660	11·134	9·887	3·361	28½	·821
5 × 3	·350	·450	4·169	14·17	16·145	6·578	6·458	2·328	29½	·698

Digitized by Google

Properties of British Standard Unequal Angles.

Size and Thickness	Area	Weight per foot	Dimensions		Moments of Inertia		Section Moduli		Angle α in degrees	Least Radius of Gyration
			J	P	About X X	About Y Y	About X X	About Y Y		
ins.	sq. ins.	lb.	ins.	ins.	ins.	ins.	ins.	ins.		ins.
7 × 3½ × ½	5·0	17·00	2·50	·764	25·1	4·28	5·58	1·56	14½	·74
„ „ ⅝	6·172	20·98	2·55	·814	30·55	5·15	6·86	1·92	14½	·74
„ „ ¾	7·313	24·86	2·60	·862	35·68	5·95	8·11	2·26	14	·73
6½ × 4½ × ½	5·248	17·84	2·08	1·09	22·2	8·75	5·02	2·57	25	·97
„ „ ⅝	6·482	22·04	2·13	1·14	27·09	10·60	6·20	3·15	25	·96
„ „ ¾	7·686	26·13	2·18	1·19	31·66	12·32	7·33	3·72	25	·96
6½ × 3½ × ⅜	3·610	12·27	2·22	·741	15·7	3·27	3·67	1·18	16½	·75
„ „ ½	4·750	16·15	2·28	·792	20·4	4·20	4·83	1·55	16½	·75
„ „ ⅝	5·860	19·92	2·33	·841	24·83	5·06	5·95	1·90	16	·74
6 × 4 × ⅜	3·610	12·27	1·91	·923	13·2	4·73	3·23	1·54	23½	·87
„ „ ½	4·750	16·15	1·96	·974	17·1	6·10	4·23	2·02	23½	·86
„ „ ⅝	5·860	19·92	2·02	1·02	20·8	7·36	5·23	2·47	23½	·86
6 × 3½ × ⅜	3·424	11·64	2·01	·773	12·6	3·22	3·16	1·18	19	·76
„ „ ½	4·502	15·31	2·06	·823	16·4	4·14	4·16	1·55	19	·75
„ „ ⅝	5·549	18·87	2·11	·872	19·88	4·97	5·11	1·89	18½	·75
5½ × 3½ × ⅜	3·236	11·00	1·80	·807	9·93	3·15	2·68	1·17	22	·76
„ „ ½	4·252	14·46	1·85	·857	12·80	4·05	3·51	1·53	22	·75
„ „ ⅝	5·236	17·80	1·90	·905	15·6	4·86	4·33	1·87	21½	·75
5½ × 3 × ⅜	3·050	10·37	1·90	·662	9·45	2·02	2·62	·86	17	·64
„ „ ½	4·003	13·61	1·95	·711	12·2	2·58	3·44	1·13	16½	·64
„ „ ⅝	4·925	16·74	2·00	·759	14·7	3·08	4·20	1·37	16½	·63
5 × 4 × ⅜	3·236	11·00	1·51	1·01	7·96	4·53	2·28	1·52	32	·85
„ „ ½	4·252	14·46	1·56	1·06	10·3	5·82	2·99	1·98	32	·84
„ „ ⅝	5·236	17·80	1·60	1·11	12·4	7·01	3·66	2·43	32	·83
5 × 3½ × ⅜	3·050	10·37	1·59	·848	7·64	3·09	2·24	1·17	25½	·75
„ „ ½	4·003	13·61	1·64	·897	9·86	3 96	2·93	1·52	25½	·75
„ „ ⅝	4·925	16·74	1·69	·944	11·9	4·75	3·60	1·86	25	·74
5 × 3 × 7/16	2·402	8·17	1·66	·667	6·14	1·68	1·84	·72	20	·65
„ „ ⅜	2·859	9·72	1·68	·693	7·24	1·97	2·18	·85	19½	·65
„ „ ½	3·749	12·75	1·73	·742	9·33	2·51	2·85	1·11	19½	·64
„ „ ⅝	4·609	15·67	1·78	·789	11·25	3·00	3·49	1·36	19	·64

Digitized by Google

Unequal Angles (*continued*).

Size and Thickness	Area	Weight per foot	Dimensions		Moments of Inertia		Section Moduli		Angle α in degrees	Least Radius of Gyration
			J	P	About X X	About Y Y	About X X	About Y Y		
ins.	sq. in.	lb.	ins.	ins.	ins.	ins.	ins.	ins.		ins.
4½ × 3½ × 5/16	2·402	8·17	1·36	·866	4·22	2·55	1·54	·97	30½	·74
„ „ ⅜	2·859	9·72	1·39	·891	5·69	3·00	1·83	1·15	30½	·74
„ „ ½	3·749	12·75	1·44	·940	7·31	3·84	2·39	1·5	30	·74
„ „ ⅝	4·609	15·67	1·48	·987	8·81	4·61	2·92	1·83	30	·74
4 × 3½ × 5/16	2·246	7·64	1·16	·915	3·46	2·47	1·22	·96	37	·72
„ „ ⅜	2·671	9·08	1·19	·941	4·08	2·90	1·45	1·13	37	·72
„ „ ½	3·499	11·90	1·24	·990	5·23	3·71	1·89	1·48	37	·71
„ „ ⅝	4·295	14·61	1·28	1·04	6·28	4·44	2·31	1·80	36½	·71
4 × 3 × 5/16	2·091	7·11	1·24	·746	3·31	1·59	1·20	·71	28½	·64
„ „ ⅜	2·485	8·45	1·27	·771	3·89	1·87	1·42	·84	28½	·64
„ „ ½	3·251	11·05	1·31	·819	4·98	2·37	1·85	1·09	28½	·63
„ „ ⅝	3·985	13·55	1·36	·865	5·96	2·83	2·26	1·33	28	·63
3½ × 3 × 5/16	1·934	6·58	1·04	·792	2·27	1·53	·92	·69	35½	·62
„ „ ⅜	2·298	7·81	1·07	·819	2·67	1·80	1·10	·83	35½	·62
„ „ ½	3·001	10·20	1·11	·867	3·40	2·28	1·42	1·07	35½	·61
„ „ ⅝	3·673	12·49	1·16	·912	4·05	2·71	1·73	1·30	35	·61
3½ × 2½ × 5/16	1·799	6·05	1·12	·627	2·15	·910	·90	·49	26½	·54
„ „ ⅜	2·111	7·18	1·15	·652	2·52	1·06	1·07	·57	26	·53
„ „ ½	2·752	9·36	1·20	·699	3·20	1·34	1·39	·74	26	·53
3 × 2½ × ¼	1·312	4·46	·895	·648	1·14	·716	·54	·39	34	·52
„ „ ⅜	1·921	6·53	·945	·697	1·62	1·02	·79	·57	34	·52
„ „ ½	2·499	8·50	·992	·744	2·05	1·28	1·02	·73	33½	·52
3 × 2 × ¼	1·187	4·04	·976	·482	1·06	·373	·52	·25	23½	·43
„ „ ⅜	1·733	5·89	1·03	·532	1·50	·525	·76	·36	23	·42
„ „ ½	2·249	7·65	1·07	·578	1·89	·656	·98	·46	22½	·42
2½ × 2 × ¼	1·063	3·61	·774	·527	·636	·359	·37	·24	32	·42
„ „ 5/16	1·309	4·45	·799	·552	·770	·433	·45	·30	31½	·42
„ „ ⅜	1·547	5·26	·823	·575	·895	·502	·53	·35	31½	·42
2 × 1½ × 3/16	·622	2·11	·627	·381	·240	·115	·17	·10	28½	·32
„ „ ¼	·814	2·77	·653	·407	·308	·146	·23	·13	28	·31
„ „ 5/16	·997	3·39	·678	·431	·369	·174	·28	·16	28	·31

Digitized by Google

British Standard Equal Angles.

Sizes	Area	Weight per foot	J	I_{xx}	Section Modulus about X X	Least Radius of Gyration
ins.	sq. ins.	lb.	ins.	ins.	ins.	ins.
8 × 8 × ½	7·75	26·35	2·15	47·4	8·10	1·58
8 × 8 × ⅝	9·61	32·67	2·20	58·2	10·03	1·57
8 × 8 × ¾	11·44	38·89	2·25	68·5	11·91	1·56
6 × 6 × 7/16	5·06	17·21	1·64	17·3	3·97	1·18
6 × 6 × ⅝	7·11	24·18	1·71	23·8	5·55	1·18
6 × 6 × ¾	8·44	28·70	1·76	27·8	6·56	1·17
5 × 5 × ⅜	3·61	12·27	1·37	8·51	2·24	·98
5 × 5 × ½	4·75	16·15	1·42	11·0	3·07	·98
5 × 5 × ⅝	5·86	19·92	1·47	13·4	3·80	·98
4½ × 4½ × ⅜	3·24	11·00	1·22	6·14	1·87	·88
4½ × 4½ × ½	4·25	14·46	1·29	7·92	2·47	·87
4½ × 4½ × ⅝	5·24	17·80	1·34	9·56	3·03	·87
4 × 4 × ⅜	2·86	9·72	1·12	4·26	1·48	·78
4 × 4 × ½	3·75	12·75	1·17	5·46	1·93	·77
4 × 4 × ⅝	4·61	15·67	1·22	6·56	2·36	·77
3½ × 3½ × 5/16	2·09	7·11	·97	2·39	·95	·68
3½ × 3½ × ⅜	2·48	8·45	1·00	2·80	1·12	·68
3½ × 3½ × ½	3·25	11·05	1·05	3·57	1·46	·68
3½ × 3½ × ⅝	3·98	13·55	1·09	4·27	1·77	·68
3 × 3 × ¼	1·44	4·90	·827	1·21	·56	·59
3 × 3 × ⅜	2·11	7·18	·877	1·72	·81	·58
3 × 3 × ½	2·75	9·36	·924	2·19	1·05	·58
3 × 3 × ⅝	3·36	11·43	·970	2·59	1·28	·58
2½ × 2½ × ¼	1·19	4·04	·703	·677	·38	·48
2½ × 2½ × 5/16	1·46	4·98	·728	·822	·46	·48
2½ × 2½ × ⅜	1·73	5·89	·752	·962	·55	·48
2½ × 2½ × ½	2·25	7·65	·799	1·21	·71	·48
2¼ × 2¼ × 3/16	·809	2·75	·616	·378	·23	·44
2¼ × 2¼ × ¼	1·06	3·61	·643	·489	·30	·44
2¼ × 2¼ × 5/16	1·31	4·45	·668	·592	·37	·43
2¼ × 2¼ × ⅜	1·55	5·26	·692	·686	·44	·43

Digitized by Google

British Standard Equal Angles *(continued).*

Sizes	Area	Weight per foot	J	I_{xx}	Section Modulus about X X	Least Radius of Gyration
ins.	sq. ins.	lb.	in.	in.	in.	in.
2 × 2 × 3/16	·715	2·43	·554	·260	·18	·39
2 × 2 × 1/4	·938	3·19	·581	·336	·24	·39
2 × 2 × 5/16	1·15	3·92	·605	·401	·29	·38
2 × 2 × 3/8	1·36	4·62	·629	·467	·34	·38
1 3/4 × 1 3/4 × 3/16	·622	2·11	·495	·172	·14	·34
1 3/4 × 1 3/4 × 1/4	·814	2·77	·520	·220	·18	·34
1 3/4 × 1 3/4 × 5/16	·997	3·39	·544	·264	·22	·34
1 1/2 × 1 1/2 × 3/16	·526	1·79	·434	·105	·10	·29
1 1/2 × 1 1/2 × 1/4	·686	2·33	·458	·134	·13	·29
1 1/2 × 1 1/2 × 5/16	·839	2·85	·482	·159	·16	·29
1 1/4 × 1 1/4 × 3/16	·433	1·47	·371	·058	·07	·24
1 1/4 × 1 1/4 × 1/4	·561	1·91	·396	·073	·09	·23

British Standard Tees.

Sizes	Area	Weight per foot	J	Moments of Inertia		Section Moduli		Radii of Gyration	
				X X	Y Y	X X	Y Y	X X	Y Y
ins.	sq ins.	lb.	ins.	ins.	ins.	ins.	ins.	ins.	ins.
6 × 4 × 3/8	3·634	12·36	·915	4·70	6·34	1·52	2·11	1·14	1·32
6 × 4 × 1/2	4·771	16·22	·968	6·07	8·62	2·00	2·87	1·13	1·34
6 × 4 × 5/8	5·878	19·99	1·02	7·35	10·91	2·47	3·64	1·12	1·36
6 × 3 × 3/8	3·260	11·08	·633	2·06	6·39	·87	2·13	·795	1·40
6 × 3 × 1/2	4·272	14·53	·684	2·63	8·65	1·14	2·88	·785	1·42
6 × 3 × 5/8	5·256	17·87	·732	3·14	10·94	1·39	3·65	·773	1·44
5 × 4 × 3/8	3·257	11·07	·998	4·47	3·69	1·49	1·48	1·17	1·06
5 × 4 × 1/2	4·268	14·51	1·05	5·77	5·02	1·96	2·01	1·16	1·08
5 × 3 × 3/8	2·875	9·78	·691	1·97	3·71	·85	1·49	·828	1·14
5 × 3 × 1/2	3·762	12·79	·741	2·52	5·03	1·11	2·01	·818	1·16
4 × 4 × 3/8	2·872	9·77	1·11	4·19	1·90	1·45	·95	1·21	·814
4 × 4 × 1/2	3·758	12·78	1·16	5·40	2·59	1·90	1·29	1·20	·830
4 × 3 × 3/8	2·498	8·49	·767	1·86	1·91	·83	·96	·863	·875
4 × 3 × 1/2	3·262	11·08	·816	2·36	2·60	1·08	1·30	·851	·893

Digitized by Google

BRITISH STANDARD TEES *(continued).*

Sizes	Area	Weight per foot	J	Moments of Inertia		Section Moduli		Radii of Gyration	
				XX	YY	XX	YY	XX	YY
ins.	sq. ins.	lbs.	ins.	ins.	ins.	ins.	ins.	ins	ins.
3½ × 3½ × ⅜	2·496	8·49	·98	2·79	1·28	1·10	·73	1·05	·717
3½ × 3½ × ½	3·259	11·08	1·04	3·54	1·75	1·44	1·00	1·04	·733
3 × 3 × ⅜	2·121	7·21	·868	1·70	·816	·80	·54	·897	·620
3 × 3 × ½	2·760	9·38	·918	2·16	1·11	1·04	·74	·886	·636
3 × 2½ × ⅜	1·929	6·56	·695	1·01	·814	·56	·54	·725	·650
3 × 2½ × ½	2·506	8·52	·742	1·28	1·12	·73	·74	·713	·665
2½ × 2½ × ¼	1·197	4·07	·697	·677	·302	·38	·24	·752	·502
2½ × 2½ × 5/16	1·474	5·01	·724	·832	·387	·46	·31	·747	·512
2½ × 2½ × ⅜	1·742	5·92	·750	·959	·473	·55	·38	·742	·521
2¼ × 2¼ × ¼	1·071	3·64	·638	·488	·224	·30	·20	·675	·457
2¼ × 2¼ × ⅜	1·554	5·28	·689	·685	·349	·44	·31	·664	·474
2 × 2 × ¼	·947	3·22	·579	·337	·157	·24	·16	·597	·407
2 × 2 × ⅜	1·367	4·64	·628	·469	·246	·34	·25	·586	·424
1½ × 2 × ¼	·820	2·79	·648	·307	·068	·23	·09	·612	·288
1½ × 2 × 5/16	1·003	3·41	·674	·369	·088	·28	·12	·607	·296
1¾ × 1¾ × ¼	·820	2·79	·519	·221	·107	·18	·12	·520	·361
1¾ × 1¾ × 5/16	·999	3·40	·544	·265	·137	·22	·16	·515	·370
1½ × 1½ × 5/16	·531	1·81	·435	·106	·048	·10	·06	·447	·301
1½ × 1½ × ¼	·692	2·35	·460	·135	·067	·13	·09	·442	·312

Digitized by Google

INDEX.

A.

PAGE

Anderson formula for bridges . 516
Andrews-Pearson formula for crane hooks, &c. . . . 164
Arches
at Exeter 551
doubly built-in 384
Eddy's Theorem . . . 372
linear arch 371
masonry 429–434
parabolic 373
rigid 377–388
rolling loads on . . 377, 386
three-pinned 375, 551
thrust due to temperature . 383, 387
two-pinned 381
Areas
mathematical determination . 56
Parmontier's rule . . . 59
Simpson's rule 58
sum curves 57
table of various sections . . 81
Atcherley, L. W. . . . 402

B.

Bairstow 31
Baker, Sir B.
practical rules for earth pressure 419
repetition of stresses . . . 29
weights of railway bridges . . 515
Barr's method for framed structures 298
Bauschinger . . . 29, 31
Beams, stresses in
assumptions 144
combined bending and direct stress 168
curved 157–165
discrepancy between theory and practice 175
general case 155
inclined loading . . . 165
modulus of beam . . . 147
moment of resistance . 144, 155

Beams, stresses in PAGE
neutral axis 144
shearing stress in, *see* Shear.
Bending moments
beams fixed at one end and supported at other . . . 264
cantilevers . . . 106–111
continuous beams, *see* Continuous beams.
fixed beams, *see* Fixed beams.
for ships 126
graphical determination . 108, 117
inclined loads and sloping beams 133–142
numerical examples . . 129–133
relation between load, shear, and B.M. 124
rolling loads, *see* Rolling loads.
simply-supported beams . 111–123
summary of 288
Bernoulli's assumption . . . 145
Bearings for bridges . . 555–560
Bollman Truss 330
Box girders, *see* Plate, &c., girders.
Bracing
for bridges 554
knee 314, 485
sway 485
Breaking stresses, *see* Stress, breaking.
Brick pier foundations . . . 480
Brickwork, *see* Masonry.
Bridges
bearings 555–560
camber 528
deck and through . . . 520
economical span . . . 520
effective span 520
Exeter, arch at 551
floorings, arrangement of . 521–528
framed girders . . . 544–551
impact allowance . . . 517
lateral and transverse bracing . 554
loads, dead and live . . 515–519

Digitized by Google

PAGE

Bridges
plate girders, *see* Plate, &c., girders.
River Barrow, over . . . 544
River Clyde, over . . . 548
on L.B. & S.C.R. . . . 546
trusses, stresses in, *see* Framed structures.
weight of 516
British Reinforced Concrete Company system 467
British standard sections, properties of . . . . . *Appendix*
Broad-flange beams . . . 477
Buckling of columns, *see* Columns, &c.
Buckling of webs, *see* Plate, &c., girders.
Buildings, steelwork, &c., for
broad-flange beams . . . 477
columns, stanchions and struts, *see* Columns, &c.
deflections 488
fireproof construction, *see* Fireproof construction.
foundations for, *see* Foundations.
girders 487–493
loads, dead and live . . . 472
Ritz Hotel 478
roofs, *see* Roofs.
transverse bracing . . . 485
Westminster Trust building . 478
workshops 478
Built-in beams, *see* Fixed beams.

C.

Cable, stresses in 357
Caisson foundations 484
Camber 528
Cantilevers, *see* Bending moments; Shear.
Cantilever foundations . . . 485
Cantilever-girder principle . 241, 264
Cast-iron, stress-strain diagrams for 5, 7
Cement, *see* Concrete, &c.
Centroid
definition 62
graphical determination of 72, 78
heterogeneous sections . . 79
mathematical determination of . 70
of British standard sections, *see* Appendix.
table of various sections . . 81
trapezium and quadrilateral . 87
Chimneys, *see* Masonry structures.

PAGE

Cleat connections . . 101, 243
Clerk Maxwell's stress diagrams 293–316
Coignet reinforced concrete . . 463
Columbian fireproofing system . 496
Columns, stanchions, and struts
braced 347
buckling factor 336
caps and bases 474
curves for 346
eccentric loading . . 352–356
fixing of ends 339
for buildings, &c. . . 473–478
formulæ
Euler 337
Fidler 345
Gordon 344
Johnson 343
Rankine 341
straight-line 343
foundations for, *see* Foundations.
Combined bending and direct stresses 168–173
Cooper, Theo.
formula for plate-girder webs . 541
loads on road bridges . . 519
Concrete and cement
properties of concrete . 436–440
reinforced
adhesion between concrete and steel 433
beams 443–456
columns . . . 459–462
shear in beams . . . 457
standard notation . . . 443
systems of . . . 463–469
T beams 453
under simple compression . 441
stress-strain diagram for . . 8
Considère on reinforced concrete . 438
Continuous beams
advantages and disadvantages . 263
diagram for number of equal spans 256
fixed ends 255
graphical treatment . . 255–263
supports not on same level . 247
theorem of three moments . 251
two equal spans with uniform load 245
Cores of sections 393
Crane, curved, B.M., &c., on . 141
Crane hooks, &c., stresses in 156–165

Digitized by Google

PAGE

D.

Dams, masonry . . . 395–404
Deflections of beams
deviation of cross section . . 211
due to shear 283
fixed beams . . . 229, 237
general formula . . . 200
graphical construction . . 209
mathematical treatment . 212–220
Mohr's theorem . . . 201
resilience in bending . . . 221
standard cases . . . 203–219
summary of 288
Duchemin's formula for wind . 49
Dynamic loading, *see* Stress, dynamic.

E.

Earth pressure . . . 405–424
Eddy's theorem for arches . . 372
Elastic
constants or moduli, *see* Modulus, elastic.
body, definition of . . . 1
limit
confusion with yield-point . 7
definition 4
working stresses, based on 43, 342
properties of materials, table of . 40
Ellipse of inertia, *see* Moments of inertia.
Ellipse of stress, *see* Stress.
Encastré beams, *see* Fixed beams.
Euler's formula for columns, &c. . 337
Expanded metal fireproofing system 494
Eye bars 102, 508

F.

Factories, steelwork for, *see* Buildings, &c.
Factor of safety 43
Fairbairn on repetition of stresses . 28
Fatigue of metals, *see* Stress, repetitions of.
Fidler, Prof. Claxton
continuous beams . . . 263
formula for struts . . . 345
Fink truss 330
Fireproof construction . . 493–498
Fixed Beams
advantages and disadvantages . 240
asymmetrical loading . . 231

PAGE

Fixed beams
beams fixed at one end and supported at other . . 264
graphical treatment . . 227–235
mathematical treatment . 236–240
symmetrical loading . . . 227
with ends not on same level . 241
Flitched beams 152
Forth Bridge, wind experiments . 47
Foundations
brick piers 480
caisson 484
cantilever 485
grillage 481
pile 483
Rankine's formula for . . 414
safe pressures on . . . 479
Framed structures
bridges, *see* Bridges.
counterbraced or semi-member frames 291
kinds of, deficient, perfect, and redundant 289
local bending in . . 311–314
relation between bars and nodes . 291
rolling loads on . . . 325
roofs, *see* Roofs.
stresses in
by resolution . . . 323
from line of pressure . . 323
method of moments or sections 316–322
reciprocal figures . 293–316
ties and struts . . 292–295
trigonometrical method . . 321
superposed frames . . . 327
French truss . . . 297, 333
Funicular polygon, *see* Link polygon.

G.

Gantry girders 491
Girders
bending moments, *see* Bending moments.
deflections, *see* Deflections, &c.
for buildings, *see* Buildings, &c.
framed, *see* Framed structures; Bridges.
plate and box, *see* Plate-girders.
shear, *see* Shear.
stresses, &c., *see* Beams, stresses in.
Goodman, Prof., on crane hooks . 164
Grillage foundations . . . 481

Digitized by Google

PAGE

H.

Hancock, Prof. E. L. . . . 27
Hennebique reinforced concrete . 463
Hogback girder . . . 301, 533
Hooke's Law 1
Hunter, Mr. Adam, on wind pressure 47
Hutton's formula for wind . . 49

I.

Impact on bridges, *see* Bridges.
Impact stresses, *see* Stress, impact.
Indented bar, reinforced concrete system 468
Inertia, moment of, *see* Moment.
Intensity of stress, *see* Stress.

J.

Johnson, Prof.
formula for struts . . . 343
strength of brickwork, &c. . 9

K.

Kahn reinforced concrete system . 467
Kleine fireproofing system . . 498
Knee bracing . . . 314, 485

L.

Lattice girder 327
Launhardt-Weyrauch formula . 45
Lilly, Prof.
bridges, weights on . . . 517
stiffeners for plate girders . . 541
Limit of elasticity, *see* Elastic limit.
Lineham, W. J. 7
Line of pressure, *see* Pressure, line of.
Link and vector polygon construction 53
framed structures for, *see* Reciprocal figures.
general 53
through any three points . . 375
Linville truss 299
Live Loads
B.M. and shear for, *see* Rolling loads.
on bridges 516
on buildings 472
on rigid arches 388
working stresses for, *see* Stress, working.

PAGE

M.

Masonry
brickwork, strength of . . 8
concrete, *see* Concrete.
elastic properties of . . . 8
Masonry structures
arches 429–434
buttresses 426–429
chimneys 50, 424
cores 393
dams 395–404
earth pressure . . . 405–423
general conditions of stability . 389
middle-third law . . . 390
retaining walls . . . 405–424
Wray's rule for uncemented blocks 395
Middle-third law 390
Modulus
beams 145, 174
elastic
bulk 9
relation between . . . 10
rigidity, *see* shear *below*.
shear 9
table of 40
volume, *see* bulk *above*.
Young's 9
Mohr
graphical construction for moment of inertia. . . 77
theorem of deflection. . . 201
Momental ellipse 66
Moments
bending, *see* Bending moments.
first 59
method of . . . 316–322
of inertia,
definition 64
ellipse of 66
graphical determination 73, 78
heterogeneous sections . . 79
mathematical determination . 70
of British standard sections, *see* Appendix.
of rail section . . . 76
polar 69
radius of gyration . . . 65
rectangle 77
secondroid 65
table of various sections . 81
product 66
second, *see* of inertia *above*.

Digitized by Google

N.

PAGE

N girder 299

P.

Parabola, 1st and 2nd moments . 70
Parmontier's rule 59
Pearson, Prof. Karl
dams 402
crane hooks, &c. . . . 164
history of elasticity . . . 27
wind-pressure formula . . 49
Permanent set 1
Perry, Prof., model for beam stresses 143
Piers and templates . . . 479
Pile foundations 483
Pin joints, *see* Eye bars.
Plastic bodies 1
Plate and box girders
approximate modulus . . 174
curtailment of flange plates . 533
depth of 528
flange splices 535
rivets, pitch of 536
sizes of plates for . . . 471
stiffeners 539
web, design of 539
Poisson's ratio 3
Popplewell, W. C. . . . 7, 9
Pratt truss 299
Pressure, line of
for arches. 371
for framed structures. . . 323
for masonry structures . 389–432
general case 139
through three given points . 375
Pressures on foundations, &c., *see* Foundations.
Principal stresses, *see* Stresses.
Principles of design . . . 41

Q.

Quadrilateral, centroid of . . 88

R.

Radius of gyration, *see* Moments of inertia.
Rail section, moment of inertia of. 76
Rankine, Prof.
formula for columns, &c. . . 341
theory of combined stresses . 27
theory of earth pressure . 406–415
Reinforced concrete, *see* Concrete, reinforced.

PAGE

Repetitions of stress, *see* Stress.
Repose, angle of 405
Resilience 27, 221
Resolution of forces . . . 54
Retaining walls . . . 405–423
Ritz Hotel 478
Rivets and riveted joints
bearing strength . . 94, 104
butt joints 90
chain and zigzag riveting . . 90
diameter of rivets . . . 90
efficiency 94
forms of heads 89
forms of joints 90
lap joints 90
methods of failure . . . 92
plate, &c., girders, for . . 536
punching and drilling . . 100
shear strength . . . 94, 104
strain in 2
tables
cleat connections . . . 103
spacing for rolled sections . 104
strengths of rivets . . 104
Ritter's method of sections . 316–322
Rolling loads
circumscribing parabola . . 191
combined rolling and dead load 196
general case, graphical treatment 192
isolated load 178
on arches and suspension bridges, *see* Arches: Suspension bridges.
on framed structures . . . 325
two isolated loads . . . 185
uniform load longer than span . 180
shorter than span . . . 183
Roofs
eye bars for 508
reciprocal diagrams for . 293–316
trusses
collar beam . . . 332, 512
hammer beam . . . 514
knee bracing . . . 314
timber, scantlings for . . 511
types of 500
working drawings of . 502–507
weights of coverings, &c. . . 499

S.

St. Venant
combined strains . . . 27
shear stresses in beams . . 275

Digitized by Google

PAGE

Schleffler theory of earth pressure . 419
Secondroid, *see* Moments of inertia.
Sections
method of . . . 316–322
sizes and shapes of . . . 470
Shear
diagrams
cantilevers . . . 106–111
continuous beams, *see* Continuous beams.
fixed beams, *see* Fixed beams.
for ships 126
for inclined loads and sloping beams . . . 133–142
graphical determination 108, 117
relation between load, shear, and B.M. 124
simply supported beams 111–123
summary of 288
deflection, due to . . . 283
distortion of beams, due to . 285
in beams
distribution of stress . 272–283
effect of 153
legs 335
Ships, shear and B.M. for . . 126
Simpson's rule 59
Slocum, R. H. - 8
Soils, safe pressures on. . . 479
Stanchions, *see* Columns, &c.
Stanton, Dr., on repeated loads . 31
Steel, mild
stress-strain diagrams for . . 5
tensile strength for structural work 6
Steelwork for buildings, *see* Buildings, &c.
Stone, *see* Masonry.
Stone, Mr., on impact on bridges . 518
Strain
combined normal and shear strains 22
definition 1
kinds of 2
transverse 3
unital 3
Stress
breaking, table of . . . 40
combined normal and shear stresses 19
definition 1
due to sudden loading, *see* dynamic below.

PAGE

Stress
dynamic 32
ellipse of 17
impact 35
in beams 143 177
in heterogeneous bars . . 37
intensity of 2
principal 14
repetitions of 28
shear 2, 12
in beams, *see* Shear.
static 28
strain diagrams. 4
temperature 37
working . . 43–46, 342
Struts, *see* Columns, &c.
Sudden loading of structures, *see* Stresses, dynamic.
Sum curves, *see* Areas.
Suspension bridges . . 358–370

T.

Temperature stresses, *see* Stress, temperature; Arches.
Theorem of three moments . . 251
Timber
elastic properties . . . 7
working stresses for, *see* Stresses, working.
roofs, *see* Roofs.
Thrust, curves of 139
Transverse strain, *see* Strain.
Trapezium, centroid of . . 87
Tripods 335
Trusses, *see* Bridges; Framed structures; Roofs.

U.

U.K. fireproof floor . . . 496
Unital strain, *see* Strain.
Unwin, Prof.
extension of tension specimens . 7
formula for repeated loads. . 32
rivet diameter . . . 90
weight of bridges . . . 516

V.

Vector polygon construction . . 52

W.

Walls, *see* Masonry structures.
Warren girders 296

Digitized by Google

PAGE
Wedge theory of earth pressure 415–424
Westminster Trust building . . 478
Whipple-Murphy truss . . . 327
Wind
Board of Trade recommendations 50
on chimneys, &c. 50
pressure due to 46
reciprocal figures for 304–311, 314
Winkler's formula for chain links, &c. 160
Wöhler's experiments . . . 29
Working stresses, *see* Stress, working.
Wray's rule for uncemented blocks 395

Y.

Yield-point
confusion with elastic limit . 7
definition of 4
Young's modulus, *see* Modulus, elastic.

Digitized by Google

NOTES.

Digitized by Google

NOTES.

Digitized by Google

NOTES.

PRINTED BY STRANGEWAYS AND SONS, TOWER STREET,
CAMBRIDGE CIRCUS, LONDON, W.C.

Digitized by Google

Digitized by Google

89078542289

b89078542289a

Digitized by Google